MAINTENANCE · 539 ENGINES

MAINTENANCE

MANUAL

Alco DIESEL-ELECTRIC

660-HP SWITCHER

1000-HP SWITCHER

1000-HP ROAD SWITCHER

AMERICAN LOCOMOTIVE COMPANY
GENERAL ELECTRIC COMPANY
SCHENECTADY, N. Y.

MAINTENANCE

MANUAL

Alco

DIESEL-ELECTRIC

GE

660-HP SWITCHER

1000-HP SWITCHER

1000-HP ROAD SWITCHER

AMERICAN LOCOMOTIVE COMPANY
GENERAL ELECTRIC COMPANY
SCHENECTADY, N. Y.

INTENANCE

MANUAL

Alco
DIESEL-ELECTRIC

660-HP SWITCHER
000-HP SWITCHER
0-HP ROAD SWITCHER

AN LOCOMOTIVE COMPANY
AL ELECTRIC COMPANY
SCHENECTADY, N. Y.

MAINTENANCE

MANUAL

Alco
DIESEL-ELECTRIC

660-HP SWITCHER

1000-HP SWITCHER

1000-HP ROAD SWITCHER

AMERICAN LOCOMOTIVE COMPANY
GENERAL ELECTRIC COMPANY
SCHENECTADY, N. Y.

MAINTENANCE MANUAL

TP-700

This manual, written for Mechanical and Electrical Maintenance personnel, describes basic procedures to be followed in the overhaul of Switcher and Road Switcher Locomotives equipped with Model 539 Diesel engines.

Information furnished is based on locomotive construction as of date of publication. Figures or illustrations included in the text are for reference only and cannot be used for ordering renewal parts.

AMERICAN LOCOMOTIVE COMPANY
GENERAL ELECTRIC COMPANY
Schenectady 5, New York

Printed in U.S.A. 1-52

TABLE OF CONTENTS

SECTION	PAGES
General Data	3- 43
Diesel Engine	101- 280
Fuel Oil System	301- 313
Lubricating Oil System	401- 411
Cooling Water System	501- 508
Air System	601- 614
Chassis	701- 736
General Maintenance of Electrical Rotating Apparatus	801- 841
Traction Generators	901- 920
Traction Motors	1001-1047
Exciter-Auxiliary Generator Set	1101-1125
Radiator Fan Gear Unit	1201-1226
Control Equipment	1301-1310
Contactors	1401
Controllers	1501-1503
Instruments, Type "DO"	1601
Interlocks	1701
Magnet Valves	1801-1805
Operating Mechanisms	1901
Relays	2001-2036
Resistors	2101-2116
Electro-Pneumatic Reverser	2201-2203
Switches	2301-2302
Index	2401-2411

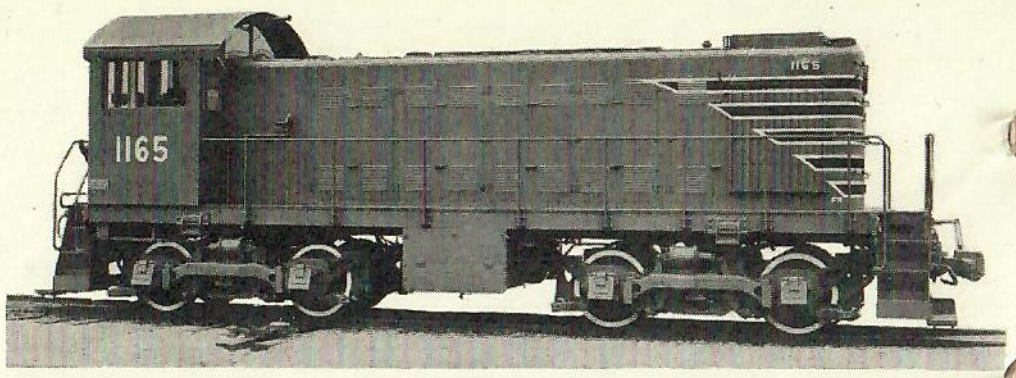

660 — HP SWITCHER

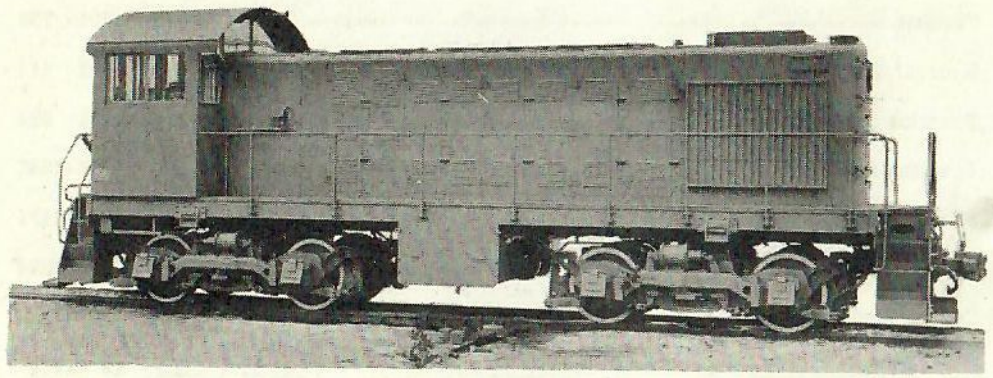

1000 — HP SWITCHER

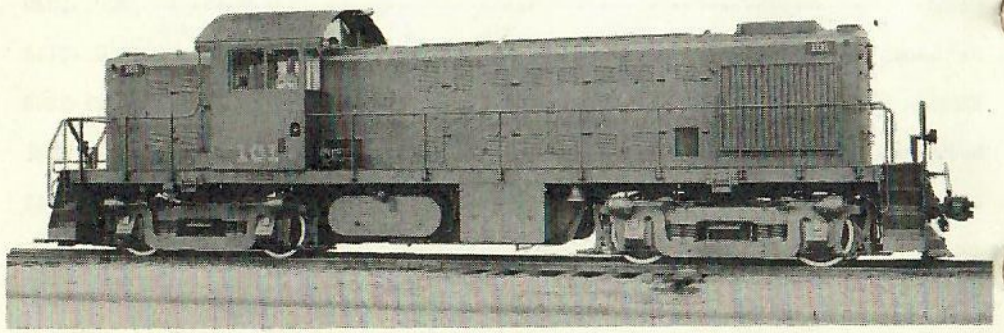

1000 — HP ROAD SWITCHER

GENERAL DATA

DESCRIPTION OF LOCOMOTIVE

A Diesel engine drives a direct-connected generator that supplies electric power through suitable control devices to traction motors mounted on the locomotive trucks.

Switcher locomotives, using either a 660 BHP or a 1000 BHP Diesel engine, are designed primarily for yard work. Road switcher locomotives, using a 1000 BHP Diesel engine, are designed for freight, passenger and switching service. Controls may be applied for multiple-unit operation of two or more units controlled from one cab.

The engine and generator, built as a unit assembly, are mounted on an underframe of built up welded steel construction.

Two four-wheel trucks having a total of four traction motors carry the entire weight of the locomotive.

The operating cab on the switcher is at the rear end of the locomotive while on the road switcher the cab is located between the low hood covering the power plant equipment in front of the cab and a low hood, providing space for train steam heating boiler, in the back of the cab.

The section of the hood covering the engine-generator set is removable. The radiators and fan are mounted in a fixed portion of the hood at the front end of the locomotive while the control equipment is located in a fixed portion of the hood next to the cab. The hood is designed to provide maximum visibility and is equipped with hatches on the top and doors on the sides through which the engine and auxiliary equipment may be maintained. Louvers are also provided to give adequate engine room ventilation.

LOCOMOTIVE GENERAL DATA

	660 HP Switcher	1000 HP Switcher	1000 HP Road Switcher
Diesel Engine B.H.P.	660	1000	1000
No. Traction Motors	4	4	4
Max. Speed Restr. -MPH (With 75/16 Gearing)	60	60	60
No. Driving Wheels-Prs.	4	4	4
Dia. Driving Wheels	40"	40"	40"
Wgt. on Drivers-Tons	99	115	120
Total Loco. Wgt.-Tons	99	115	120
Wheel Base			
Each Truck (rigid)	8' 0"	8' 0"	9' 4"
Total Locomotive	30' 0"	30' 6"	40' 4"
Max. Overall Dimen. Drg.			
Height	14' 4"	14' 6"	14' 6"
Width	10' 0"	10' 0"	10' 0"
Length (Inside Knuckles)	44' 5-3/4"	45' 5-3/4"	54' 11-3/4"
Starting Tractive Effort (At 30% Adhesion)	59,700	69,000	72,400
Min. Radius Curvature (Locomotive Alone)	50'	50'	100'

	660 HP Switcher	1000 HP Switcher	1000 HP Road Switcher
Brake Equipment (W.A.B. Schedule)	14 EL	14 EL	14 EL
Supplies (Sys. Capacity)			
Lube Oil - Gals.	80	80	80
Fuel - Gals.	635	635	--
Engine Cooling Water - Gals.	220	240	240
Water Expansion Tank - Gals.	50	50	50
Sand - Cu. Ft.	27	27	27
If Boiler is Applied			
Boiler Water Tank - Gals	--	--	800
Fuel Oil Tank - Gals.	--	--	800
Boiler Not Applied			
Fuel Oil Tank (2) Gals.	--	--	1600
Air Compressor-Gals. Oil	3	3	3
Journal Size	6-1/2" x 12" 7" x 14"	6-1/2" x 12" 7" x 14"	6-1/2" x 12" 7" x 14"

AUXILIARY DRIVES AND HP REQUIREMENTS

This is the sum of all auxiliaries operating from the engine. These vary, but typical values are as follows:

	HP
Compressor at 740 RPM against full pressure	54
Traction motor blowers (2) at full speed	11
Radiator Fan - 660 HP Engine	14
- 1000 HP Engine	20
Aux. Generator for control, battery charge, lights, etc.	Idling - 7 Max. RPM - 7

ROTATING APPARATUS MAX. SPEED

	RPM
Diesel Engine	740
Traction Motor Blower	2160
Radiator Fan - 660 HP Engine	900
- 1000 HP Engine	1000
Aux. Generator and Exciter	1776
Air Compressor	740
Motor Driven Fuel Pump	1725
Cab Heater Motor	2500
Traction Generator	740
Lubricating Oil Pump	1675
Water Pump	1775

LOCOMOTIVE MAINTENANCE

A major overhauling of the locomotive should take place approximately every two years, depending on the apparent condition of the Diesel engine and certain variable factors such as wheel turning and truck repair.

Work on pistons and cylinder heads may often be done on a rotational basis, i.e. by changing out successive pistons during monthly inspections. This can be done more easily if a spare piston and rod assembly is always on hand ready to be installed in the engine. A spare cylinder head assembly should also be kept in readiness.

However, the time does come when the engine and chassis equipment requires a major overhaul.

Special provisions should always be made for doing work on the engine. An overhead joist of some form is a necessity. A truck type hoist may be used if its boom is of sufficient length; however, a small overhead crane, possibly of the monorail type, will be found more satisfactory. The shop should be well lighted and clean as a large part of the work is done on top of the locomotive if the engine is not removed.

Removal of the engine hood is easily done, and will facilitate work if the entire engine is to be dismantled.

MECHANICAL

Air Compressor

Make orifice test and overhaul compressor if necessary.

Breather Traps

Remove and clean crankcase breather traps.

Camshaft

Inspect cams, cam rollers and push rod lifters.

Cleaning

Clean interior of engine thoroughly; also, clean and inspect locomotive frame, deck plates, etc.

Connecting Rod Bearings

Remove and inspect bearing surface.

Crankshaft

Inspect journals for scoring, wear and other defects, check deflection.

Cylinder Heads

Clean carbon and grind valves. Check valve guide wear. Spot in male compression ring fit with surface plate, adjust valve clearance.

Cylinder Liners

Check wear and renew seal rings. Turn liner one quarter turn when reapplying.

Drive Shaft Bearings

Examine auxiliary generator and exciter and traction motor blower drive shaft bearings.

Flexible Couplings

Inspect flexible couplings at air compressor and at radiator fan for worn parts.

Fuel Booster Pump

Inspect gear pump and shaft packing.

Gauges

Check calibration of temperature and pressure gauges.

Gear Train

Inspect for teeth wear and clearance.

Governor and Fuel Pump Drive

Inspect cams, gear clearance and bolts in drive shaft flange.

Governor

Remove, dismantle, clean and adjust.

Linkage

Take up slack in throttle and governor linkage installing new pins and bushings as necessary.

Lube Oil Pump

Remove and dismantle lube oil pump and drive for inspection. Check gear clearances and condition of drive pin; also buttons on end of crankshaft.

Main Bearings

Remove and inspect bearing surface and locking lugs.

Main Reservoirs

Hydrostatic and hammer test.

Nozzles and Pumps

Remove and test, check pump timing after pumps are installed on engine.

Piston Rings

Clean and check ring groove wear, apply new rings.

Pulleys

Examine condition and check wear of auxiliary drive pulleys.

Push Rods

Check for straightness.

Radiators

Remove and clean oil and water radiators, cores and headers.

Secondary Fuel Filter

Renew felt element (if used).

Water Pump

Remove and dismantle. Inspect and repair.

Trucks

Inspect traction motor air ducts, side bearings, center castings, wheels for ICC defects, gears and pinions, motor suspension bearings, etc. when trucks are removed.

Turbocharger

Remove, dismantle and clean turbocharger. Check bearing wear and renew if necessary.

ELECTRICAL

Ammeter

Check calibration of ammeter.

Axle Bearing

Measure traction motor axle bearing clearance and end play.

Battery

Remove and clean; repaint leads; recondition terminals; test by cycling.

Wiring

Examine, clean and repaint all exposed wiring.

The following items should be inspected and repaired, if necessary, to assure another year of operation:

Auxiliary Generator - Exciter Set
Cab Heater Motor
Controller
Detroit Pressure Switch
Electro-pneumatic Contactors
Fuel Pump Motor
Governor Shut Down Solenoid
Magnet Valves
Magnetic Contactors
Radiator Fan Gear Box
Relays
Reverser
Throttle Operator (If MU)
Traction Generator
Traction Motor and Gears
Voltage Regulator

DIESEL ENGINE

The Diesel engine is a 6 cylinder "In-line" engine having a bore and stroke of 12-1/2" x 13", either turbocharged or non-turbocharged. It is of four stroke cycle having an open combustion chamber with solid fuel injection. An individual fuel injection pump and nozzle are provided for each cylinder.

The engine has a speed range of 275 to 740 RPM and is governed by a Woodward hydraulic governor.

Each cylinder requires two engine revolutions or four strokes of the piston to complete one working cycle. One complete piston working cycle as follows:

On the first, or suction stroke, air is drawn into the cylinder. On the second, or compression stroke, this air is compressed by the rising piston to a pressure of about 450 pounds per square inch, which raises the temperature in the cylinder to about 1000 degrees F. Just before the end of the compression stroke, fuel is injected into the cylinder where it is ignited by the heat of the compressed air. The heat of the resulting combustion and the expansion of the gases furnish the power for the third, or working stroke. On the fourth, or exhaust stroke, the piston expels the gases from the cylinder and the cycle is complete.

The rate of injection of the fuel is so arranged that the maximum pressures do not exceed a safe working average. This assures a long life for all bearings and reciprocating parts.

The turbocharger engine functions in the same manner as described, except that air is blown in under pressure at the time the piston is traveling down on its "suction" stroke. This makes it possible for a larger quantity of air and fuel oil to be combined in the power stroke, thereby producing more power. This system of turbocharging holds the maximum pressures and temperatures down to normal conditions.

The two ends of the engine are known as GENERATOR end and FREE end. The right hand side of the engine is determined by looking from the GENERATOR end towards the FREE end and is also known as the "A" side, whereas the left side of the engine is known as the "B" side. Cylinder numbering begins with 1 at the FREE end, runs consecutively down to the GENERATOR end.

DIESEL ENGINE GENERAL DATA

	660 HP Switcher	1000 HP Switcher and Road Switcher
Engine HP	660	1000
Rated Engine Speed	740 RPM	740 RPM
Idling Speed	275 RPM	275 RPM
Bore and Stroke	12-1/2 x 13	12-1/2 x 13
No. of Cylinders	6	6
Cu. In. Displacement	9,572	9,572
Turbocharger	No	Yes
Nozzle Opening Pressure		
New & Reconditioned	3800 PSI	3800 PSI
Desired Operating	3600 PSI	3600 PSI
Fuel Pump Timing	Cyl. No. 1 2 3 4 5 6 BTC 17° 16° 16° 16° 16° 17°	
Max. Fuel Pump Rack Setting	24 MM	22.5 MM
Valve Timing		
Air Valve Opens	15° BTC	80° BTC
Air Valve Closes	45° ABC	35° ABC
Exhaust Valve Opens	50° BBC	50° BBC
Exhaust Valve Closes	20° ATC	54° ATC
Firing Order	1-3-5-6-4-2	1-3-5-6-4-2

TABLE OF CLEARANCES

ITEM	NEW	LIMITS
Valve Tappet		
Air Inlet Valve	.016 hot or cold	
Exhaust Valve	.016 hot or cold	
Valve Guides		
Air Inlet Valve	.003 - .006	.015
Exhaust Valve	.007 - .010	.015
Valve Lever Bushings		
Air Inlet Valve Lever	.003 - .005	.010
Exhaust Valve Lever	.004 - .006	.010
Push Rod Lifter Bushings		
Shaft	.0015 - .0035	.006
Roller Pin	.002 - .004	.007
Main Bearings		
Running Clearance	.006 - .010	.014
Crankshaft Thrust		
Total	.009 - .015	.025
Connecting Rod Bearings		
Running Clearance	.006 - .009	.011
Piston Pins		
In Bushings	.003 - .0045	.008
In Bosses	.0005 - .002	.004

ITEM	NEW	LIMITS
Camshaft Bearings		
All Bushings	.0045 - .007	.014
End Bearing	.006 - .008	.015
Total Thrust	.006 - .015	.025
Fuel Pump Shaft Bearings		
F.P. Camshaft Bushings	.003 - .0055	.009
End Bearing	.006 - .008	.015
Thrust Bushing	.0035 - .007	.014
Total Thrust	.006 - .015	.025
Pistons		
Diameter at Skirt Bottom	12.481 - 12.482	12.476
Head Clearance (vertical)	3/16	
Piston Rings (Measured in a 12.500" Dia. Liner)		
Compression (gap)	.035 - .050	100% inc.
Compression (side)	.0075 - .0105	100% inc.
Oil Scraper (gap)	.035 - .050	50% inc.
Oil Scraper (side)	.005 - .0075	50% inc.
Gear Backlash Between Each Pair of Gears		
Gear Train	.008 - .011	50% inc.
Governor Bevel Gears	.012 - .015	---
Governor Drive Gears	.0025 - .0055	---
Lube Oil Pump Drive Gears	.003 - .006	50% inc.
Water Pump Drive Gear	.008 - .011	50% inc.
Water Pump		
Capacity	300 GPM at 740 Engine RPM	
Pressure	Idle - 8 PSI	
	Full Load - 25 PSI	

ITEM	NEW	LIMITS
Cylinder Liner		
Diameter	12.502 - 12.4985	12.580
Top & Bottom Fit	.000 - .001	---
Lubricating Oil Pump		
Delivery	64 GPM at 740 Engine RPM	
Pressure	Idle - 26 PSI Full Load - 75 PSI (By-pass valve set at 75 PSI)	
Fuel Booster Pump		
Delivery	3-1/2 GPM at 1725 RPM	

WEIGHTS FOR LIFTING

Item	Pounds		
	660 HP Switcher	1000 HP Switcher	1000 HP Road Switcher
Air Compressor	1400	1400	1400
Axle Gear	500	500	500
Battery - 32 Cells (17 Plate)	2136	2136	2136
Battery Tray - 4 Cells	267	267	267
Booster Pump	66	66	66
Camshaft - Fuel (Without Gear)	56	56	56
Camshaft - Valve (Without Gear)	250	250	250

Item	Pounds		
	660 HP Switcher	1000 HP Switcher	1000 HP Road Switcher
Camshaft Gear	185	185	185
Crankshaft	3,950	3,950	3,950
Crankshaft Gear	102	102	102
Cylinder Head Assembly	429	429	429
Cylinder Liner	260	260	260
Engine	33,700	34,800	34,800
Engine Base	9,365	9,365	9,365
Engine Frame	6,519	6,519	6,519
Engine, Generator and Muffler	41,050	--	--
Engine, Generator and Turbocharger	--	45,800	45,800
Exciter - Aux. Gen. Set (GMG 139)	800	800	800
Fuel Nozzle	12	12	12
Fuel Pump	32	32	32
Fuel Pump Assembly (Complete)	1,000	1,000	1,000
Generator, Traction	7,000	9,200	9,200
Governor	80	80	80

Item	Pounds		
	660 HP Switcher	1000 HP Switcher	1000 HP Road Switcher
Idler Gear	54	54	54
Loco. - Less Trucks-Tons (Light)	59.1	76.1	73
Loco. - Light - Tons	93	110	112.4
Loco. - With Supplies-Tons	98	115	121
Lube Oil Pump Assembly	100	100	100
Muffler	350	--	--
Piston	104	104	104
Piston Pin	32	32	32
Piston, Rod with Cap and Bearings	221	221	221
Radiator Fan Gear Box Unit	145	145	145
Rocker Box Assembly	200	200	200
Traction Motor	5,600	5,600	5,600
Traction Motor Blower	360	360	360
Traction Motor Pinion	50	50	50
Truck - without Motors-Tons	12	12	12
Turbocharger	--	1,800	1,800
Water Pump	114	114	114
Water Pump Gear	19	19	19
Wheel (Motor Truck)	1000	1000	1000
Wheel and Axle Assembly (with Gear)	3,800	3,800	3,800

NOTES

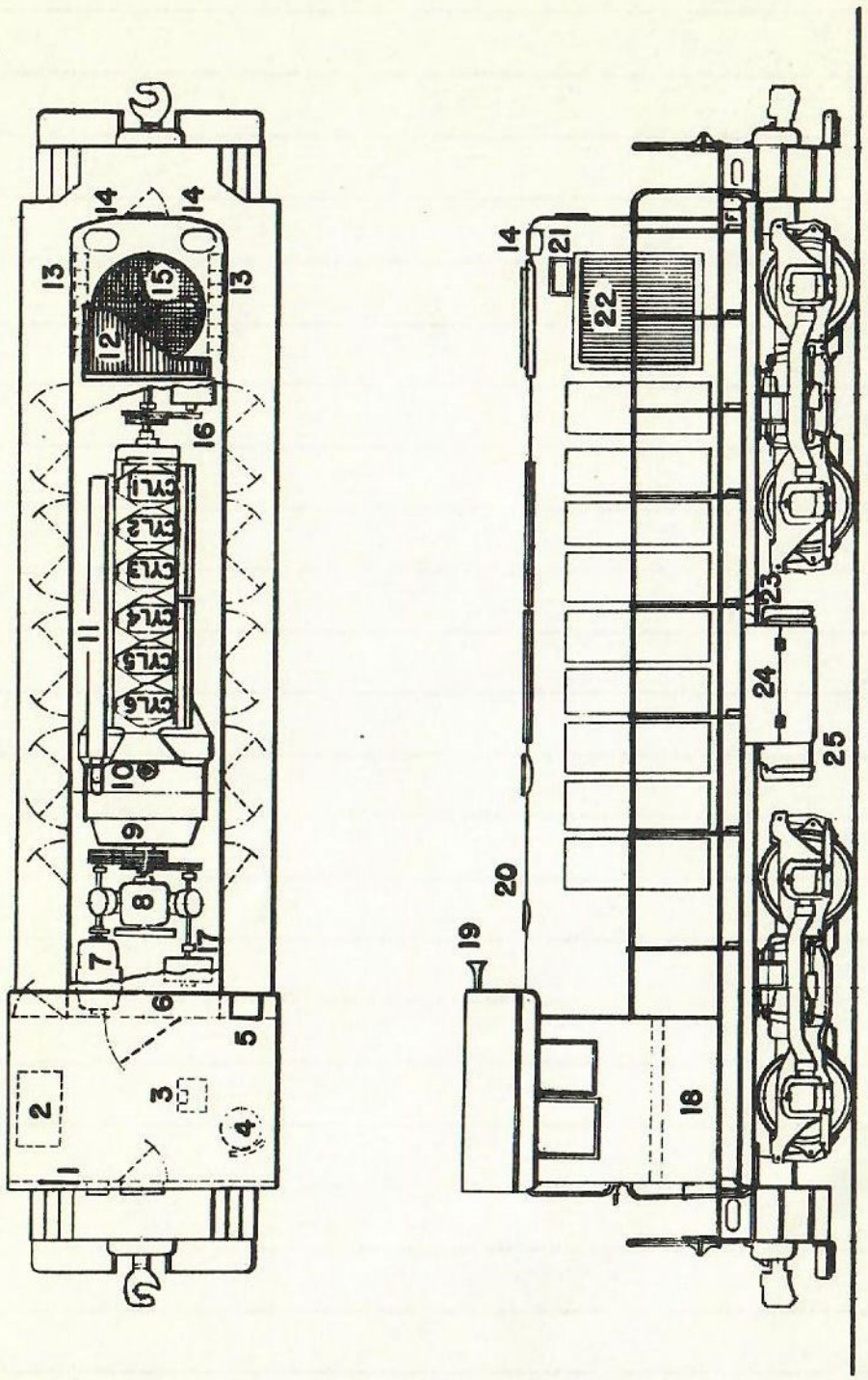

FIG. 1-0, PART I
LOCATION OF APPARATUS
660 HP SWITCHER

1. Handbrake
2. Fireman's Seat Box
3. Control Stand
4. Engineer's Seat
5. Cab Heater
6. Contactor Compartment
7. Auxiliary Generator and Exciter
8. Air Compressor
9. Main Generator
10. Muffler
11. Engine
12. Fan Opening Shutter
13. Radiators
14. Front Sand Boxes
15. Radiator Fan
16. Front Traction Motor Blower
17. Rear Traction Motor Blower
18. Fuel Tank
19. Horn
20. Rear Sand Box
21. Number Lights
22. Radiator Shutters
23. Bell
24. Battery
25. Main Reservoir

FIG. 1-0, PART II
LOCATION OF APPARATUS
660 HP SWITCHER

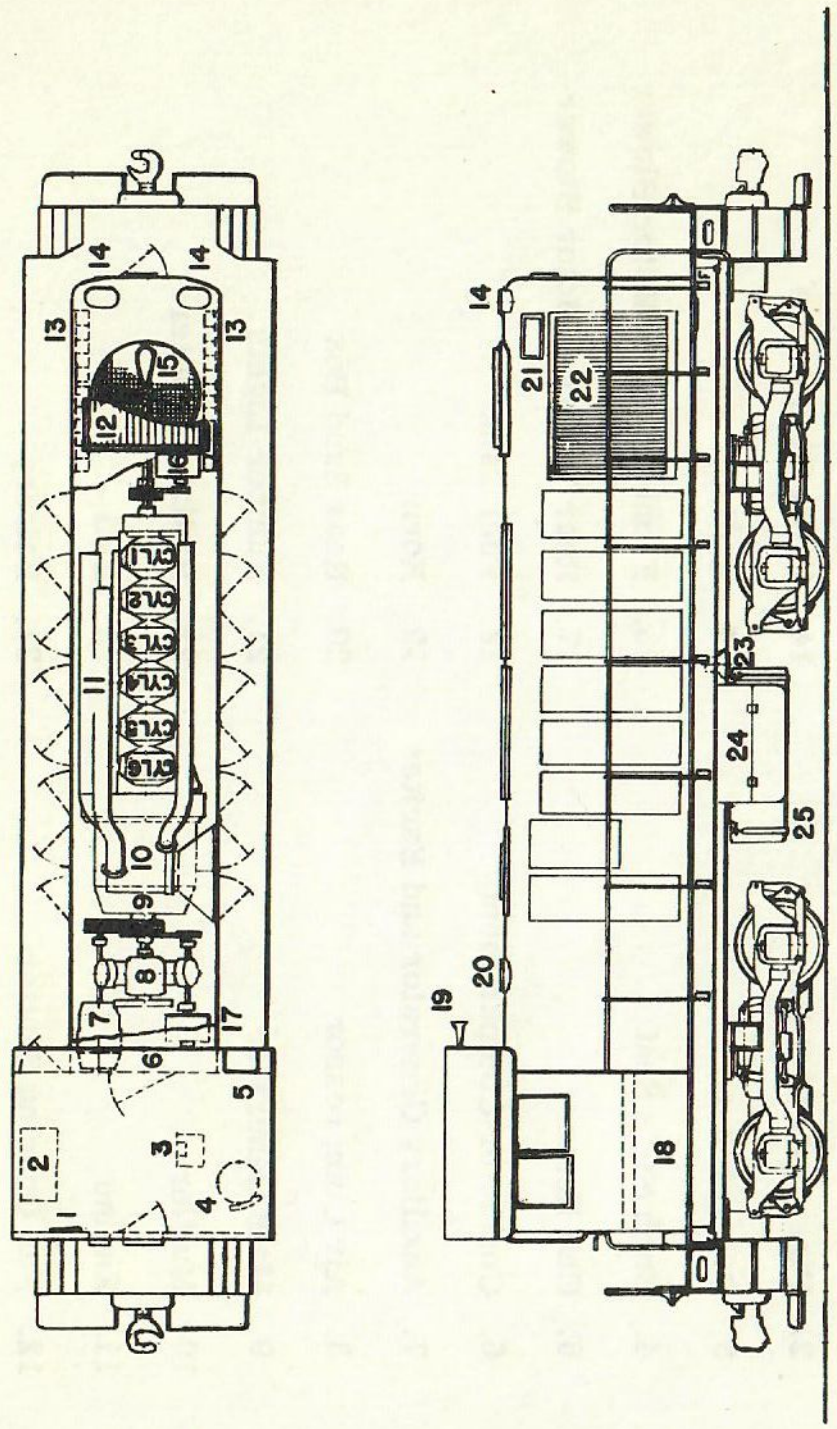

FIG. 2-0, PART I
LOCATION OF APPARATUS
1000 HP SWITCHER

1. Handbrake
2. Fireman's Seat Box
3. Control Stand
4. Engineer's Seat
5. Cab Heater
6. Contactor Compartment
7. Auxiliary Generator and Exciter
8. Air Compressor
9. Main Generator
10. Turbocharger
11. Engine
12. Fan Opening Shutter
13. Radiators
14. Front Sand Boxes
15. Radiator Fan
16. Front Traction Motor Blower
17. Rear Traction Motor Blower
18. Fuel Tank
19. Horn
20. Rear Sand Box
21. Number Lights
22. Radiator Shutters
23. Bell
24. Battery
25. Main Reservoir

FIG. 2-0, PART II
LOCATION OF APPARATUS
1000 HP SWITCHER

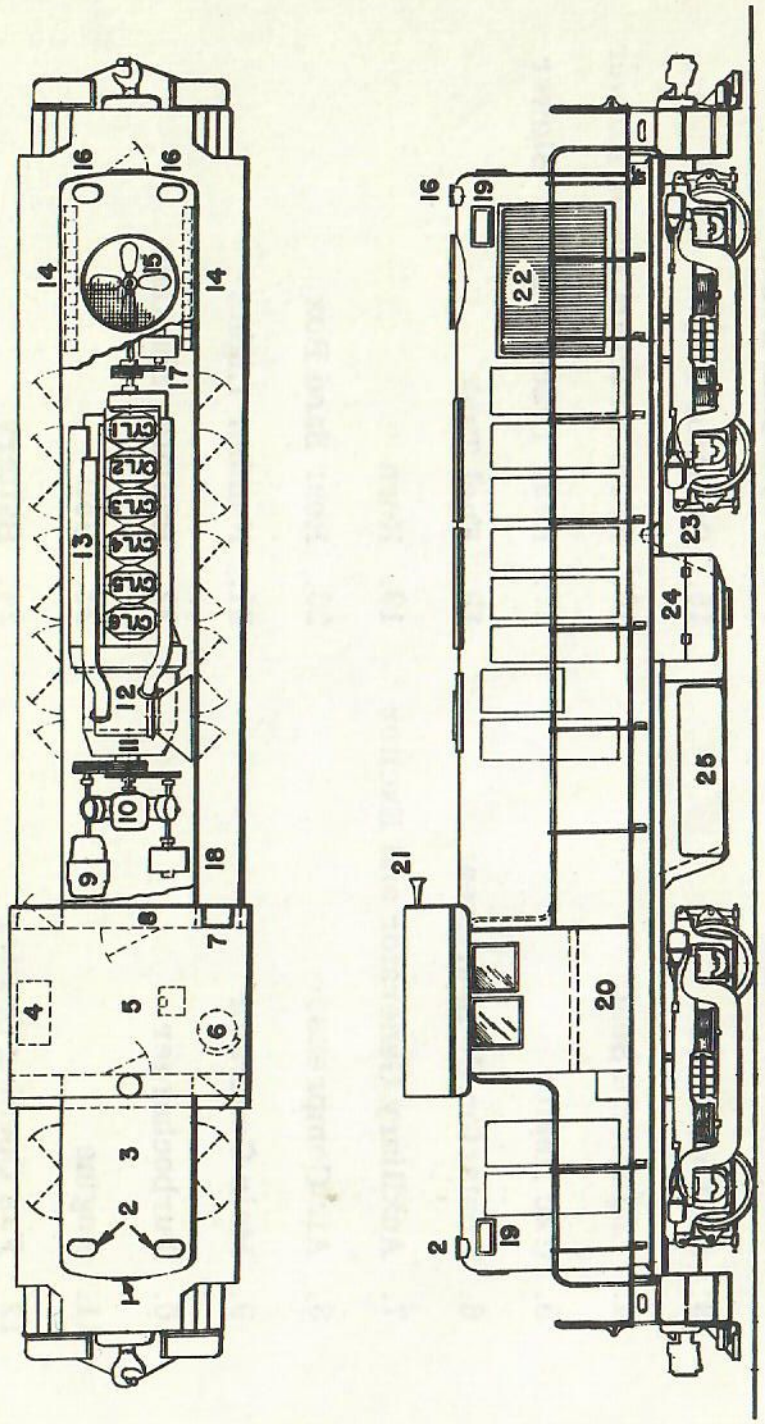

FIG. 3-0, PART I
LOCATION OF APPARATUS
1000 HP ROAD SWITCHER

1. Handbrake
2. Rear Sand Boxes
3. Steam Generator Compartment
4. Fireman's Seat Box
5. Control Stand
6. Engineer's Seat
7. Cab Heater
8. Contactor Compartment
9. Auxiliary Generator and Exciter
10. Air Compressor
11. Main Generator
12. Turbocharger
13. Engine
14. Radiators
15. Radiator Fan
16. Front Sand Boxes
17. Front Traction Motor Blower
18. Rear Traction Motor Blower
19. Number Lights
20. Steam Generator Water Tank or Fuel Tank
21. Horn
22. Radiator Shutters
23. Bell
24. Battery
25. Fuel Tank

FIG. 3-0, PART II
LOCATION OF APPARATUS
1000 HP ROAD SWITCHER

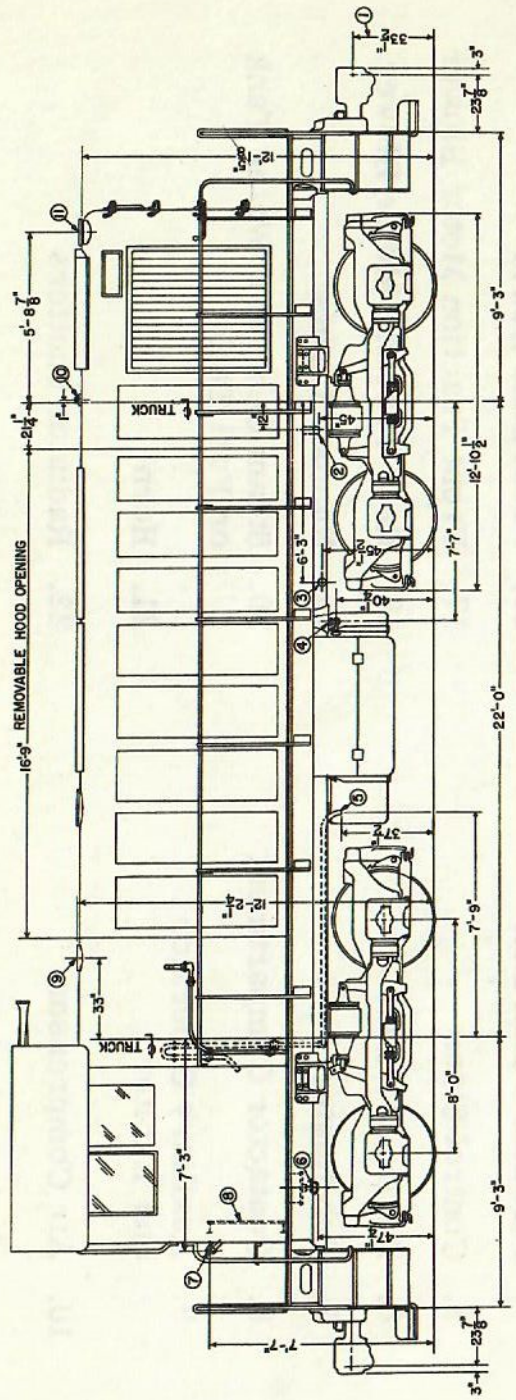

FIG. 4-0, PART I
FILLERS AND DRAINS
660 HP ENGINE

1. Coupler Height - Drawing Dimension.
2. Water Expansion Tank Overflow - L.S. - 3/4" Pipe.
3. Engine Water Filler and Drain - L.S. - NYABCO Hose Coupling.
4. Engine Lube Oil Drain - L.S. - 1-1/2" Pipe with Cap and Valve.
5. Fuel Tank Overflow - R.S. - 2" Pipe.
6. Fuel Tank Drain - L.S. - 1-1/2" Globe Valve.
7. Fuel Tank Filler - R.S. - 3" Pipe with Cap.
8. Fuel Tank Gauge Glass - 5/8" O.D. 19-5/8" Long.
9. Rear Sand Box on Locomotive Centerline - 9-3/4" Diameter. Filling Hole - 13-1/2 CU. FT. Capacity.
10. Engine Water Roof Filler on Locomotive Centerline - 2" Pipe with Cap.
11. Front Sand Boxes - One Each Side - 9-5/8" x 16-5/8" Openings 6-3/4" CU. FT. Capacity Each Side.

FIG. 4-0, PART II
FILLERS AND DRAINS
660 HP ENGINE

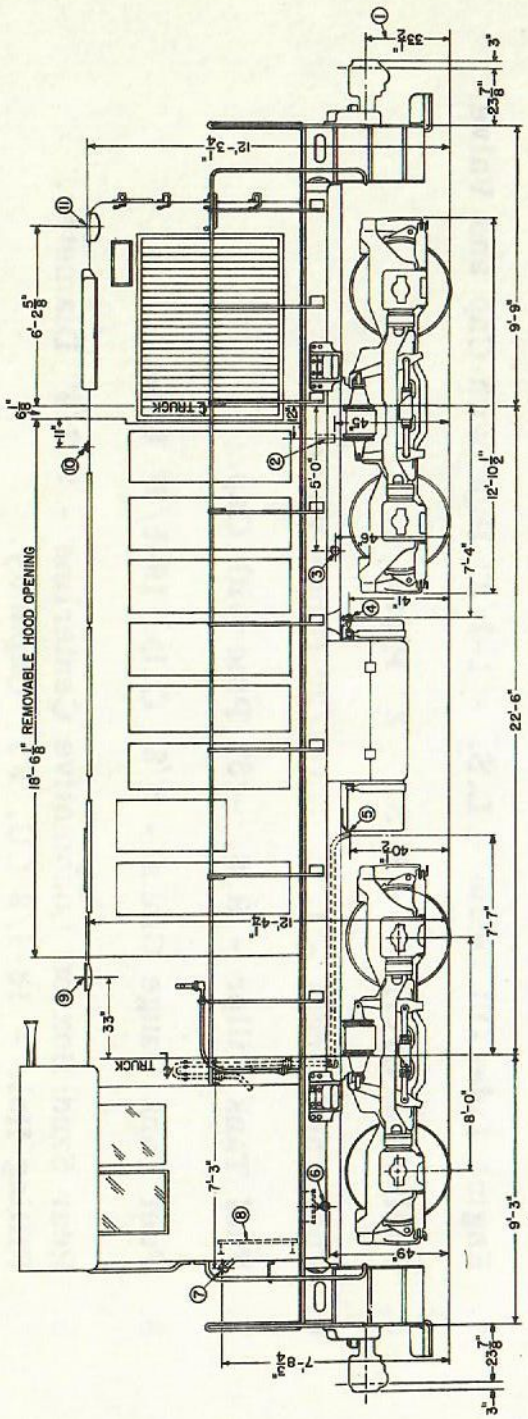

FIG. 5-0, PART I
FILLERS AND DRAINS
1000 HP SWITCHER

1. Coupler Height - Drawing Dimension.
2. Water Expansion Tank Overflow - L.S. - 3/4" Pipe.
3. Engine Water Filler and Drain - L.S. - NYABCO Hose Couplings.
4. Engine Lube Oil Drain - L.S. - 1-1/2" Pipe with Cap and Valve.
5. Fuel Tank Overflow - R.S. - 2" Pipe.
6. Fuel Tank Drain - L.S. - 1-1/2" Globe Valve.
7. Fuel Tank Filler - R.S. - 3" Pipe with Cap.
8. Fuel Level Gauge Glass - 5/8" O.D. 19-5/8" Long.
9. Rear Sand Box on Locomotive Centerline - 9-3/4" Diameter. Filling Hole - 13-1/2 CU. FT. Capacity.
10. Engine Water Roof Filler on Locomotive Centerline - 2" Pipe with Cap.
11. Front Sand Boxes - One Each Side - 9-5/8" x 16-5/8" Openings - 6-3/4" CU. FT. Capacity Each Side.

FIG. 5-0, PART II
FILLERS AND DRAINS
1000 HP SWITCHER

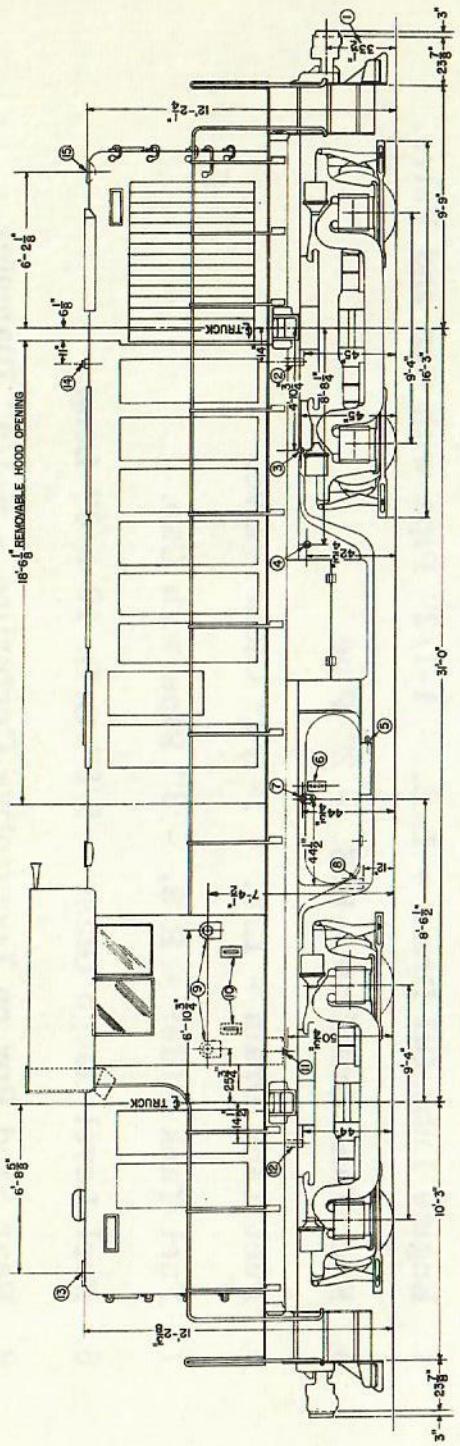

FIG. 6-0, PART I
FILLERS AND DRAINS
1000 HP ROAD SWITCHER

1. Coupler Height - Drawing Dimension.
2. Water Expansion Tank Overflow - L.S. - 3/4" Pipe.
3. Engine Water Filler and Drain - L.S. - NYABCO Hose Coupling.
4. Engine Lube Oil Drain - L.S. - 1-1/2" Pipe with Cap and Valve.
5. Lower Fuel Tank Drain - 1-1/2" Valve.
6. Lower Fuel Tank Gauge.
7. Lower Fuel Tank Filler-R.S. and L.S. -4" Pipe with plug when upper tank is used for fuel. When upper tank is used for steam generator water, remove Protecto-Seals #384 from upper tank filling pipes and apply them to lower tank. Apply plugs in upper tank.
8. Lower Fuel Tank Overflow - L.S. - 2" Pipe.
9. Upper Fuel Tank Filler - R.S. and L.S. - 4" Pipe with #384 Protecto-Seals. This tank is used for water when steam generator is applied.
10. Upper Tank Gauges,
11. Upper Tank Drain - L.S. - 1-1/2" Pipe with Plug.
12. Upper Tank Overflow - L.S. -2" Pipe.
13. Rear Sand Box on Locomotive Centerline - 9-3/8" Square Filling Hole - 14-1/2" CU. FT. Capacity.
14. Engine Water Roof Filler on Locomotive Centerline - 2" Pipe with Cap.
15. Front Sand Boxes - One each side- 9-5/8" x 16-5/8" Openings-6-3/4" CU. FT. Capacity Each Side.

FIG. 6-0, PART II
FILLERS AND DRAINS
1000 HP ROAD SWITCHER

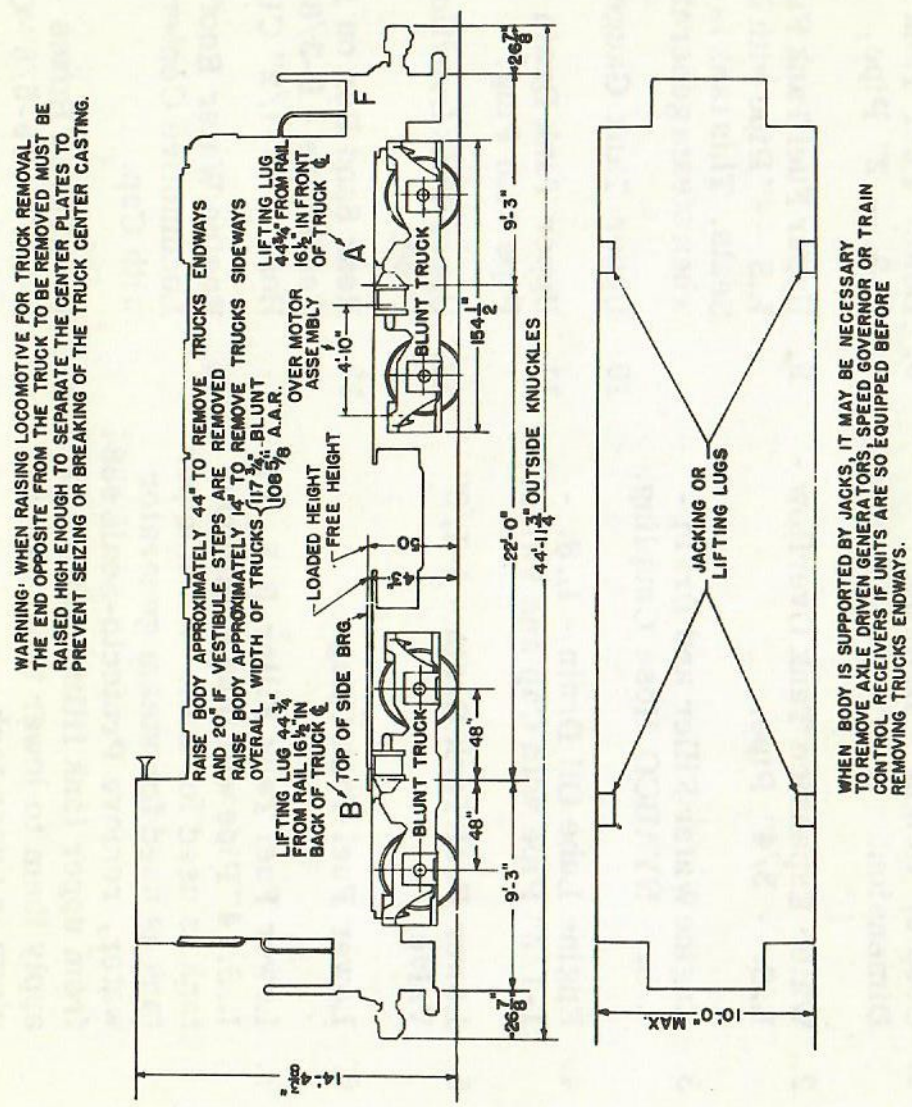

FIG. 7-0, PART I
JACKING AND LIFTING
660 HP SWITCHER

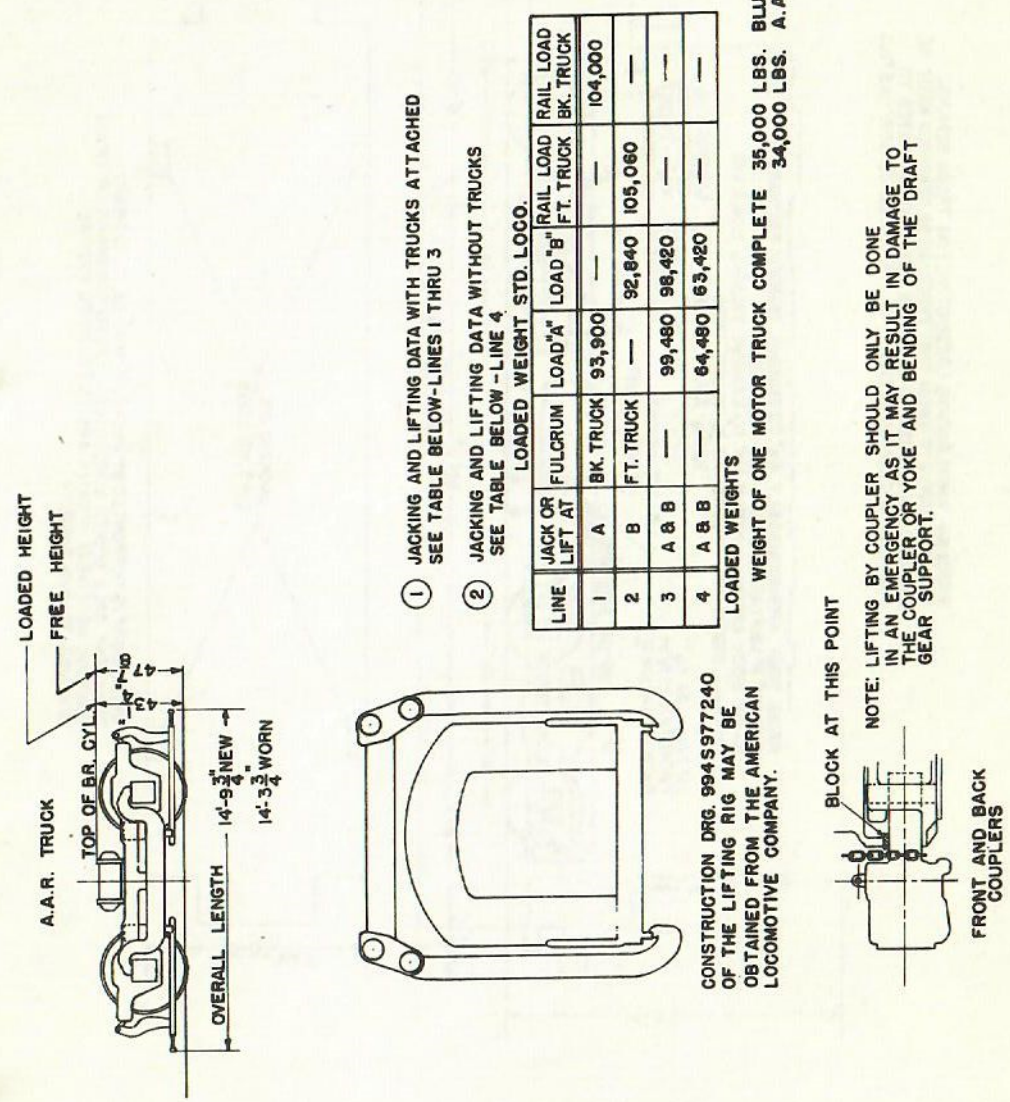

① JACKING AND LIFTING DATA WITH TRUCKS ATTACHED SEE TABLE BELOW-LINES 1 THRU 3

② JACKING AND LIFTING DATA WITHOUT TRUCKS SEE TABLE BELOW-LINE 4

LINE	JACK OR LIFT AT	LOADED WEIGHT STD. LOCO. FULCRUM	LOAD "A"	LOAD "B"	RAIL LOAD FT. TRUCK	RAIL LOAD BK. TRUCK
1	A	BK. TRUCK	93,900	—	—	104,000
2	B	FT. TRUCK	—	92,640	105,060	—
3	A & B	FT. TRUCK	99,480	98,420	—	—
4	A & B	—	64,480	63,420	—	—

LOADED WEIGHTS
WEIGHT OF ONE MOTOR TRUCK COMPLETE 35,000 LBS. BLUNT
34,000 LBS. A.A.R.

NOTE: LIFTING BY COUPLER SHOULD ONLY BE DONE IN AN EMERGENCY AS IT MAY RESULT IN DAMAGE TO THE COUPLER OR YOKE AND BENDING OF THE DRAFT GEAR SUPPORT.

FIG. 7-0, PART II
JACKING AND LIFTING
660 HP SWITCHER

WARNING: WHEN RAISING LOCOMOTIVE FOR TRUCK REMOVAL THE END OPPOSITE FROM THE TRUCK TO BE REMOVED MUST BE RAISED HIGH ENOUGH TO SEPARATE THE CENTER PLATES TO PREVENT SEIZING OR BREAKING OF THE TRUCK CENTER CASTING.

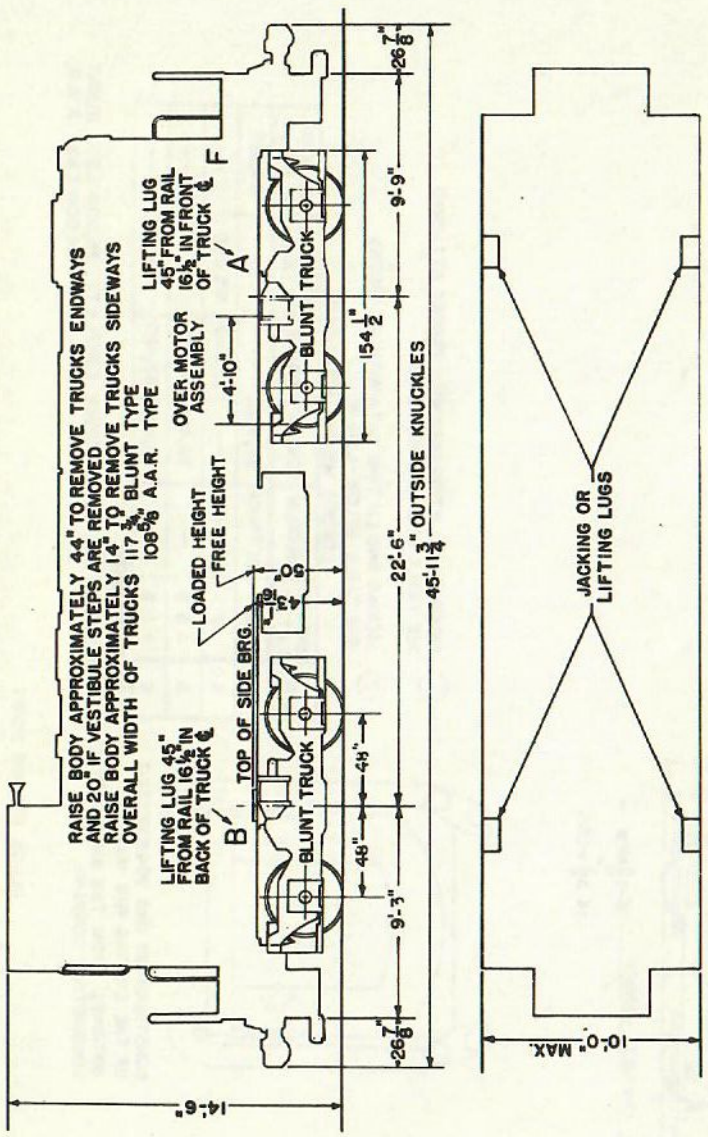

WHEN BODY IS SUPPORTED BY JACKS, IT MAY BE NECESSARY TO REMOVE AXLE DRIVEN GENERATORS, SPEED GOVERNOR OR TRAIN CONTROL RECEIVERS IF UNITS ARE SO EQUIPPED BEFORE REMOVING TRUCKS ENDWAYS.

FIG. 8-0, PART I
JACKING AND LIFTING
1000 HP SWITCHER

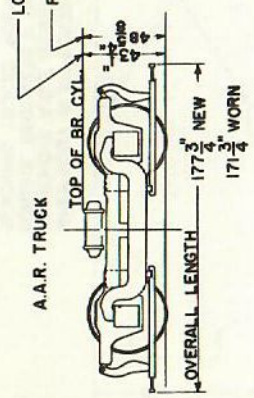

① JACKING AND LIFTING DATA WITH TRUCKS ATTACHED SEE TABLE BELOW-LINES 1 THRU 3

② JACKING AND LIFTING DATA WITHOUT TRUCKS SEE TABLE BELOW-LINE 4

LOADED WTS. STANDARD LOCO.

LINE	JACK OR LIFT AT	FULCRUM	LOAD "A"	LOAD "B"	RAIL LOAD FT. TRUCK	RAIL LOAD BK. TRUCK
1	A	BK. TRUCK	108,000	—	—	122,000
2	B	FT. TRUCK	—	109,000	121,000	—
3	A & B	—	114,500	115,500	—	—
4	A & B	—	79,500	80,500	—	—

LOADED WEIGHTS
WEIGHT OF ONE MOTOR TRUCK COMPLETE 35,000 LBS. BLUNT
34,000 LBS. A.A.R.

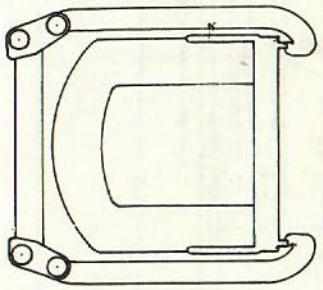

CONSTRUCTION DRG. 994S977240 OF THE LIFTING RIG MAY BE OBTAINED FROM THE AMERICAN LOCOMOTIVE COMPANY.

NOTE: LIFTING BY COUPLER SHOULD ONLY BE DONE IN AN EMERGENCY AS IT MAY RESULT IN DAMAGE TO THE COUPLER OR YOKE AND BENDING OF THE DRAFT GEAR SUPPORT.

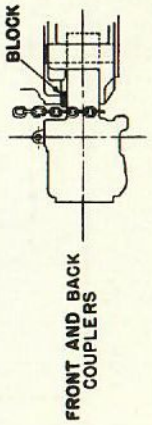

FIG. 8-0, PART II
JACKING AND LIFTING
1000 HP SWITCHER

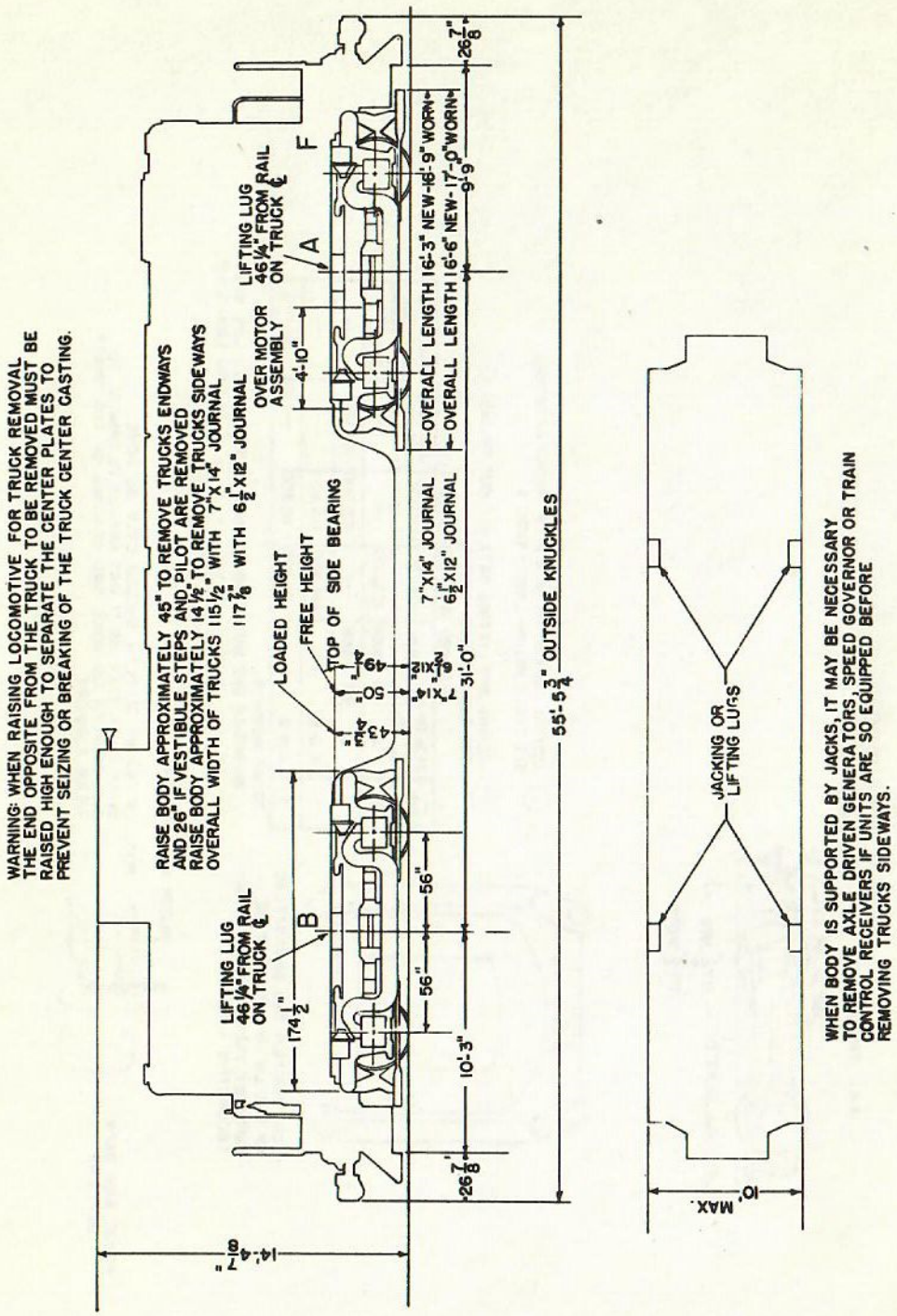

FIG. 9-0, PART I
JACKING AND LIFTING
1000 HP ROAD SWITCHER

① JACKING AND LIFTING DATA WITH TRUCKS ATTACHED
SEE TABLE BELOW-LINES 1 THRU 3

② JACKING AND LIFTING DATA WITHOUT TRUCKS
SEE TABLE BELOW-LINE 4

MAXIMUM LOADED WEIGHT

LINE	JACK OR LIFT AT	FULCRUM	LOAD "A"	LOAD "B"	RAIL LOAD FT. TRUCK	RAIL LOAD BK. TRUCK
1	A	BK. TRUCK	122700	—	—	128,500
2	B	FT. TRUCK	—	128,500	122,700	—
3	A & B	—	122,700	128,500	—	—
4	A & B	—	83,200	89,000	—	—

LOADED WEIGHTS
WEIGHT OF ONE MOTOR TRUCK COMPLETE 40,000 LBS. (7"X14" JOURNAL TRUCK) 39,500 LBS. (6½"X12" JOURNAL TRUCK)

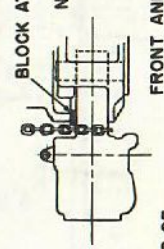

NOTE: LIFTING BY COUPLER SHOULD ONLY BE DONE IN AN EMERGENCY AS IT MAY RESULT IN DAMAGE TO THE COUPLER OR YOKE AND BENDING OF THE DRAFT GEAR SUPPORT.

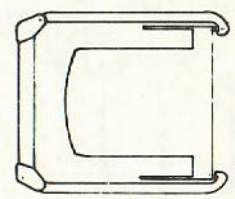

CONSTRUCTION DRG. 994 S 977240 OF THE LIFTING RIG MAY BE OBTAINED FROM THE AMERICAN LOCOMOTIVE COMPANY.

FIG. 9-0, PART II
JACKING AND LIFTING
1000 HP ROAD SWITCHER

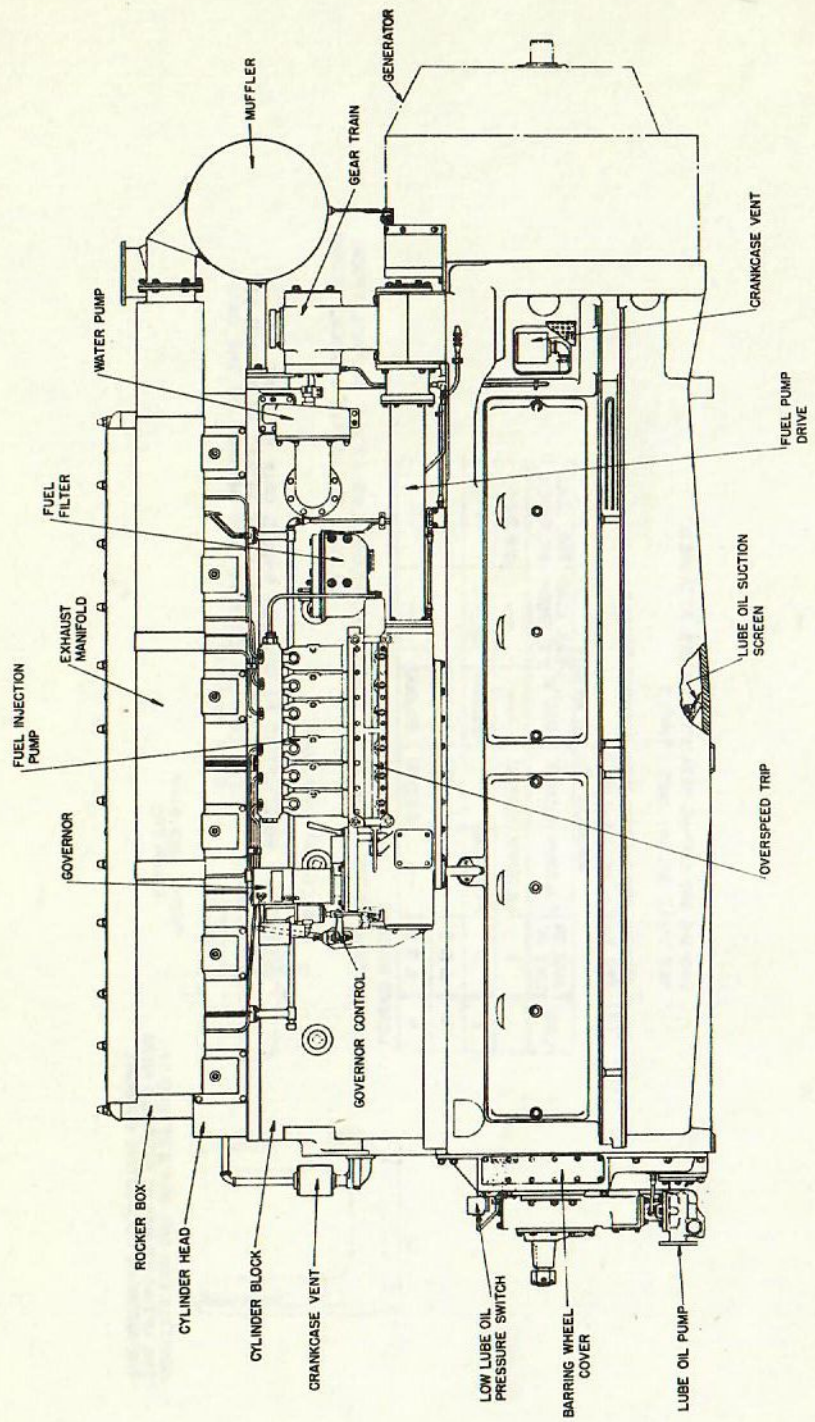

FIG. 10-0
ELEVATION - 660 HP ENGINE

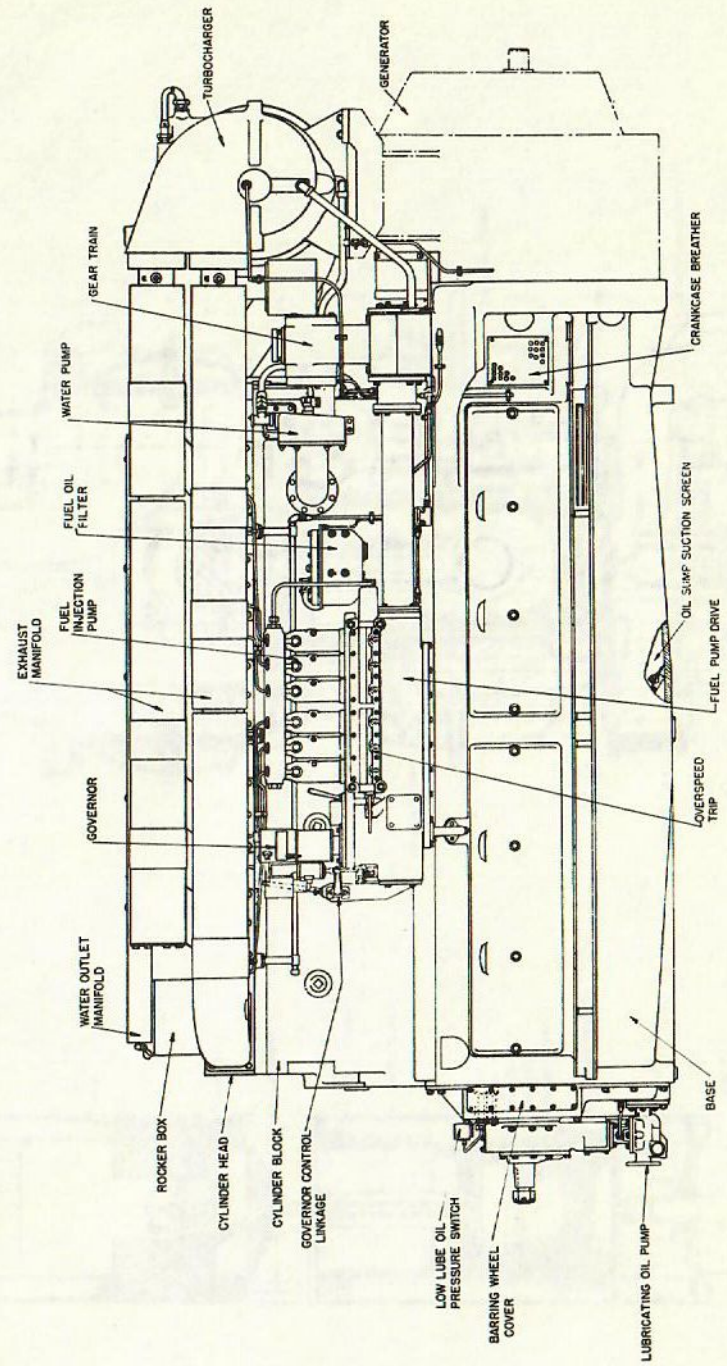

FIG. 11-0
ELEVATION - 1000 HP ENGINE

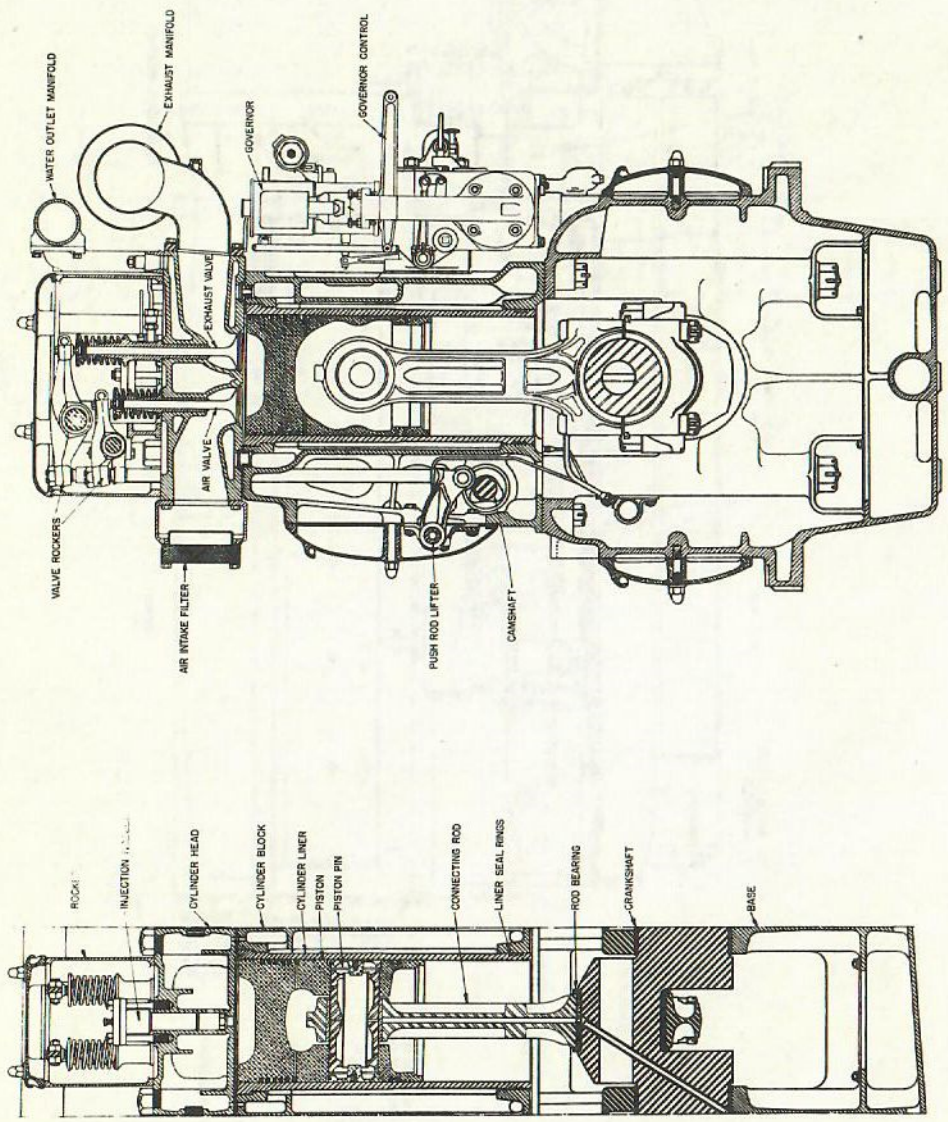

FIG. 12-0
CROSS SECTION - 660 HP ENGINE

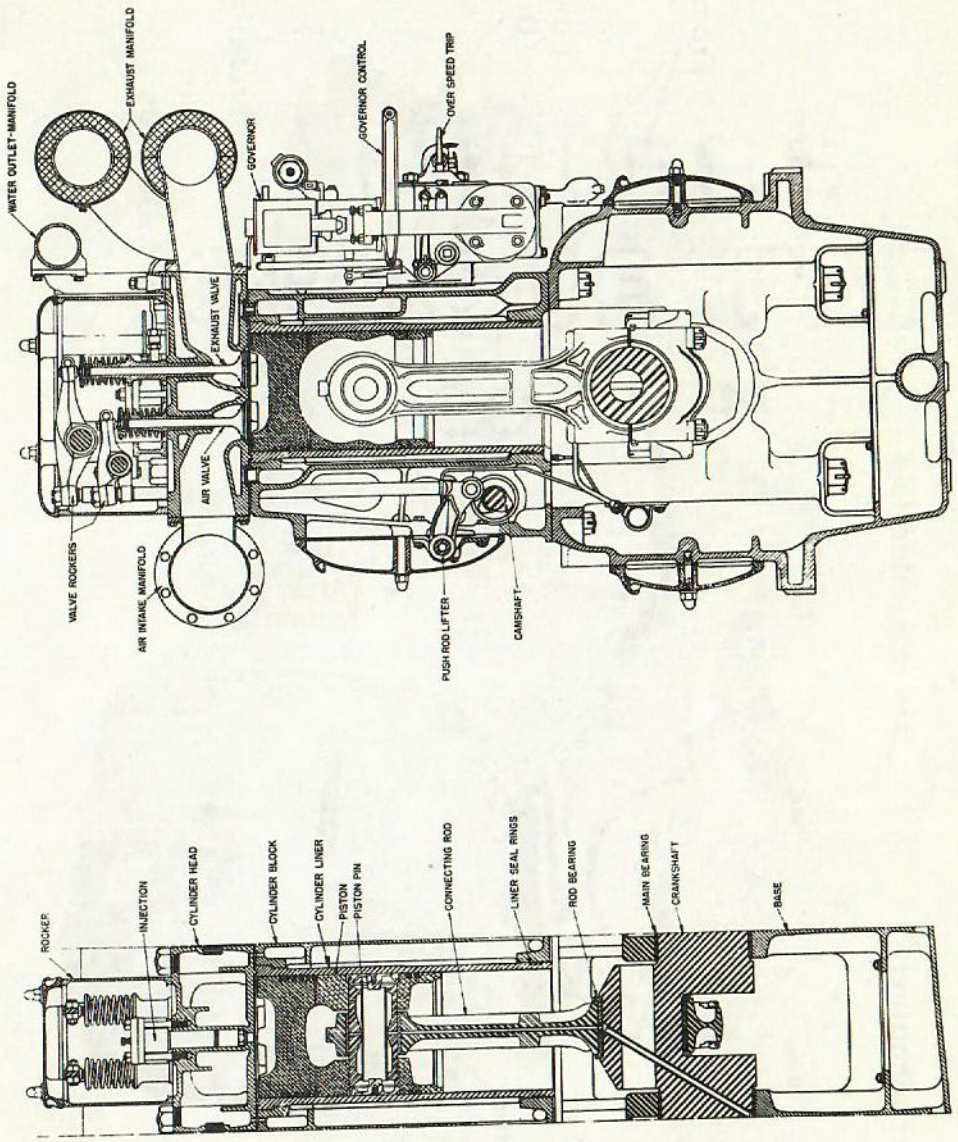

FIG. 13-0
CROSS SECTION - 1000 HP ENGINE

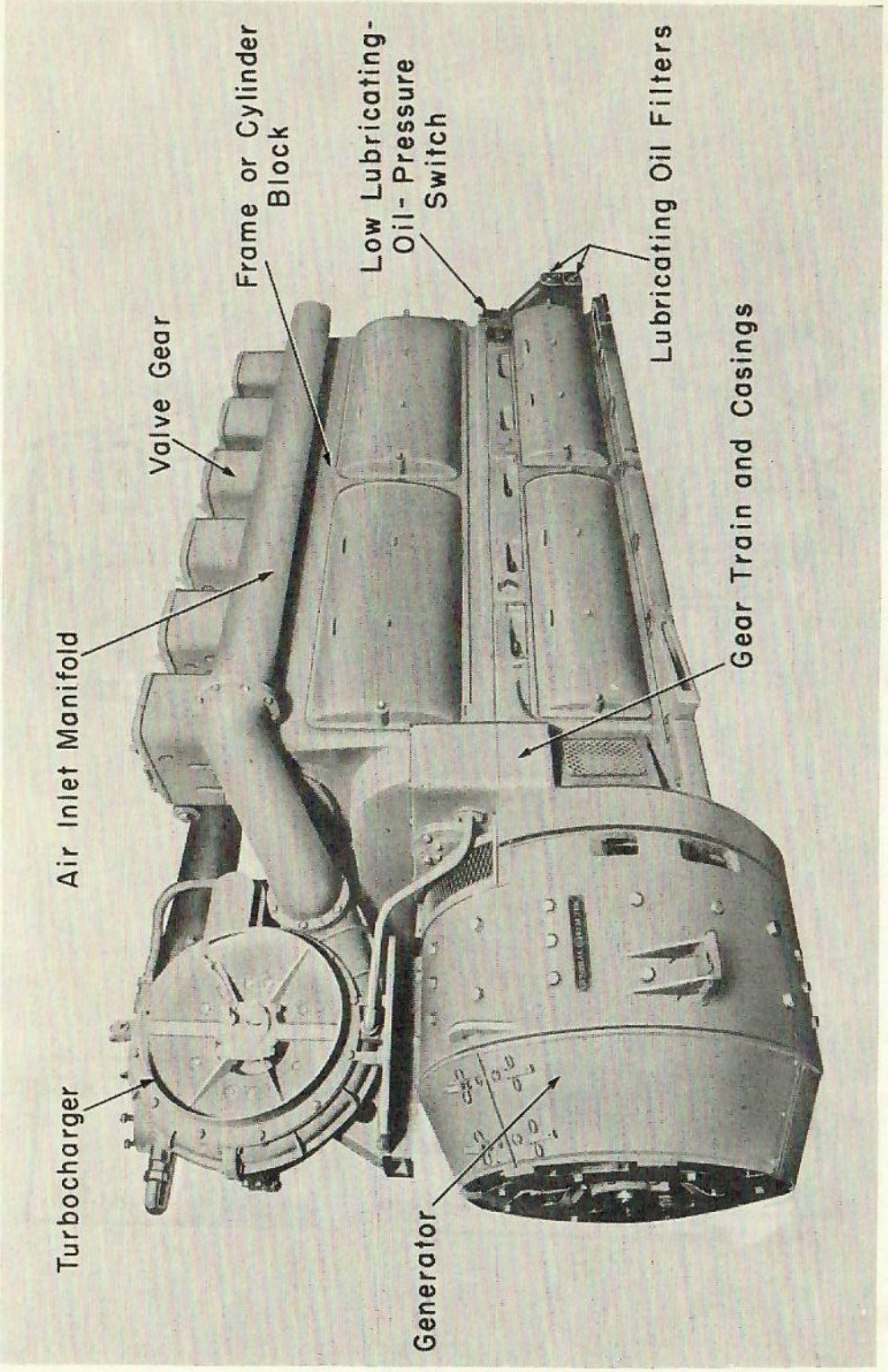

FIG. 14-0
1000 HP DIESEL ENGINE
"A" SIDE

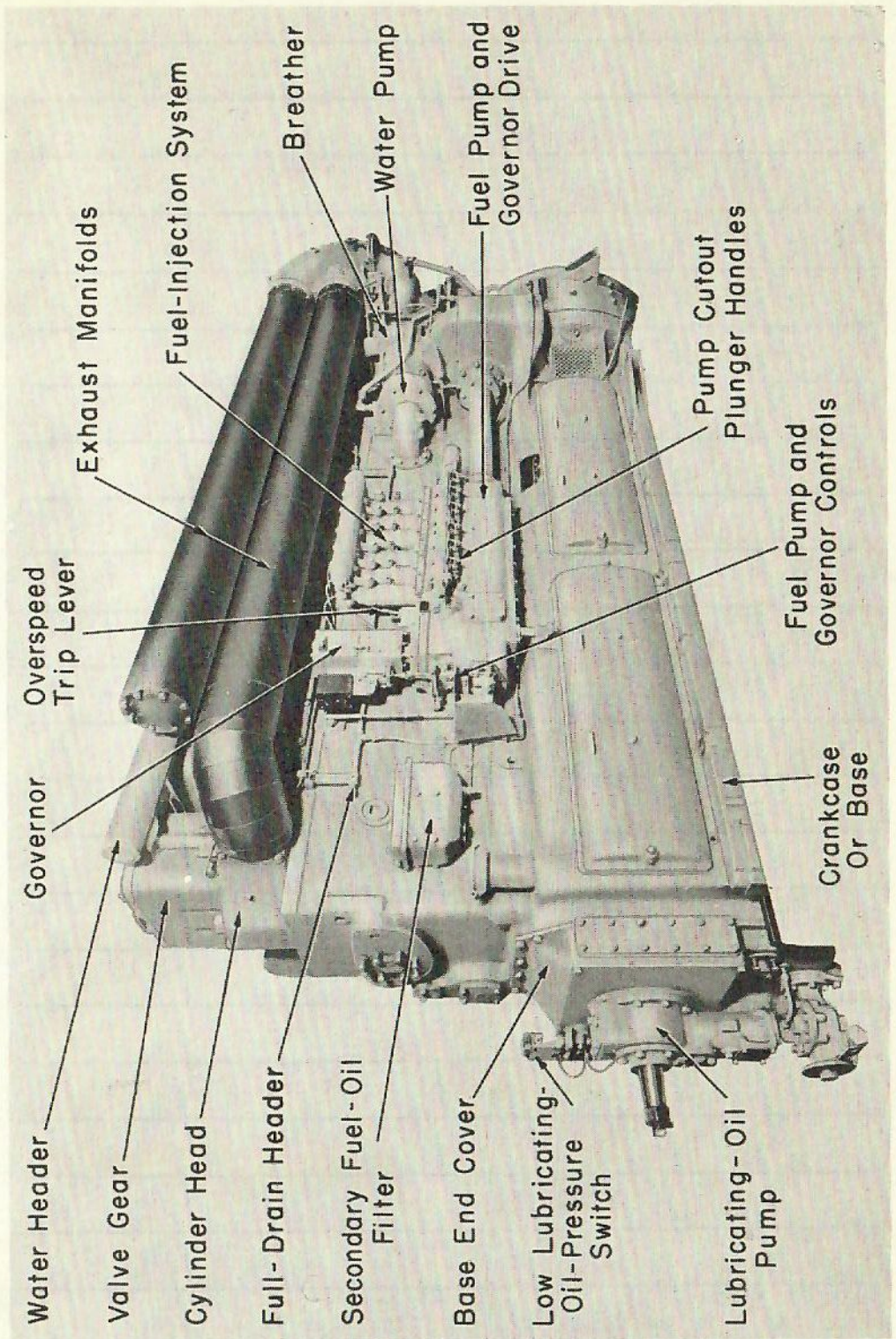

FIG. 15-0
1000 HP DIESEL ENGINE
"B" SIDE

NOTES

DIESEL ENGINE

WOODWARD GOVERNOR

TYPE "SI"

DESCRIPTION

This is a type "SI" governor equipped with special speed adjusting mechanism and special power cylinder.

The function of these special parts is: (1) to permit adjustment of the engine speed over its full operating range from the relatively small movement of the engineer's control handle: (2) to provide (A) means of quickly shutting the engine down from the engineer's cab and (B) automatic means of shutting the engine down in the event of low lubricating oil pressure.

To change the operating speed of the engine it is necessary only to change the amount of compression of the speeder spring or speed adjusting spring. The speed adjusting shaft supports and is integral with the speed adjusting lever. The teeth in the segment of the speed lever mesh with corresponding rack teeth in the speeder spring plug. The speeder spring plug bears on the top of the speeder spring. Therefore, a movement of shaft results in a change in the amount of compression of the speeder spring and a corresponding change in engine speed.

The solenoid valve attached to the governor power piston head is used to shut down the Diesel engine. If the engine lubricating oil pressure should fall below 23 pounds or if the fuel pump button in the cab is pulled, the solenoid will be de-energized. This opens the solenoid valve and relieves the oil pressure under the power pis-

tons. Then the power spring will force the piston down and the fuel racks will move to shut down the position.

The Woodward Governor consists essentially of three elements:

1. The speed measuring device or governor head.

2. The power element which on indication from the governor head, performs the work of changing the amount of fuel injected into the engine cylinder.

3. The stability or compensating element which prevents racing or hunting of the prime mover by stopping the governor movement when this movement is sufficient to bring the speed back to normal.

GOVERNOR REMOVAL

1. Disconnect wires at governor solenoid.

2. Disconnect the ball stud link from the control lever at the governor.

3. Remove cotter pin, washer and pin from the fuel pump governor control lever.

4. Remove nuts holding the governor to the fuel pump casing. Lift off the governor.

GOVERNOR MAINTENANCE

OIL CHANGES

The governor oil should be clean and free of foreign particles. Under favorable conditions, the oil may be used for approximately six months without changing. If adjustment of the Compensating

Needle Valve does not result in proper operation, dirty oil may be the cause of the trouble.

To change the oil, remove the governor from the engine, take off the cover, drain by turning upside down and flush thoroughly with clean fuel oil to remove any foreign matter. Drain thoroughly, flush, and refill with clean governor oil. Follow the above procedure whenever the governor is removed from the engine.

If it is not possible to shut down long enough to remove the governor from the engine, remove oil drain plug, drain the oil from the governor, fill with fuel oil, run for approximately thirty seconds with the needle valve open, drain and refill with clean governor oil.

If the governor is stored it should be filled with oil. The oil level in the sight glass should be maintained as closely as possible at the middle point. Oil should be added whenever the oil drops below the bottom of the sight glass.

WORK REQUIREMENTS

It is suggested that the best mechanic available (preferably one experienced with small parts assembly) be permanently assigned to all governor repair work. Cleanliness of tools and work space is essential. A work bench, vise, arbor press, speed lathe, air line, and containers for cleaning solvents should be provided if possible.

The usual small hand tools are required and a few special Woodward Governor tools are desirable if subassemblies are to be disassembled.

DISASSEMBLY OF GOVERNOR INTO SUBASSEMBLIES

A. Cover

1. Remove four screws and lift off.

B. Column

1. Unscrew four column retaining screws in inside corners of column and lift off column. Screws may be left in place.

C. Rotating Sleeve

1. Unscrew two flathead screws in retainer plate and remove screws, Fig. 1-1.

2. Raise ballhead carefully and remove two laminated washers under retainer plate to avoid dropping them into the governor sump, Fig. 2-1.

3. Remove rotating sleeve assembly from governor.

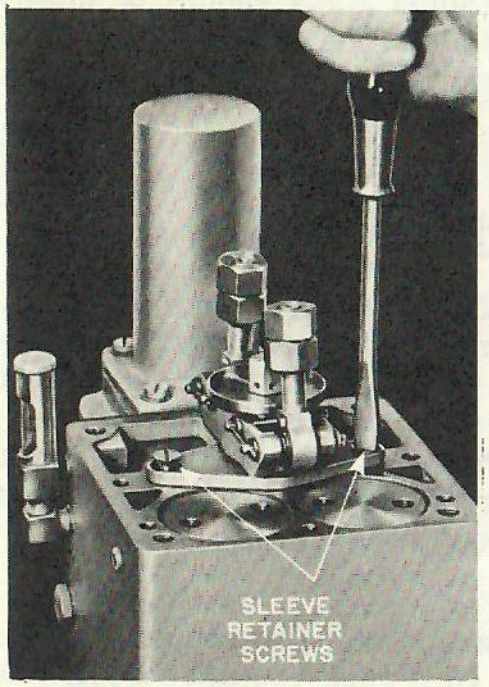

FIG. 1-1

FIG. 2-1

D. Servomotor

1. Remove four stud nuts.

2. Remove servomotor. It may be necessary to tap with a plastic hammer to break loose from gasket.

NOTE: If the governor has an adapter pad between the servomotor and power case be sure to mark it prior to removal so it will be replaced in the correct position.

E. Power Case and Base

1. Remove eight locknuts and eight stud nuts. Pull off base, Fig. 3-1. Drive against edge of base with plastic hammer as shown to break loose gasket. Pull evenly to clear dowel pins.

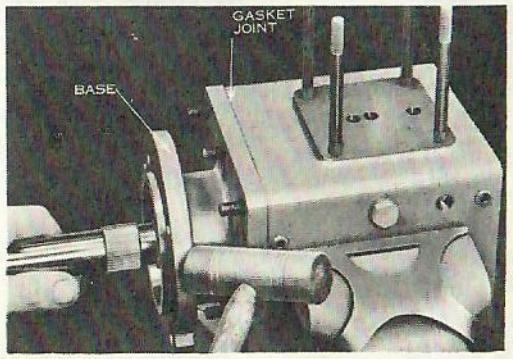

FIG. 3-1

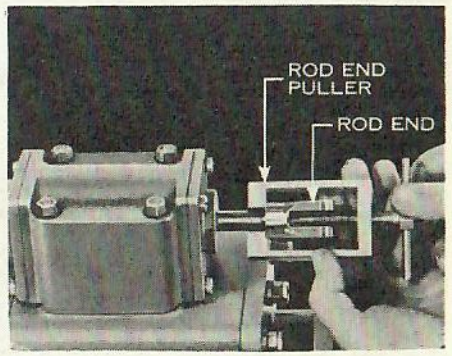

FIG. 4-1

OIL SEALS

When it becomes necessary to add oil to the governor too frequently, the oil seals should be replaced.

DRIVE SHAFT OIL SEAL

1. See instructions on Drive Shaft Repair, Page No. 116.

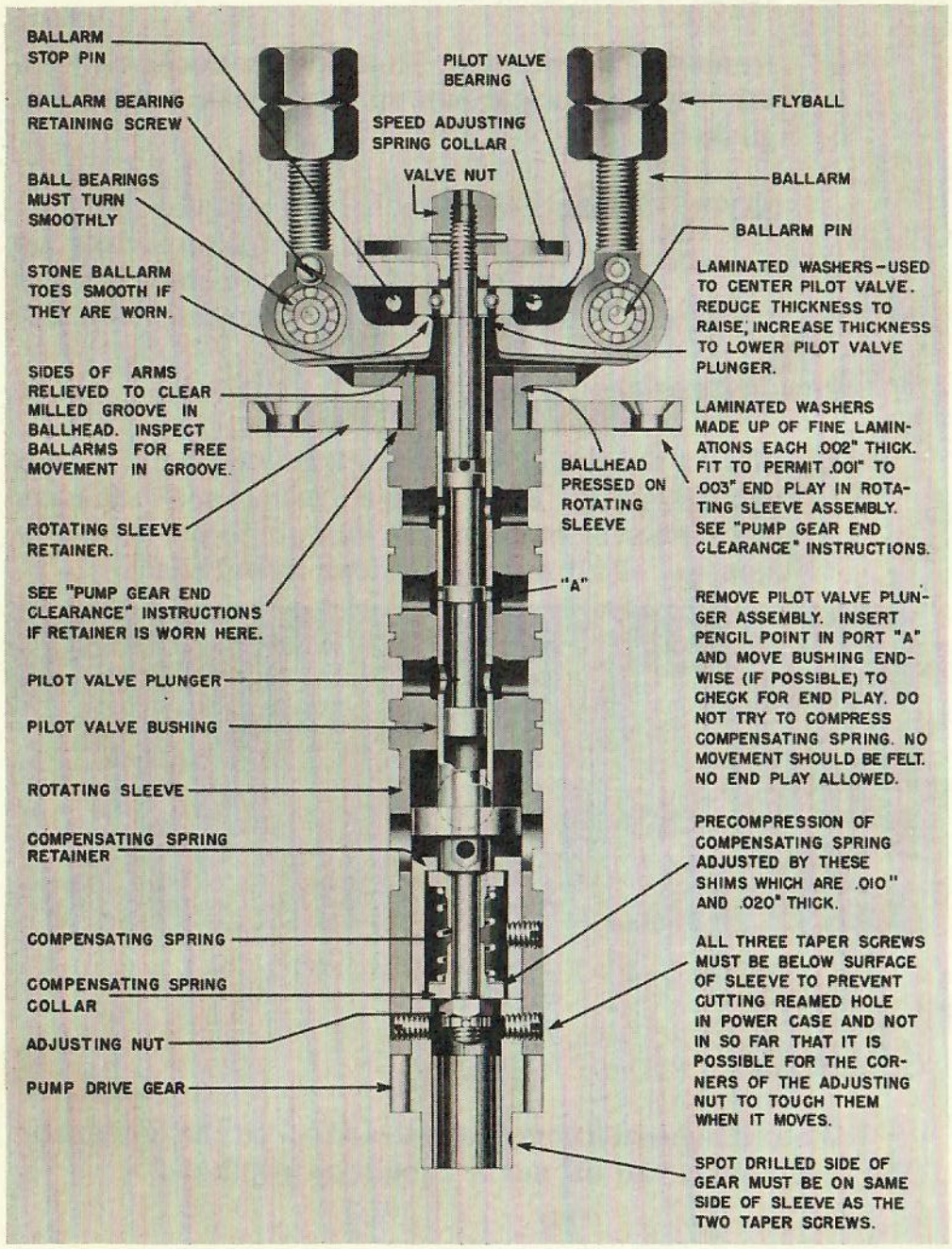

FIG. 5-1

PISTON ROD OIL SEAL

1. Remove taper pin in rod end. Use care not to bend piston rod.
2. Use rod end puller to remove rod end, Fig. 4-1. If rod end puller is not available, disassemble servomotor. See instruction, page No. 114.

   CAUTION: The Rod End is screwed onto the Piston Rod in some governors. This construction may be recognized by the flats milled on the piston rod. Use two wrenches and unscrew rod end.

3. Remove cylinder head and replace oil seal. See instructions, Page No. 115.

ROTATING SLEEVE ADJUSTMENT AND REPAIR

Make disassembly A, B, and C removing rotating sleeve from governor to perform any of the following work. Always check pilot valve adjustment before reinstalling sleeve in governor.

BALLARM BEARINGS

Action of the ballarm bearing may be quickly checked by removing the pilot valve and inverting the whole rotating sleeve. Hold the sleeve inclined approximately 5 degrees from vertical and push the flyball outward as shown in Fig. 6-1. It should move outward freely and drop back freely when released.

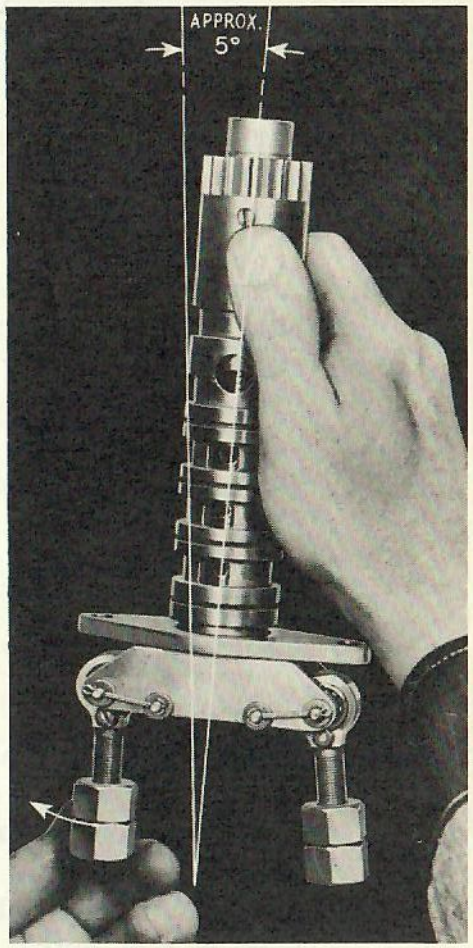

FIG. 6-1

Wear of the bearings may be checked by moving the ballarms sidewise as shown in Fig. 7-1. Movement of 1/64 of an inch may be expected from new bearings. Bearings may be used until the movement reaches 1/16 inch.

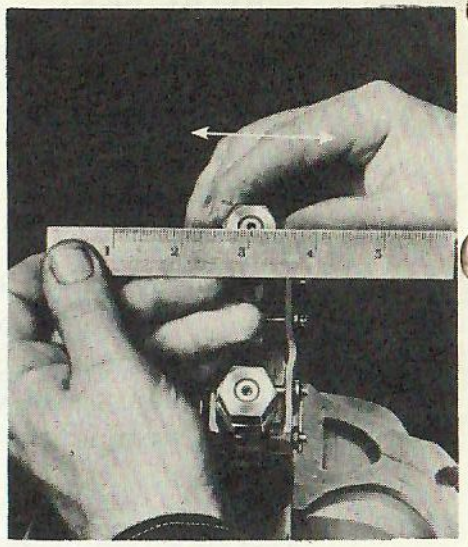

FIG. 7-1

If necessary to correct roughness or replace bearings continue with the following instructions:

1. Remove cotters and ballarm pins, using care not to bend pins.

2. Remove ballarm bearing screw and nut. The nut is prick punched to prevent loosening but can be removed by using force. Push out bearings.

3. Turn bearings between fingers testing for roughness.

4. If slightly rough or worn excessively, replace with new bearings.

5. If bearings do not go into ballarm with finger push, it indicates that the ballarm bearing bore has distorted to an oval shape. Ream out tight sides of the hole carefully with three cornered scraper until the bearing pushes in without distorting the outer race of the bearing. Replace retainer screws.

BALLARM TOES

The ballarm toes must be smoothly finished to allow them to slide on the face of the pilot valve plunger bearing. If there is any indication of wear or grooving, refinish them by hand with fine emery cloth as shown in Fig. 8-1.

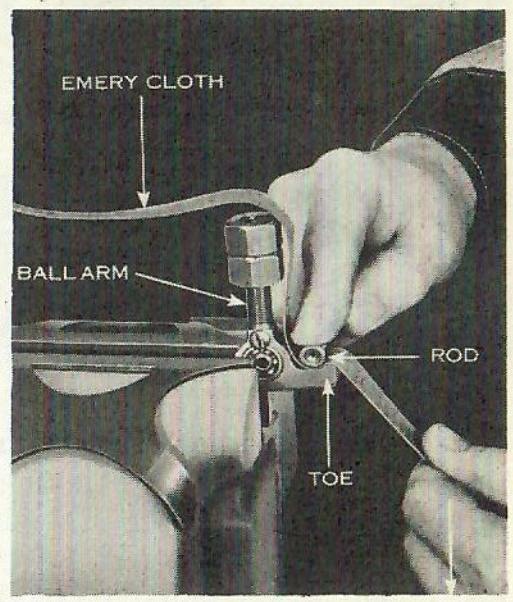

FIG. 8-1

Install new ballarms if worn excessively. The flyballs should be set in same position as they were on the old ballarms. If in doubt set the top nut flush with the end of the ballarm.

BALLARM PINS

The ballarm pins should fit the bearing hole snugly but a slip fit is satisfactory. If the pins are worn they may be interchanged with the ballarm stop pins.

PILOT VALVE PLUNGER BEARING

The face of the outer race of the pilot valve bearing where it contacts the ballarm toes must be perfectly flat. If grooved it may be turned to use the opposite face or it may be replaced with a new bearing. If worn internally, the bearing should be replaced.

PILOT VALVE BUSHING

1. Remove three taper screws and pull out pump drive gear, Fig. 5-1.

2. Push out the pilot valve bushing assembly.

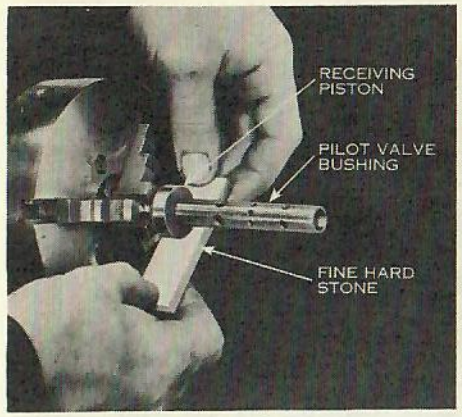

FIG. 9-1

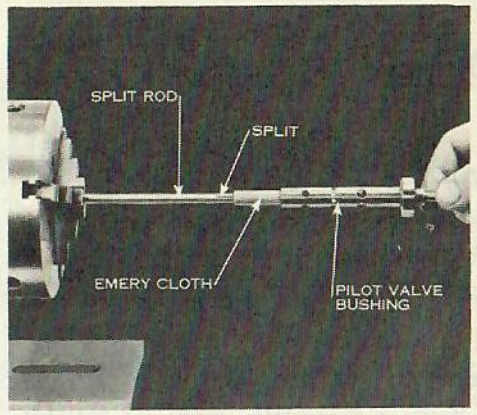

FIG. 10-1

The pilot valve bushing must move freely in the rotating sleeve without sticking or catching. The outside of the bushing may be polished in a speed lathe if necessary as shown in Fig. 9-1. Use a fine, hard stone. Do not break sharp corners of the large diameter. Polish the threaded end lengthwise to remove sharp corners on thread and polish stem.

The pilot valve plunger must move freely in the pilot valve bushing. To polish the inside of the bushing, use a 1/4" diameter split rod wound with fine emery cloth and use in a speed lathe as shown in Fig. 10-1. Do not break the inside edge of the holes through the bushing.

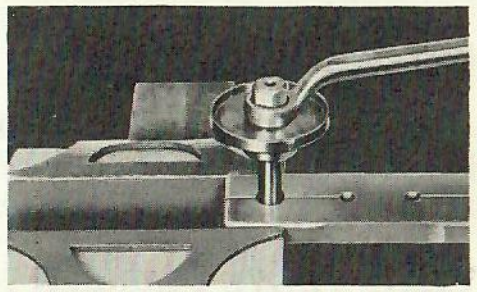

FIG. 11-1

PILOT VALVE PLUNGER

The pilot valve plunger must be handled carefully to avoid nicking the sharp edges of the lands. It must move freely in the pilot valve bushing without sticking or catching. Clamp the plunger in a split strap as shown in Fig. 11-1 or in a vise as shown in Fig. 12-1 to remove the pilot valve nut.

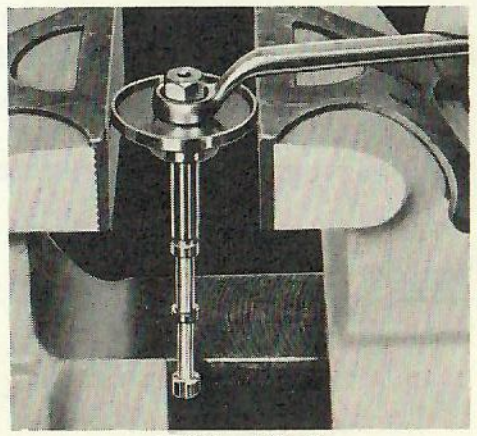

FIG. 12-1

Polish the plunger with a fine hard stone if necessary as shown in Fig. 13-1. Do not break the sharp corners of the control land.

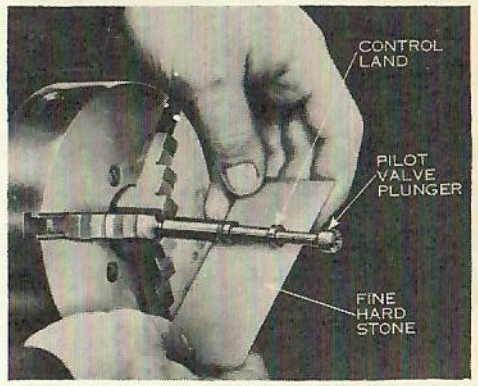

FIG. 13-1

PILOT VALVE ADJUSTMENT

The pilot valve adjustment should be checked after doing any work on ballarms, pilot valve plunger, or pilot valve bushing, and whenever the rotating sleeve is removed from the governor for other reasons.

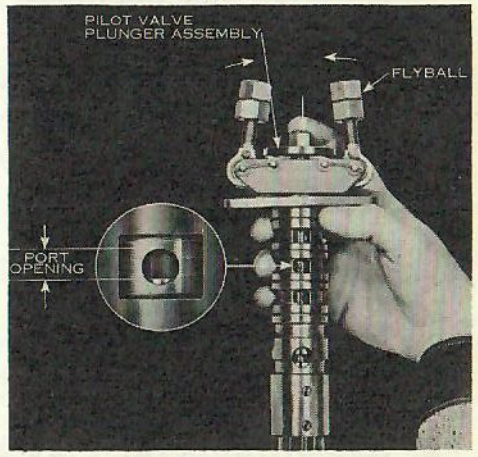

FIG. 14-1

1. Hold the rotating sleeve upright with the pilot valve plunger assembly in place.

2. Push down on the pilot valve plunger as shown in Fig. 14-1. This will move the flyballs to inner position. Note amount of port opening.

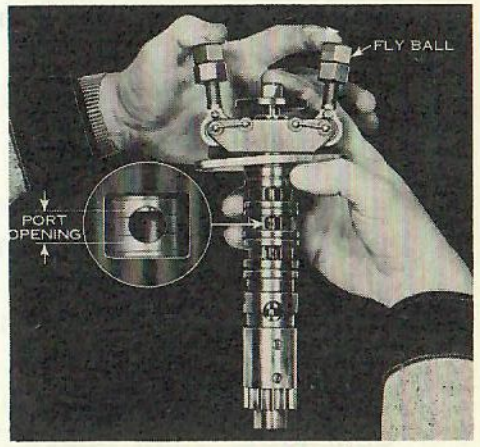

FIG. 15-1

3. Continue holding down on pilot valve plunger and move flyballs to outer position raising the pilot valve land, Fig. 15-1. Note amount of port opening.

4. The amount of port opening for inner and outer positions of the flyballs should be the same and should be correct to within .005".

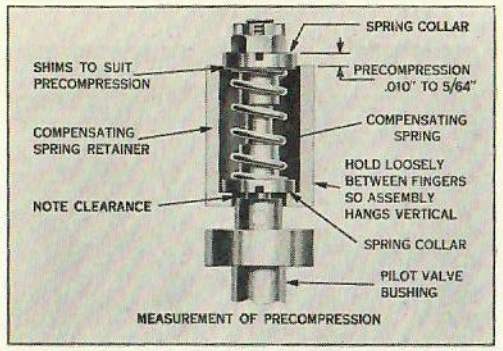

FIG. 16-1

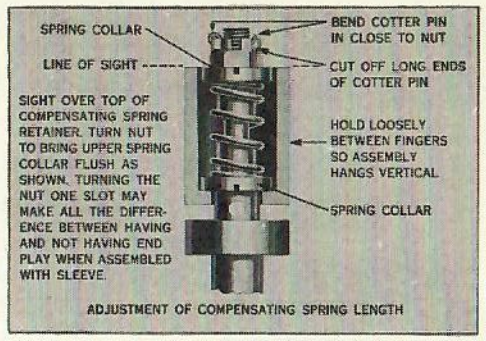

FIG. 17-1

5. If the pilot valve plunger needs to be raised to equalize the openings, reduce the thickness of the laminated washers between the pilot valve bearing and the shoulder of the pilot valve plunger. If the plunger needs to be lowered, add the necessary laminations to the washer to increase its thickness. Fig. 5-1.

COMPENSATING SPRING ADJUSTMENT

1. Make disassembly A, B, and C, removing rotating sleeve from governor.

2. Remove pilot valve plunger assembly. See Fig. 5-1.

3. Remove three taper screws.

4. Pull out pump drive gear and pilot valve bushing assemblies.

5. Remove cotter and back off adjusting castle nut to release spring load, Fig. 16-1.

6. Change precompression, if necessary.

   This precompression may vary from .010" to 5/64" depending upon characteristics of engine and load. To eliminate a hunt, remove shims to reduce precompression. To eliminate a surge, add shims to increase precompression. It is essential to make the following adjustment regardless of the amount of precompression obtained in instruction No. 6, above.

   Adjust compensating spring length as shown in Fig. 17-1. The collar must be exactly flush with the top of the spring retainer.

7. Insert 1/16" cotter pin through castle nut and secure. Cut off ends as shown in Fig. 17-1.

8. Reassemble with sleeve and pump drive gear. Tighten taper screws. Inspect ends of screws to be certain they do not project outside of sleeve. File off burrs at slots if necessary.

9. Remove pilot valve if in bushing and check for end play or lost motion of bushing by inserting pencil point in port "A", Fig. 5-1, and attempt to move it endwise with light force in both directions Fig. 18-1. No end play or lost motion allowed.

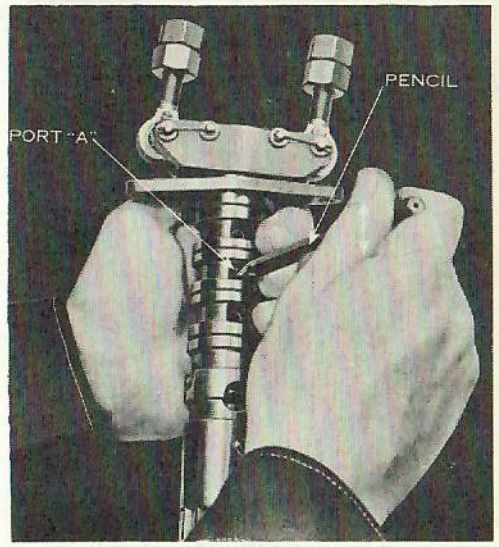

FIG. 18-1

10. If lost motion or end play is detected, it indicates the nut is incorrectly adjusted and should be readjusted as shown in Fig. 17-1. The upper spring collar must be exactly flush with the end of the spring retainer.

CHECK VALVES

Low oil pressure may indicate pressure leakage at the check valves. The valves should be reseated each time the governor is overhauled and when oil pressure is low. See pump gear end clearance instructions, Page 119.

1. Make disassemblies A, B, C, and D.

2. Remove the ball check plugs. See top view of power case, Fig. 2-1.

3. Invert governor removing the four steel balls.

4. Flush power case with light fuel oil and blot out with clean air hose.

5. Set governor upright and drop one of the 1/4" balls into each hole.

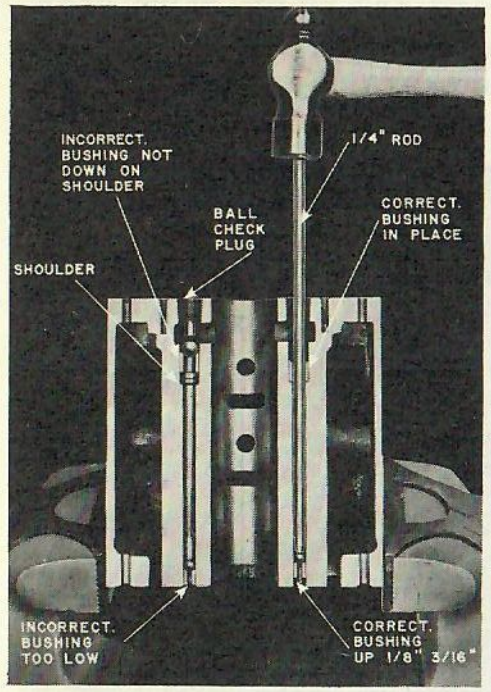

FIG. 19-1

6. Place 1/4" rod on top of each ball and tap ball into the soft metal seat. Fig. 19-1.

7. Drop 3/8" balls into each hole.

8. Tap into seat with rod.

9. Invert governor removing the balls.

10. Inspect check valve bushings at pump bore to be certain bushings are not restricting oil flow. See Fig. 19-1. If bushing is too low drive it back up.

11. Inspect balls for flat spots and cracks. Replace in holes.

12. Replace ball check plugs.

SERVOMOTOR

Disassembly of the servomotor will mainly be required.

a. To permit cleaning and polishing of parts.

b. Replacing a bent piston rod: or

c. To replace oil seal. See Page No. 107 for possible short cut to oil seal replacement without full disassembly.

1. Make disassembly D, Page 105.

2. Remove spring guard. Place servomotor in arbor press. Hold guard in place with press while removing four screws. Steady spring guard with one hand while gradually releasing press. See Fig. 20-1. The guard compresses a powerful spring. Care must be used in its removal.

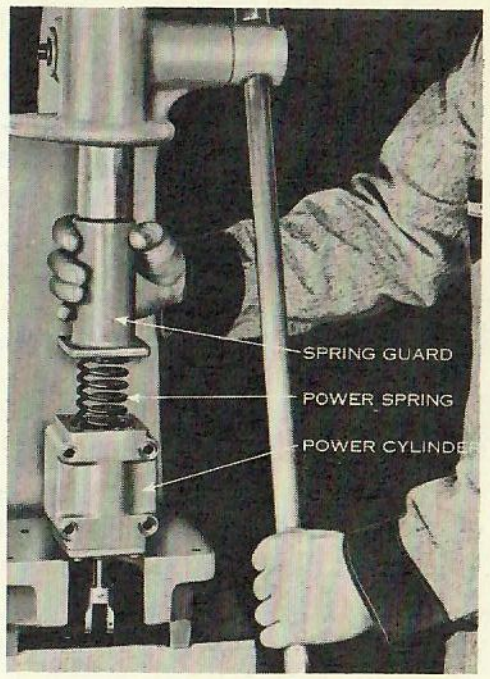

FIG. 20-1

3. Remove four screws holding cylinder head.

4. Place power cylinder in vise, remove cotter and nut holding piston rod, Fig. 21-1.

5. Remove piston rod, Fig. 22-1.

6. Press piston rod out of compensating piston, Fig. 23-1.

7. To replace oil seal pry out old seal from cylinder head and press in new seal, Fig. 24-1.

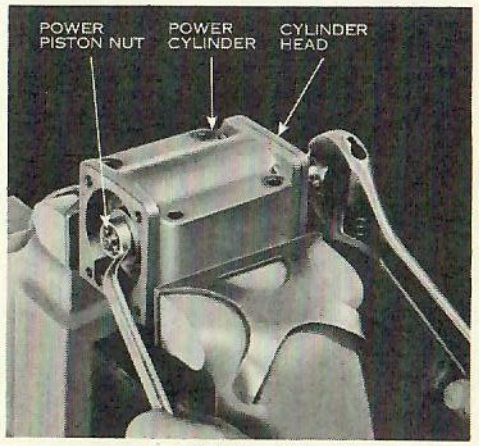

FIG. 21-1

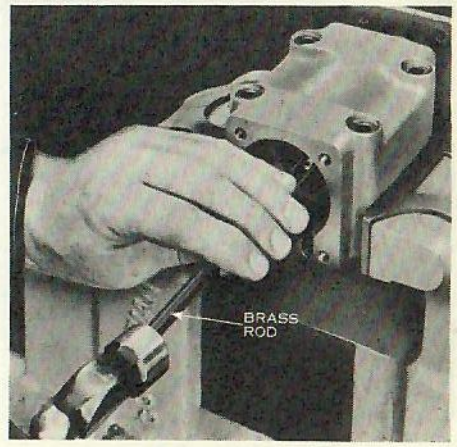

FIG. 22-1

8. Reassembly. Reverse the preceding steps.

   a. Use care in inserting piston rod in cylinder head to prevent damage to oil seal lip. If oil seal inserter is not available, use thin shim stock to protect seal.

   b. In pressing compensating piston on piston rod see that piston fits tight to shoulder on rod. Use care not to bend rod.

   c. After replacing power piston and nut, pistons must work freely when power cylinder is bolted to power case. Make this test without spring and guard. If rotating sleeve is in power case remove the pilot valve plunger assembly. Remove power cylinder from power case and complete servomotor assembly.

DRIVE SHAFT DISASSEMBLY AND REPAIR

1. Remove lockwire.

2. Remove four capscrews

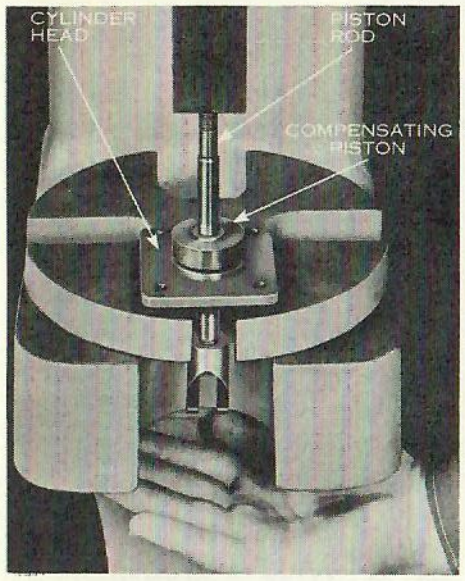

FIG. 23-1

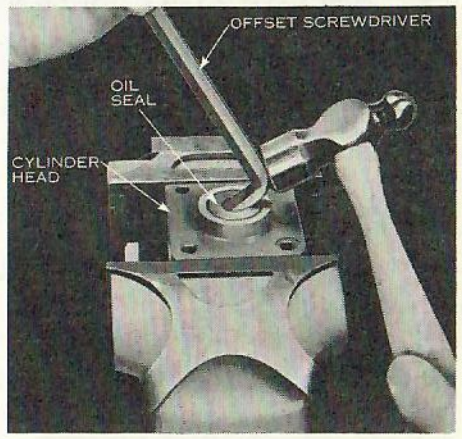

FIG. 24-1

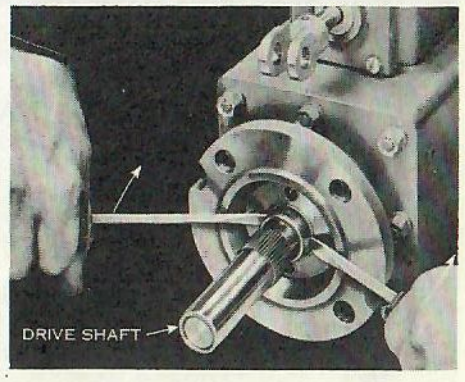

FIG. 25-1

3. Remove drive shaft assembly from bore in base. See Fig. 25-1.

4. Remove snap ring, Fig. 26-1.

5. Press drive shaft out of bearing. See Fig. 27-1.

6. Remove bearing retainer.

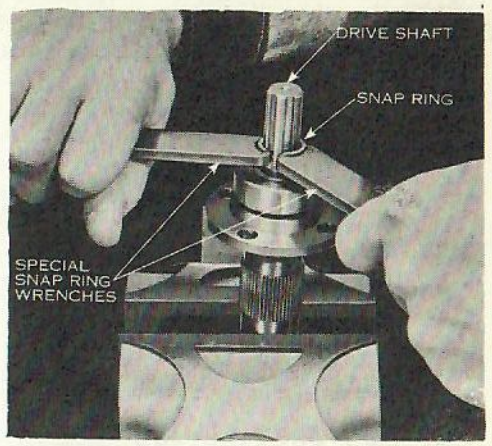

FIG. 26-1

7. Replace oil seal in bearing retainer if worn. Use care not to damage lip of seal when inserting shaft, (use inserter).

8. Inspect drive bearing for wear and free rotation. Replace if it shows any sign of wear.

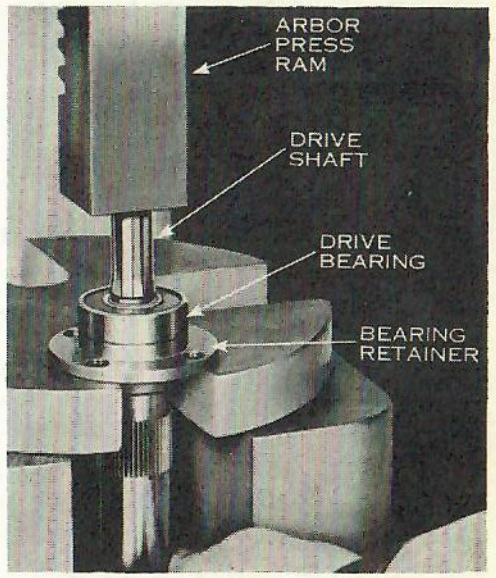

FIG. 27-1

9. It will not be necessary to disassemble the spring drive unless governor has had several years operation and is being completely overhauled. In this case spring drive laminations should be inspected for wear or possible breakage.

   To disassemble drive out taper pin and pull off drive sleeve. Polish out any grooves in alignment pin and sleeve bore in which laminations might catch. Remove all burrs and sharp corners from new laminations.

10. Reassemble.

ASSEMBLY INSTRUCTIONS

Caution: Do not drop or rest governor on its drive shaft.

A. Assembly of Power Case to Base

1. Clean off machined surfaces of base and power case.

2. Lay special .005" thick vellumoid gasket on flat surface and paint with thinned shellac on power case side.

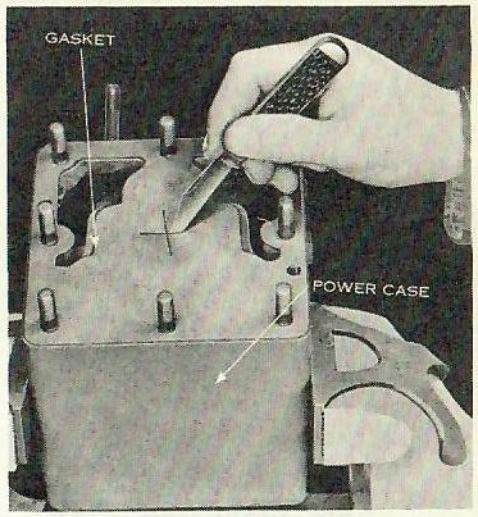

FIG. 28-1

3. Place on power case.

4. Slit gasket with knife as shown in Fig. 28-1.

5. Set base on power case to press gasket flat and allow shellac to dry. Use four nuts.

6. Remove base and cut out gasket at gear pockets with sharp knife. Use sliding downward cut as shown in Fig. 29-1. Do not tap out gasket with hammer.

7. Cut strip out of gasket at oil groove. See Fig. 29-1.

8. Cut openings at check valve bushings as shown in Fig. 29-1.

9. Place idler pump gear in gear pocket of power case.

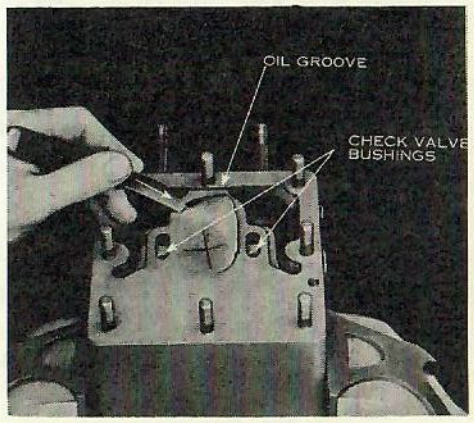

FIG. 29-1

10. Place base on case. Place thick washers and nuts on studs and finger tighten.

11. Put rotating sleeve in power case and check alignment or use special aligning tool.

12. Strike various corners of base with babbitt hammer as shown in Fig. 30-1 until the rotating sleeve turns freely.

13. Secure nuts and lock with special lock nuts.

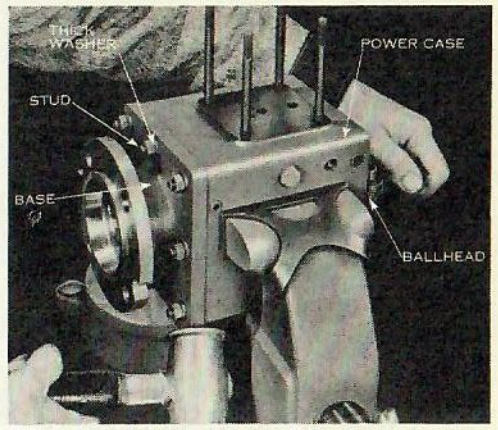

FIG. 30-1

B. Pump Gear End Clearance and Installation of Rotating Sleeve

Low oil pressure may indicate pressure leakage at the lower end of the rotating sleeve at the pump gear face. Excessive end clearance will reduce pump capacity. If there is not sufficient end clearance, excessive wear and possibly seizure will result. Pump gear end clearance is determined by the thickness of laminated washers under rotating sleeve retainer. Clearance should be from .001" to .003". See Fig. 2-1 and 5-1.

1. Remove one lamination (.002") from washer under each end of retainer.

2. Replace retainer and screws. Tighten screws and turn sleeve. If it turns freely, repeat No. 1 continuing until the sleeve turns hard.

3. Put back one lamination (.002") under each end to get minimum clearance at the pump gear face.

4. Secure retainer with screws, Fig. 1-1.

If the laminated washers have been completely removed and the sleeve will still turn freely the retainer must be replaced.

1. Remove sleeve from power case.

2. Press rotating sleeve out of ballhead as shown in Fig. 31-1.

3. Reassemble using new retainer and new laminated washers. The old retainer (which is surface hardened) may be reused temporarily if the work side is surface ground to remove the wear groove.

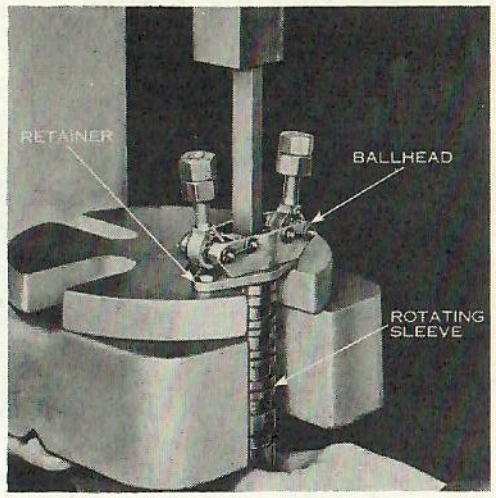

FIG. 31-1

4. Adjust for correct pump gear end clearance.

C. Assemble servomotor to power case. Too much force in tightening nuts will distort power cylinder and bind pistons. If torque wrench is available set nut to 200 pounds.

D. Insert pilot valve plunger assembly. Replace speed spring. Assemble column to power case.

Check to see that speeder spring is properly seated.

E. Flush out governor with fuel oil. Fill to the correct level with governor oil.

Replace cover.

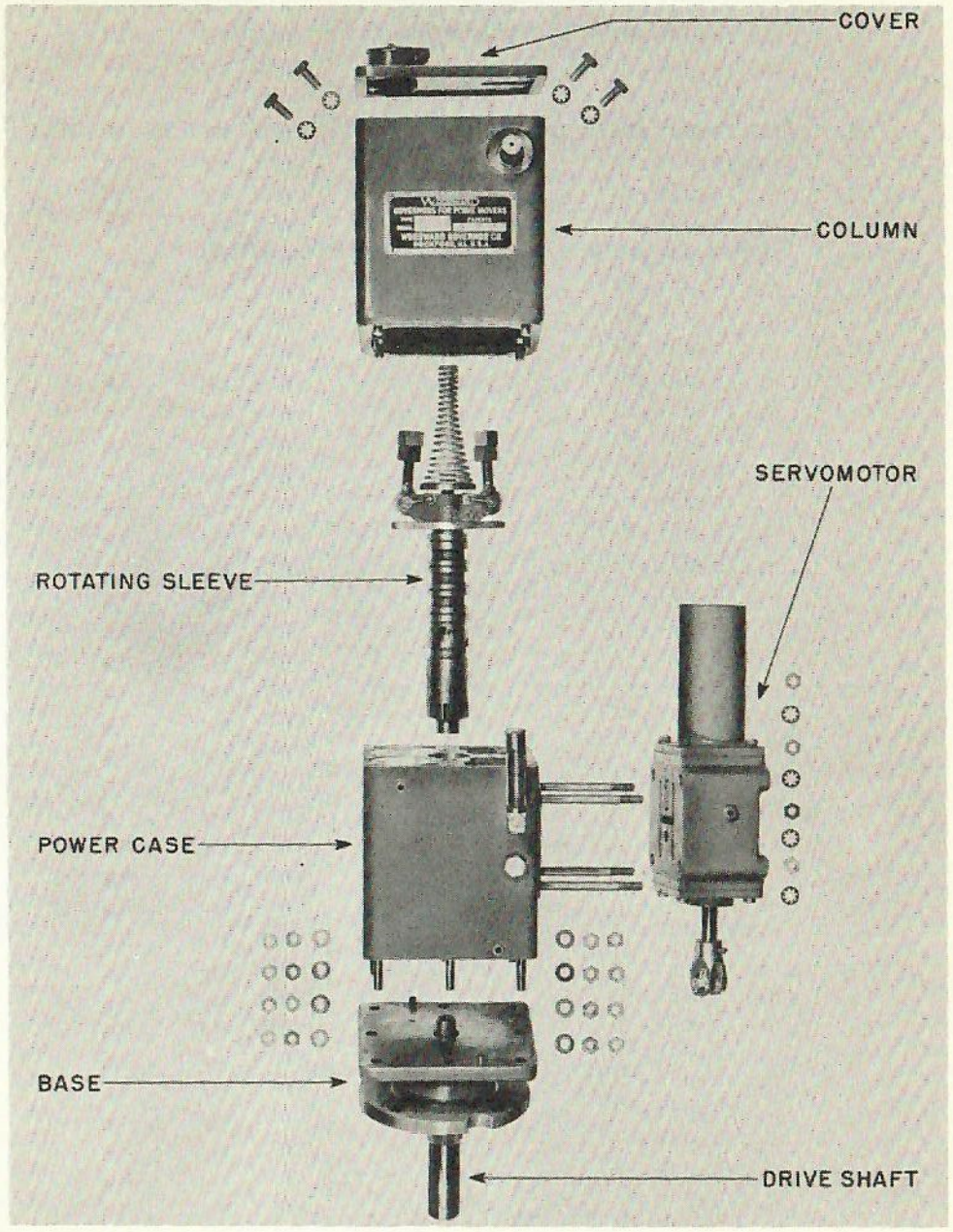

FIG. 32-1

GOVERNOR INSTALLATION

1. Set governor on fuel pump casing and bolt down. Check bevel drive gear clearance and shim under the governor if necessary.

2. Connect ball stud link to the governor control lever.

3. Connect wires to governor solenoid.

WOODWARD GOVERNOR

TYPE "PG"

GENERAL

The basic type PG governor, Fig. 33-1, is a hydraulic speed governor with buffer type compensation and simplified construction. It is normally isochronous (that is, if the engine is not overloaded it maintains the same speed regardless of load, except momentarily at the time a load change occurs). When required, a solenoid is added to this basic governor for purposes of remote control of shutdown action. When de-energized the solenoid dumps oil pressure being supplied by the pump and accumulators to the pilot valve and servo, thus allowing the servo spring to move the servo and fuel linkage to the no fuel position.

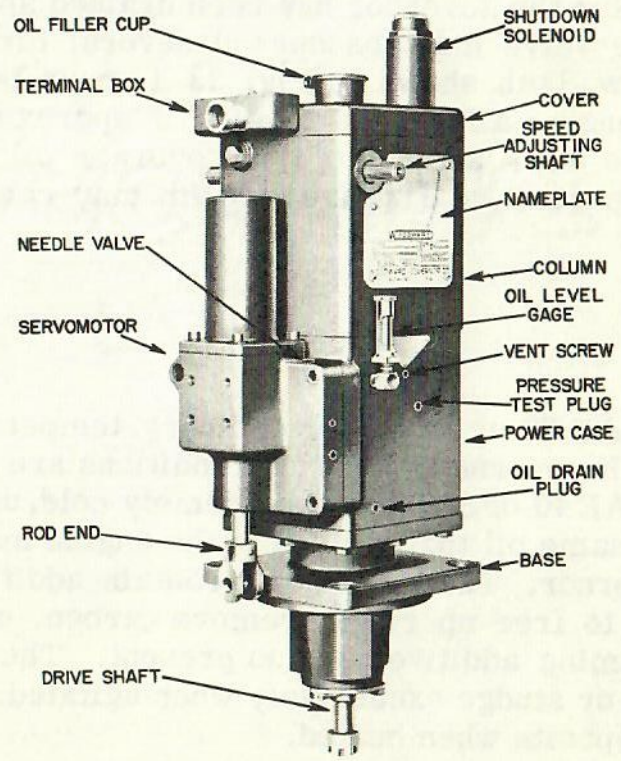

FIG. 33-1
PG GOVERNOR

As is the case with any governor of any type, it is desirable that the engine be equipped with a separate over-speed device to prevent r way in the event of any failure which may render the governor inoperative.

INSTALLATION

When the governor is installed on the engine, particular care should be exercised to see that it is mounted squarely and that the drive connection to the engine is properly aligned. The linkage from the governor to the fuel system and to the speed control station should also be properly aligned; any friction or lost motion should be eliminated.

When the engine is started for the first time, or started after the governor has been drained and cleaned, the needle valve must be opened several turns and the vent screw, both shown in Fig. 33-1, must be loosened and the engine allowed to surge for approximately 30 seconds to work air out of the governor oil passages. This is important, and failure to do this may cause erratic operation.

OIL

Use SAE 20 or 30 oil for ordinary temperature conditions. If governor operating conditions are extremely hot, use SAE 40 or SAE 50; if extremely cold, use SAE 10. Often the same oil that is used in the engine may be used in the governor. The oil must not contain additives which are used to free up rings, remove carbon, etc. unless a non-foaming additive is also present. The oil should not foam or sludge excessively when agitated, nor form gummy deposits when heated.

Dirty oil causes most governor troubles. Use clean new oil or filtered oil. All containers must be clean,

and should be rinsed with light grade fuel oil or kerosene before using.

Keep the oil level between the lines on the gage glass.

INSTALLATION ADJUSTMENTS

Speed adjustment and the needle valve adjustment are the only external adjustments to be made. Start the engine, turn the governor speed control shaft by means of the throttle control, and run the engine at idling speed.

The needle valve in the power cylinder should be opened as explained in the paragraph under installation. After the engine has surged sufficiently to remove air from the system, the needle valve should be closed gradually until surging is just eliminated. The proper setting depends upon the characteristics of the engine. Keep it as far open as possible to prevent sluggishness. After it is adjusted correctly for the engine, it should not be necessary to change it except for a large permanent temperature change affecting the viscosity of the oil. The needle valve setting will vary from 1/8 turn open to 2 turns open.

SCHEMATIC DIAGRAM

For simplicity, the schematic diagram, Fig. 33A-1, shows a PG governor without the solenoid shutdown.

The servomotor spring acts to shut off fuel to the engine. Oil pressure is used only to increase the supply of fuel.

The governor drive shaft, pump, rotating bushing and flyballs rotate together. The drive shaft speed may be either engine speed or some ratio of engine speed as determined by the drive from the engine. The drive shaft may rotate in either direction.

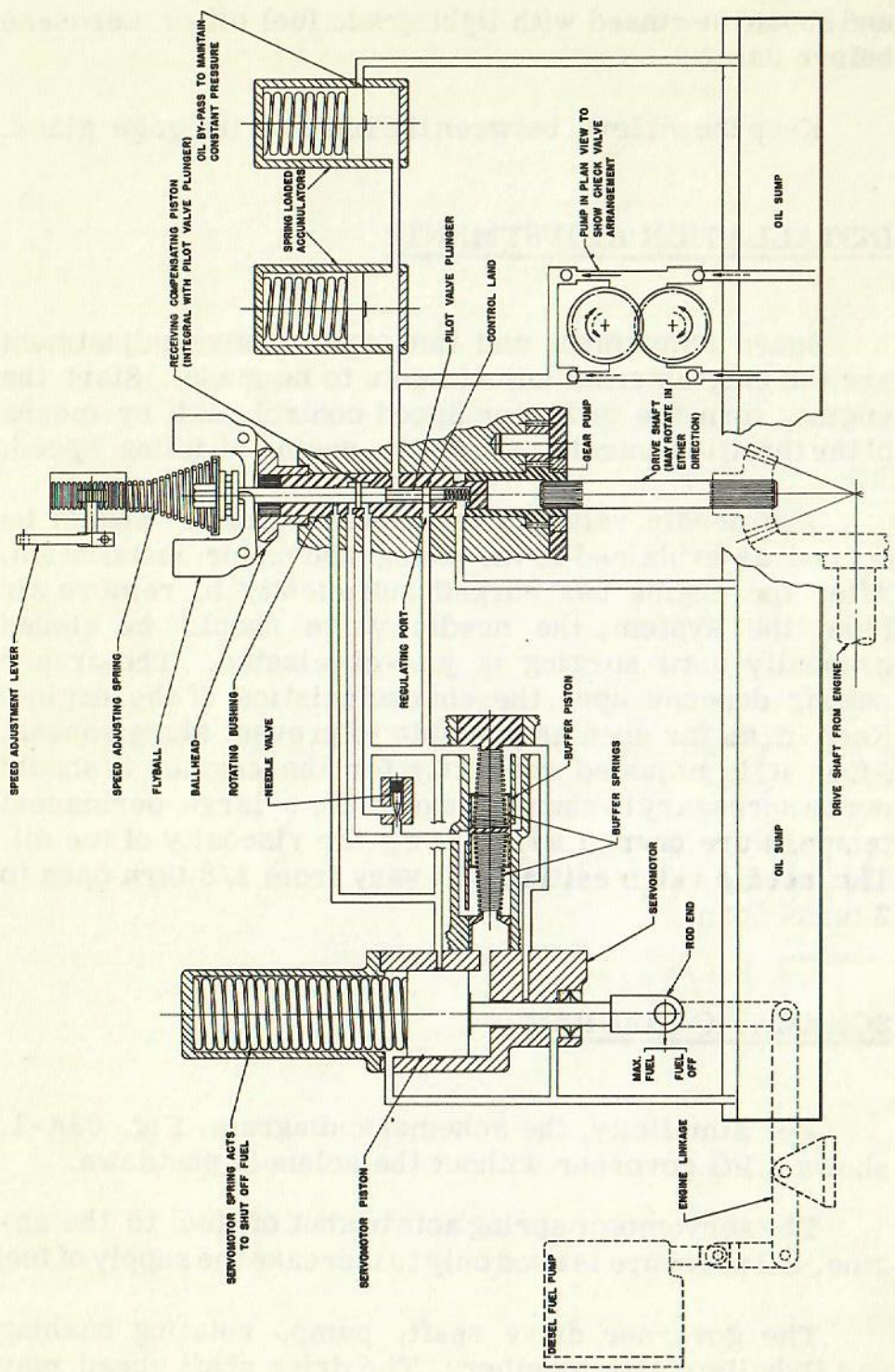

FIG. 33 A-1
SCHEMATIC DIAGRAM "PG" GOVERNOR

Two accumulators are provided for pressure oil storage capacity; the maximum pressure of governor oil is regulated by a bypass in one of them.

A buffer piston centered by springs is in the hydraulic circuit between the pilot valve plunger and the servomotor piston. It is bypassed by the needle valve, and also by passages which are uncovered when it moves more than a certain distance away from its central position. Any difference in oil pressure on the two sides of the buffer piston is transmitted to the receiving compensating piston on the pilot valve plunger.

DESCRIPTION OF OPERATION

LOAD DECREASE: As shown in the schematic diagram, the engine is running at normal speed under steady load. The flyballs, pilot valve plunger and buffer piston are in normal positions. The control land on the pilot valve plunger covers the regulating port holes in the rotating bushing. The servomotor piston is stationary.

Assume that the engine load is decreased, thus increasing the speed. As the engine speed increases, the governor flyballs move out, the pilot valve plunger is raised, and the control land uncovers the ports in the rotating bushing. Uncovering the ports in this direction allows passage of the oil from the right side of the buffer piston to the sump. The buffer piston moves to the right, and the servo spring moves the servo piston down, displacing the trapped oil to follow the buffer piston movement, and reducing fuel supply to the engine. With the right side of the buffer piston open to sump, it is apparent that the oil pressure on the left side is higher; these pressures are transmitted to the areas above and below the receiving compensating piston on the pilot valve plunger, and since the higher pressure is above this piston, it is forced downward, so that the control land of the pilot valve plunger starts to close the ports and

stop the servomotor movement. The governor is so designed that this action will stop the movement of the servomotor when it has moved far enough to readjust the fuel supply to compensate for the load change that started the action.

Oil leaking through the needle valve then allows the buffer piston springs to return the buffer piston to center, which gradually releases the force on top of the receiving compensating piston. This force is no longer needed to hold the pilot valve plunger in its central position, because during this time the engine speed has been returning to normal, and the outward force of the flyballs has been returning to normal.

It is apparent that the compensating mechanism described above produces stable operation by permitting the governor to move rapidly in response to a speed change, and then wait for the speed to return to normal.

LOAD INCREASE: As before, all parts of the governor are centered, and there is no servomotor movement.

Assume that the engine load is increased, resulting in a decrease in speed. The governor will go through a cycle of operations just the reverse of those described above, as follows: The decrease in engine speed will cause the governor flyballs to move inward, lowering the pilot valve plunger and uncovering the regulating port in the rotating bushing. In this direction, pressure oil from the accumulators passes through the pilot valve and regulating port to the right side of the buffer piston, forcing the buffer piston to the left. Increased pressure of the oil on the left side of the buffer piston (and under the servo piston) overcomes the action of the servo spring, and forces the servo piston up, thus increasing the fuel supply to the engine. The higher oil pressure on the right side of the buffer piston, transmitted to the under

side of the receiving compensating piston on the pilot valve plunger, raises the pilot valve and covers the regulating port, stopping the movement of the buffer piston and servo piston when it has moved far enough to adjust the fuel supply for the load change that started the action.

Oil leaking through the needle valve gradually releases the force under the receiving compensating piston, allowing the buffer piston to return to center. This force is no longer needed to hold the pilot valve plunger in its central position, because during this time the engine speed has been returning to normal.

In the foregoing description, speed changes as a result of load changes have been considered. Similar governor movements occur when a difference between actual governor speed and governor speed setting is produced by turning the speed control shaft. The speed of the engine is adjusted by raising or lowering a plug which changes the compression of the speeder spring (speed adjusting spring). This plug is raised or lowered by a gear segment on the speed adjusting shaft.

ENGINE SPEED ADJUSTMENT

Application of New Governor

When applying a new governor care must be taken to see that all joints are tight and that there are no oil leaks. When changing the drive gear over from the old to the new governor be sure that the gear is a good snug fit on the shaft and the key is a good fit in the keyway. The gear should not have to be driven on but should slide over the shaft when tapped with a wooden hammer.

Resetting Speeds

The engine speeds are 275 RPM at idle and 740 RPM at full throttle. When changing out a governor the following procedure should be followed to reset the engine speeds:

1. Before removing the old governor, set the throttle in idling position and remove the top cover of the governor. Be careful that no dirt is admitted.

2. Measure the distances "A" and "B", shown on Fig. 33 B-1, with a scale and straight edge. "A" is the distance from the top of the governor casing to the top of the speeder spring plug. "B" is the distance from the top of the casing to the hole center at the end of the speed adjusting lever.

3. Remove the old governor. Put the speed adjusting lever on the speed adjusting shaft of the new governor and make the distances "A" and "B" correspond as closely as possible with the measurements taken on the old governor.

4. After changing over the governor drive gear, apply the new governor and start the engine to try the speeds.

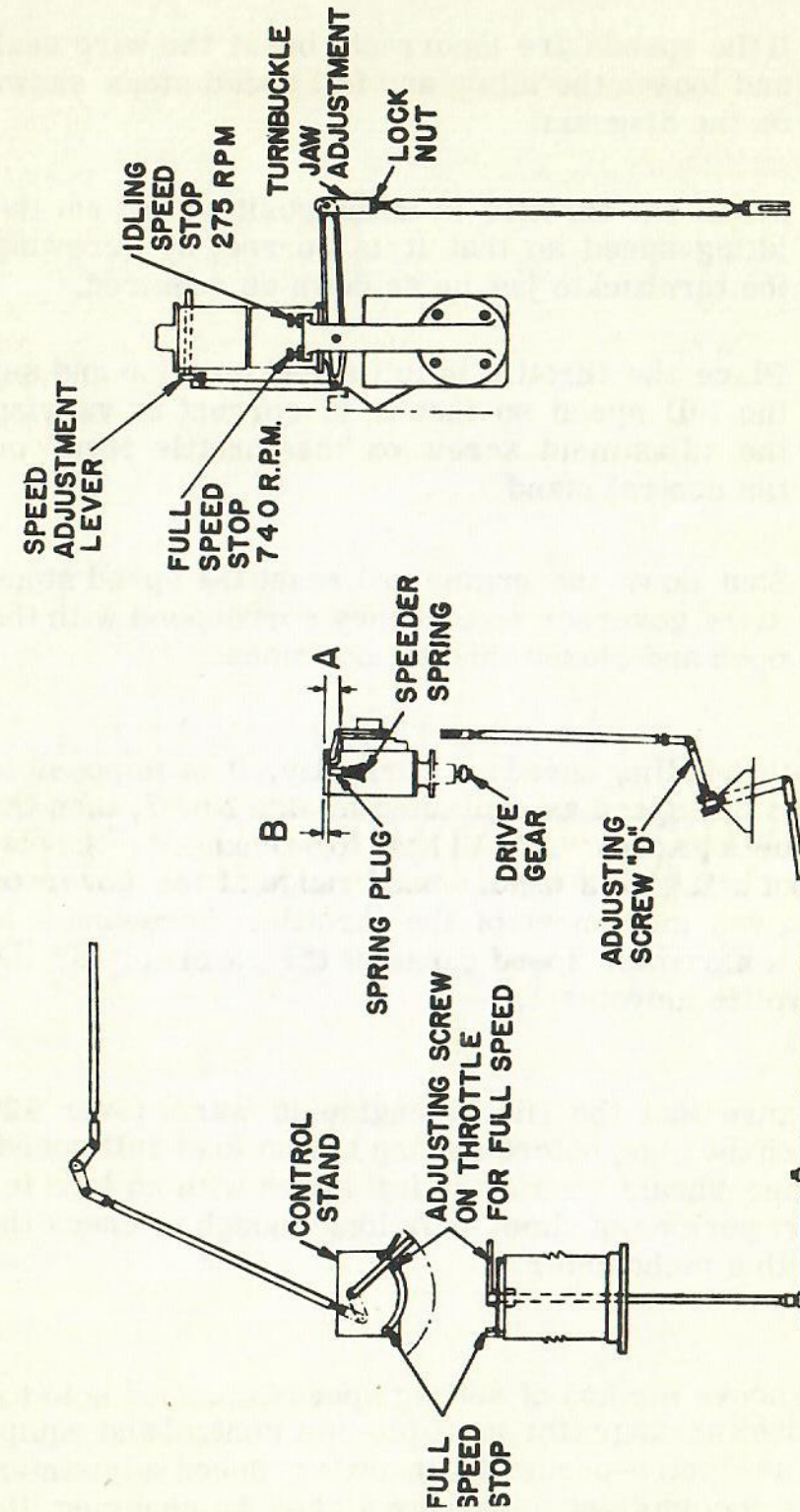

FIG. 33 B-1
SPEED ADJUSTMENT DIAGRAM

5. If the speeds are incorrect, break the wire seal and loosen the idling and full speed stops shown on the diagram.

6. Place the throttle in idling position and set the idling speed so that it is correct by screwing the turnbuckle jaw up or down as required.

7. Place the throttle in full speed position and set the full speed so that it is correct by varying the adjustment screw on the throttle lever on the control stand.

8. Shut down the engine and reset the speed stops at the governor so that they correspond with the open and closed throttle positions.

If with the idling speed set correctly, it is impossible to set the full speed as explained in step No. 7, then the large adjusting screw "D" will have to be changed. Screwing this out will give a wider speed range at the governor for the given movement of the throttle. Screwing it in will give a narrower speed range at the governor for the given throttle movement.

Be sure that the Diesel engine is warm (over 120 degrees on the gage) before setting the no load full speed. The engine should be run at full speed with no load for only short periods of time, only long enough to check the speed with a tachometer.

The above method of setting speeds does not hold for locomotives arranged for multiple unit control and equipped with an electro-pneumatic throttle. Speed adjustment on these locomotives is accomplished by changing the lever and shaft between the throttle operator and the governor.

REMOVING ENGINE AND GENERATOR

1. Disconnect top radiator shutters from levers at fan box and cab, if automatic control is not used.

2. On 1000 HP, disconnect turbocharger exhaust stack from hood. On 660 HP, disconnect muffler from hood. Disconnect exhaust stack extension.

3. Disconnect headlight cable plugs on both sides of hood.

4. Remove hood, after removing water filling plug cap and hood bolts.

5. Disconnect air compressor from Diesel engine.

6. Remove radiator fan drive, auxiliary generator and exciter and traction motor blower belts.

7. Disconnect lube oil, fuel oil, water and air piping necessary to "free" Diesel engine.

8. Disconnect main generator pad bolts and traction motor to generator cables.

9. Disconnect electrical lead to low lube-oil pressure switch.

10. Pull out engine hold down base bolts, if used, or the stud nuts.

11. Remove engine with generator by lifting under lugs at each end of engine. Mark shims under engine.

12. Set engine at 4 points at least 24 inches above floor to make room for oil pan.

ENGINE BASE

The engine base, Fig. 34-1, is of cast iron construction, and has seven main bearing seats and caps which are bored in line to receive the main bearing shells. There are five intermediate bearing caps, one middle bearing cap and one thrust bearing cap which are held in place by studs and nuts.

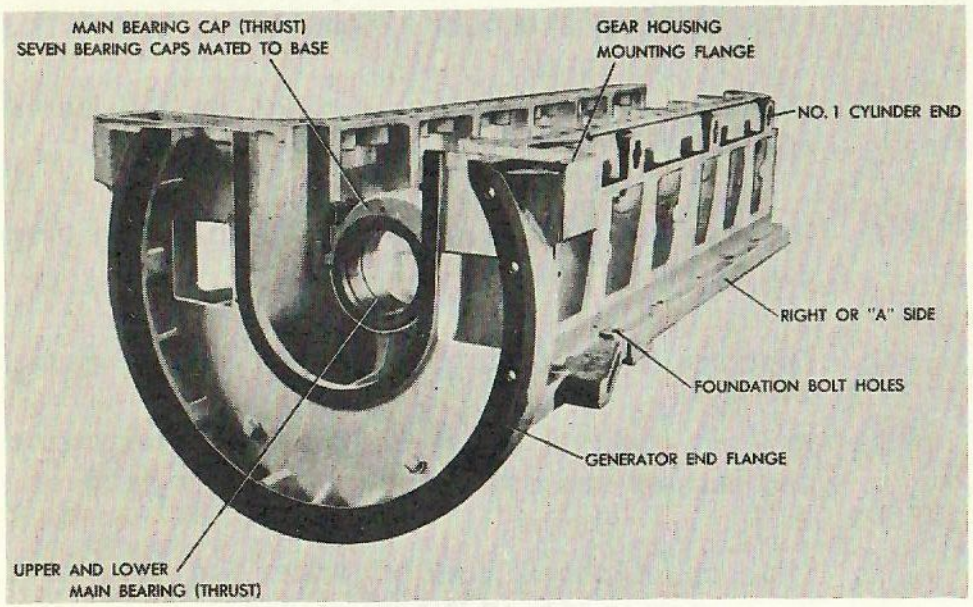

FIG. 34-1
ENGINE BASE

Screens are fitted across the base at each cylinder location and are held in place by studs, lockwashers and nuts.

Two openings on each side of the base give access to the crankshaft and its bearings. Covers enclose these openings by sliding them over studs driven into the side of the base and tightening them with washers and acorn nuts. Special gasket sections are applied to each cover to prevent oil leakage.

A lubricating oil header is mounted in the base from which oil is supplied to the main bearings, valve mechanism, camshafts and gear train. Lubricating oil is carried in the base below the base screens. A bayonet

gauge with high and low level markings is provided to check the lube oil level.

The opening at the free end is completely enclosed by the base end cover assembly while the opening at the generator end is sealed by the oil catcher. The flanges of the oil catcher are sealed with a non-hardening compound which may be removed with alcohol. A lip turned concentric with the main bearing bore is provided on the generator end as an aid in aligning the generator frame. Space is provided at the generator end for the gear train.

Ventilating holes for exhausting part of the cooling air from the generator are located on each side of the base. The holes are covered by a heavy screen. Oil separator type crankcase vents are installed in the base behind these perforated screens.

At the free end of the engine on the fuel injection pump side ("B" Side) is the engine barring hole cover while on the air manifold side ("A" Side) is the rubber mounted bracket for the low lube oil pressure switch.

Encased in the free end cover are the lubricating oil strainers. The clean out hole and cover are located below the oil strainers.

BASE MAINTENANCE

1. Renew the following gaskets:

   Side covers
   End covers
   Lube oil strainer cleanout cover
   Lube oil inlet flange
   Barring hole cover
   Lubricating oil header
   Cover at generator end

2. Clean base and oil sump screens.

3. Wash and inspect base interior. Paint with Pittsburgh Glass Company Red Sealer No. 50031 or its equivalent.

4. Inspect and tighten:

   Camshaft bearing oil lines and fittings
   Main bearing oil lines and fittings
   Pushrod lifter bracket oil lines and fittings

CYLINDER BLOCK

The cylinder block, Fig. 35-1, houses and supports the six cylinder liners and provision is made for the installation of camshaft bearings. It is secured to the base by long and short studs anchored in the block. Eight studs are driven in the upper side at each cylinder for the attachment of cylinder heads.

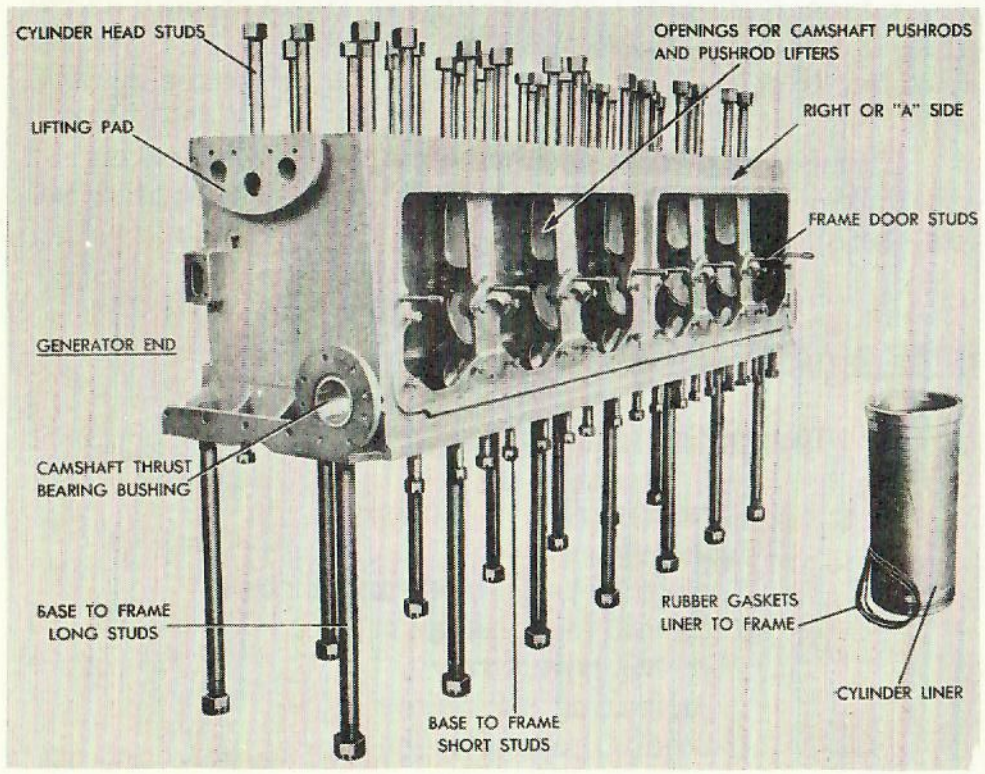

FIG. 35-1
CYLINDER BLOCK

The inlet and exhaust valve pushrods, with attendant gear such as cam rollers and their brackets, and the main camshaft are also housed in the cylinder block. Covers enclose this mechanism.

Water flow to the cylinder heads is through grommet-sealed water passages communicating between the cored water spaces of the head and frame.

A cast-in header between the water pump suction head and a flange boss on the front end of the frame provides passage for the circulating water from the cooling radiator discharge line to the water pump. Two 3/16 inch holes drilled in the inner wall of this head serve as vents and drains.

Lifting lugs are cast integral with the block at each end.

CYLINDER BLOCK REMOVAL

1. Remove rocker boxes, water manifold and elbows, air and exhaust manifolds, cylinder heads, pistons and connecting rods, water pump, gear casing and gears.

2. Disconnect associated piping.

3. Remove governor, fuel pump drive shaft, fuel pump housing and fuel filter.

4. Remove top studs from end casing.

5. Remove long and short block stud nuts and block to base dowels and with a suitable sling around the lifting lugs at end of the block, lift off the block.

CYLINDER BLOCK MAINTENANCE

Remove cylinder liners. Clean and inspect liner seats. Thoroughly wash interior of block and inspect inside surface. Remove pushrod lifter and camshaft, clean and inspect this section of the block. Paint interior of block with Pittsburgh Glass Company Red Sealer No. 50031 or equivalent.

CYLINDER BLOCK APPLICATION

1. Clean and file lightly both block and base fits.

2. Inspect camshaft bearings in the block for burrs and paint. Clean if necessary. Apply light film of lubricating oil to the bearings. Install the camshaft leaving it so the gear end of the shaft does not extend beyond the block.

3. Lift the block by the lifting lugs on each end or with straps across No. 3 and No. 4 cylinders.

4. Put block on base. Take care that the studs do not strike the edge of the holes.

5. Square the block up by checking the faces at the lubricating oil pump end of the block and base.

6. Check the fit of the block to the base with .0015 inch feeler on both sides. If the feeler enters, apply the small block to base nuts at this point and snug them up. If the feeler still enters, the block must be lifted and the cause determined and corrected.

7. Install camshaft gear and lower thrust collars. A rope placed through the pushrod holes at the top of the block and under the camshaft at No. 2 and No. 5 cylinder will be of help in putting the shaft in place. It is not necessary to time the gear or to apply the key at this time. Tighten the camshaft gear nut.

8. Clean a spot six inches long at each end of the machine face at the base and block fit on the air intake side of the engine.

9. By the use of depth micrometers, at the spots cleaned on the block and base machined faces, square the block up until the reading at one end is within .002 inches of the other.

10. Check the camshaft gear to idler gear clearance with a dial indicator, if available, if not, with feelers. The clearance should be .008 - .011 inches.

11. If improper clearance is found, shift the block until .008 - .011 inch gear clearance is obtained and check the block again for square. Thus, the block is in alignment when the gear clearance is .008 - .011 inches and the faces of the block and base are within .002 inches in their length of being parallel.

12. Tighten several of the small frame nuts.

13. Ream dowel holes with No. 13 reamer until the hole cleans up. Mark reamer as to position of fit in dowel hole and "mike" reamer and have dowel made to fit.

14. Drive dowels with light coat of white lead.

15. Pull dowels out, lift block, wipe joint surface clean, spply Osotite or its equivalent. (Heavy coat).

16. Let block down within about one inch of base; apply dowels and let block on down.

17. Tighten all nuts and bolts.

AIR MANIFOLD AND FILTER

On the 1000 HP engine one end of the air inlet pipe connects to the air manifold while the other end connects

to the turbocharger. Gaskets seal the joints at these connections.

Gaskets are also used between the air manifold and the cylinder heads to prevent dirt from being drawn into the engine on the suction stroke. The intake air filter is mounted on a filter box which is bolted to the compressor end of the turbocharger.

On the 660 HP engine the air manifold is made in two rectangular sections and are bolted to the cylinder heads with a gasket between the manifold and each head. Panel type air filters fit into these sections. A crankcase breather with an oil separator in the line is connected between one end of the air manifold and the camshaft housing of the cylinder block.

On some of the older engines a pipe type manifold is used with a cylindrical filter mounted on one end.

AIR FILTER MAINTENANCE

Filters should be serviced every 200 or 300 hours in switching service under average conditions. Servicing consists of washing, rinsing, oiling and draining.

Filter Washing

Washing is best accomplished by immersing the filter in an agitated hot cleaning solution for one hour. Agitation can be accomplished with perforated steam pipes. Cleaning compound should be Oakite 24 or equal with approximately 4 ounces of cleaning compound used per gallon of water.

Filter Rinsing

The process of rinsing is merely to protect the filter from effects of the caustic solution and may be accomplished by immersing in a tank of fresh water or spraying fresh water through a nozzle.

Filter Oiling

The only way to be sure of having all the filter media coated with oil is to dip the filter into a tank of oil for approximately 6 seconds until bubbles start to rise to the surface. In order to prevent emulsification of the rinse water remaining on the filter with the oil it is recommended that the oil be kept at a temperature of approximately 110 to 120 defrees F. with suitable arrangements for draining off collected water at periodic intervals. An oil of from SAE 40 to SAE 60 viscosity is recommended for temperatures above freezing and SAE 10 to SAE 20 below freezing.

Filter Draining

Filters should be drained from 16 to 20 hours at a temperature equal to or 10 degrees above the temperature at which the filters are to operate.

In no case are they to be drained at temperature above 125 degrees F. Ovens in which the temperature is maintained constant are suitable for this purpose.

EXHAUST MANIFOLD

On the 1000 HP engine there is an upper and lower exhaust manifold. The exhaust tees of the upper manifold is attached by capscrews to No. 2, 3, and 6 cylinder heads. While the exhaust tees of the lower manifold are attached to No. 1, 4, and 5 cylinder heads. Gaskets seal these joints which are tightened by capscrews. An end cover and gasket enclose one end of the lower manifold.

The manifolds are made in sections with an expansion sleeve located between the No. 4 and 5 exhaust tees on the upper manifold and between the No. 2 and 3 tees on the lower manifold. Expansion joints also form the connection between the exhaust manifolds and the turbocharger. Rings are used to seal all these expansion joints.

The manifolds are covered with insulation and jacketed.

On the 660 HP engine there is one manifold which is insulated and jacketed. Gaskets seal the joint between the exhaust manifold elbows and the cylinder heads and the manifold and muffler. Capscrews are used to tighten the manifold to the heads.

EXHAUST MANIFOLD MAINTENANCE

Renew rings on expansion joints and all gaskets.

VALVE LEVER MECHANISM

The air inlet and exhaust valves are operated from the main camshaft by means of the lifter, pushrod and rocker shaft (valve lever) assemblies.

Each cylinder unit has a lifter assembly, Fig. 36-1, which consists of two pushrod lifters having a common shaft as a fulcrum and a supporting bracket which is secured to the main frame by four ream bolts. The lifters have rollers which are forced to follow the profiles of the cams by the heavy valve springs. The air inlet valve rocker shaft has a buffer spring which supplements the action of the springs on the valve itself.

The pushrod ends of the lifters are fitted with hardened steel seats into which the lower ends of the pushrods are fitted. The pushrod ends of the rocker shafts, Fig. 37-1, carry hardened steel adjusting screws which, hav-

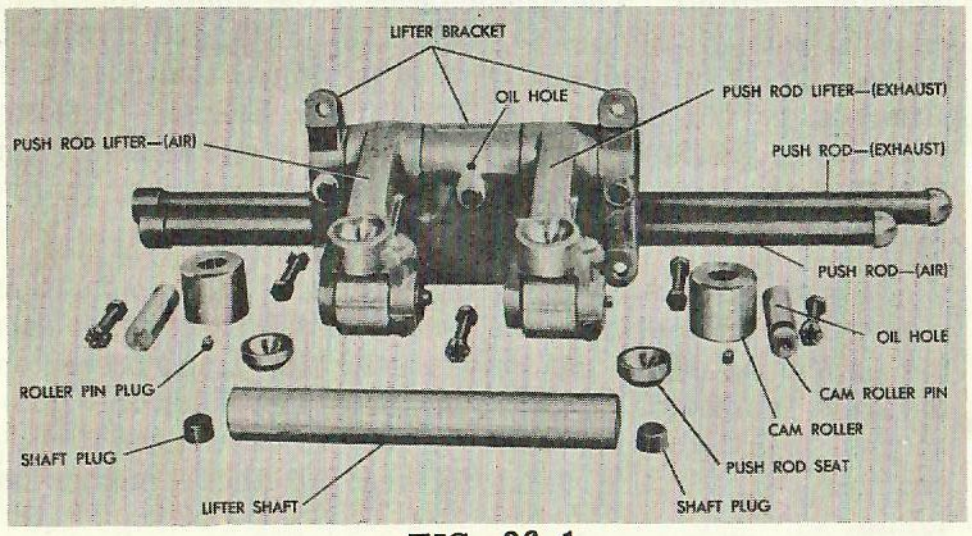

FIG. 36-1
PUSHROD LIFTER

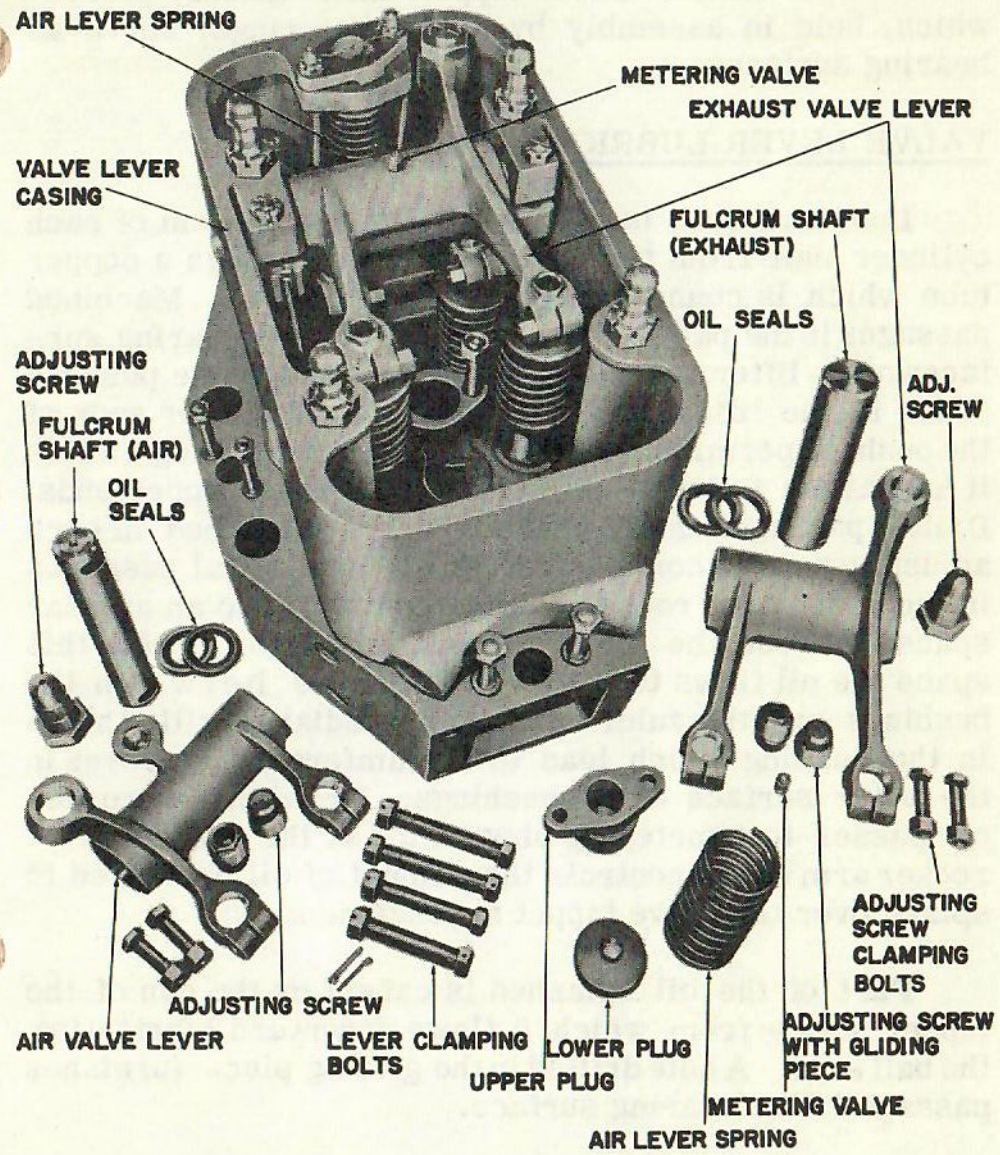

FIG. 37-1
VALVE LEVER MECHANISM

ing a spherical head, ride in hardened seats fixed in the upper ends of the pushrods. These screws are for the purpose of adjusting the valve clearances. The valve ends of the rocker shafts are fitted with valve tappet assemblies which may be used for adjusting the clearance of individual valves. These tappets have "gliding pieces" which, held in assembly by steel snap rings, serve as bearing surfaces.

VALVE LEVER LUBRICATION

Lubricating oil is supplied to the mechanism of each cylinder unit from the main oil header through a copper tube which is connected to the lifter bracket. Machined passages in the parts lead oil to the several bearing surfaces of the lifter assembly. Holes drilled in the pushrod seats in the lifters and in the balls on the lower ends of the pushrod permit oil to flow into the rods through which it is passed to holes in the ball seats at the upper ends. Drilled passages and an annular groove machined in each adjusting screw, communicating with additional passages in the respective rocker shafts, convey oil to an annular space between the fulcrum shaft bushings. From this space the oil flows through the clearance between the bushings and the fulcrum shaft to radially drilled holes in the bushing which lead to circumferential grooves in the outer surface of the bushings. From these grooves oil passes to a metering plug on top of the exhaust valve rocker arm which controls the amount of oil permitted to splash over the valve tappet arrangement.

Part of the oil splashed is caught by the cup of the tappet screw from which it flows downward lubricating the ball seat. A hole drilled in the gliding piece furnishes passage to the bearing surface.

VALVE LEVER CASING REMOVAL

Remove the four cotter-pinned nuts that hold each of these assemblies to their respective cylinder heads after removing fuel pipes and lift the assemblies from the engine with suitable tackle.

VALVE LEVER MAINTENANCE

1. Remove the two allen head pipe plugs located in one side of the rocker box casing.

2. Remove the two clamping bolts of the exhaust valve lever fulcrum shaft and by tapping a rod inserted through the upper pipe plug hole, drive the fulcrum shaft from the casing and remove the lever assembly.

3. Remove the two clamping bolts of the air inlet valve lever fulcrum shaft and by means of a rod inserted through the lower pipe plug hole, also drive this fulcrum shaft from the casing and remove the lever assembly.

4. Thoroughly clean the lever assemblies by immersing in fuel oil or kerosene and then blow the oil passage clear by air pressure.

5. Examine the fit of the respective fulcrum shafts with their bushings. If the clearance is found to exceed .010 inches, check the diameter of the parts concerned and renew worn parts. The new running clearance between the shaft and bushing in the air lever should be between .003 to .005 inches; between the shaft and bushing in the exhaust lever, .004 to .006 inches.

6. Examine the valve tappet parts for wear and cracks. Renew those of doubtful appearance.

7. Examine the ball of the adjusting screw on the pushrod end of the respective levers. If scored or otherwise damaged, replace the adjusting screw. Do not reface the ball.

8. Remove and clean the spray plug on top of the exhaust valve lever. When reapplying, locate the spray plug so that the oil flow is directed evenly between the exhaust valves to strike the valve lever casing.

9. Renew the oil seals on each end of the air and exhaust valve levers.

10. Reassemble levers in rocker box, install expansion plugs over ends of valve levers and insert pipe plugs.

PUSHROD MAINTENANCE

1. Remove pushrods and check for straightness. The short rod operates the air valves while the long rod operates the exhaust valves.

2. Examine the ball seat on the upper and lower end for scoring or wear. These parts are hardened and if properly lubricated, should show no wear. However, if any are found faulty in appearance, they may be renewed. As there is an interference fit between the pushrod ends and the tube, the ends are shrunk on by expanding the tube with hot water or shrinking the ends with dry ice.

   The tubes should be free from scale and dirt and after applying the ends, the ends must be flush with the ends of the tube.

   The overall length of the exhaust valve pushrod is 38-5/16 inches plus or minus 1/32 inch; the air valve pushrod is 36 inches plus or minus 1/32 inch. The length of the exhaust valve pushrod tube without the ends is 34-5/16 inches plus or minus 1/32 inch; the air valve, 32 inches plus or minus 1/32 inch.

PUSHROD LIFTER MAINTENANCE

1. Remove the bolts holding the lifter bracket to the frame and lift out the lifter assembly.

2. Remove the shaft keeper bolts and slide out lifter shaft. The clearance between the lifter shaft and bushings when new is .0015 - .0035 inches with a condemning limit of .006 inches. The bushings have a press fit of from .001 to .004 inches.

3. Remove the bolt locking the roller pin in place and slide out the pin. The clearance between the roller and pin when new is .002 - .004 inches with a condemning limit of .007 inches. The pin has a drive fit in the lifter with the roller and pin assembled in the lifter. There should be a clearance of from .006 to .012 inches between the roller and lifter casting.

4. Driven into the top portion of the lifter is a renewable pushrod seat. In the center of the seat is a tapped hole into which a puller is inserted to remove the seat. A new seat has a .0005 - .0015 inch drive fit.

5. Thoroughly clean all parts before reassembly.

AIR VALVE LEVER SPRING

An air valve lever spring is used to keep pressure on the air valve pushrod. It rests on a lower plug which in turn rests on a seat in an extension of the air valve lever and is held in place by an upper plug and holding nuts.

Replace broken springs and worn spring seats.

VALVE LEVER CASING GASKETS

Apply new casing to head gaskets and casing to cover gaskets before installing the valve lever casing. Also use new grommets for the fuel injection pipes.

CYLINDER HEADS

The cylinder heads, Fig. 38-1, have cored spaces for cooling water. Water passages to the cylinder block are fitted with synthetic rubber grommets. Cooling water discharge from the heads is carried to the water outlet header by individual elbow connections. Cored passages also permit the admission of scavenging air and the expulsion of exhaust gases. Metal to metal joints of the male and female type between the cylinder heads and cylinder liners, prevent the escape of gases from the cylinders.

Each head has suitable chambers for two air inlet valves, two exhaust valves, and a fuel injection nozzle.

Seats are machined in the heads for the exhaust and inlet valves.

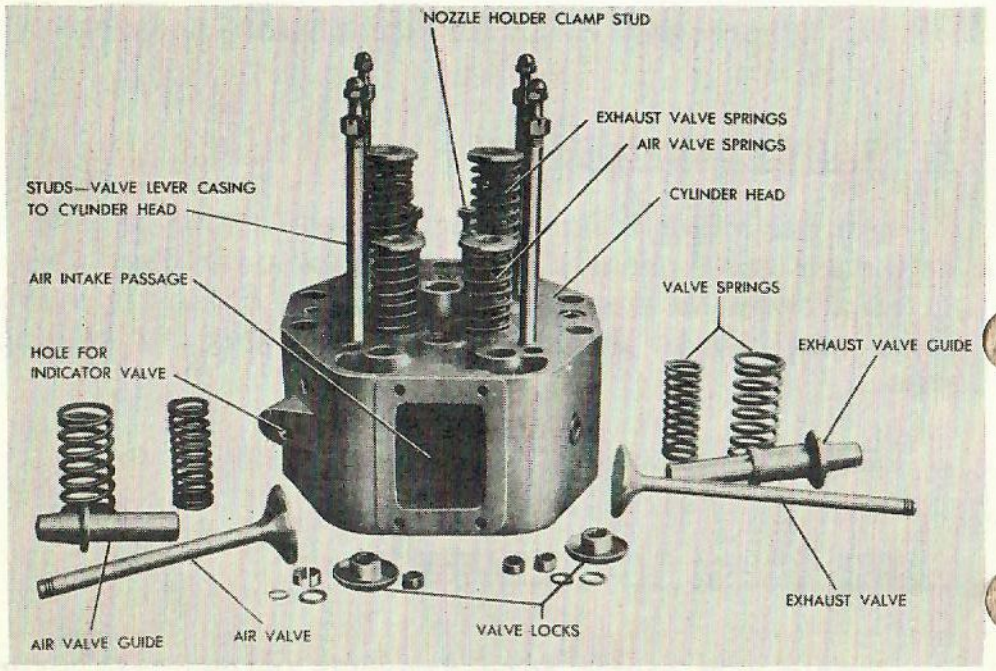

FIG. 38-1
CYLINDER HEAD

Uniformly spaced holes are provided for the cylinder head holding-down studs.

Secured to the top of each unit is a casing which, with a suitable cover, encloses all gear mounted on the head.

CYLINDER HEAD REMOVAL

1. Remove valve lever casing and pushrods.
2. Remove air and exhaust manifold flange cap-screws.
3. Remove water outlet elbow between water outlet header and cylinder head.
4. Remove cylinder head nuts.
5. Remove fuel injection nozzle.
6. Attach lifting bar to studs and lift off head.

CYLINDER HEAD DISASSEMBLY

Air and Exhaust Valve Removal

1. Remove all valve stem caps.
2. Remove all lock springs from the spring retainers by prying with a screw driver or other similar tool inserted in the recess provided in the spring retainers. Screw the fulcrum block of the valve spring compressing tool on the valve lever casing stud

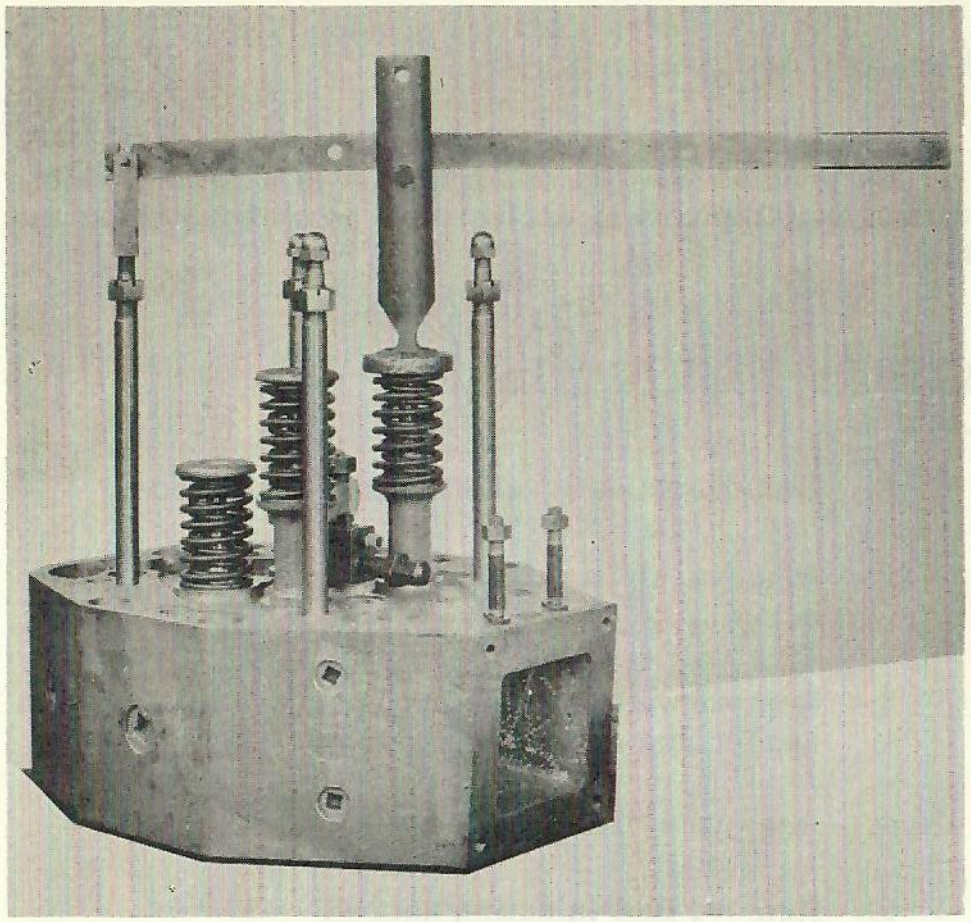

FIG. 39-1
VALVE SPRING DEPRESSOR

nearest the valve concerned, Fig. 39-1. Place the tool sleeve on the valve spring retainer and hook the compressing lever under the pin of the fulcrum block. Compress the valve spring until the gasket and split lock can be removed. After removing these parts, remove the valve spring retainer and the inner and outer valve springs.

3. Repeat the above operations on the other air and exhaust valves.

4. Turn the head on its side and remove the valves.

5. In case it is desired to replace a valve spring without removing the head, put the piston on top dead center, remove rocker box, and using the valve spring compressor, remove the spring as in Item 2 above.

Air and Exhaust Valve Guide Removal

To remove a guide, use a steel bar reduced at one end to fit into the guide. The shoulder at the reduced end of the bar should press against the bottom of the guide. Drive against the bar to force the guide out of the head.

CYLINDER HEAD MAINTENANCE

Air and Exhaust Valve Guides

The clearance between the air valve and guide when new is .003 - .006 inch; between the exhaust valve and guide, .007 - .010 inch. New guides should be applied when blowby becomes excessive or the clearance exceeds .015 inch.

Valve seats should never be reseated when a valve stem guide is worn beyond the maximum allowable tolerance. There it may be necessary to install new guides before a valve reseating job can be done.

To insert a new guide into a cylinder head, use a tool which fits into the top of the guide with a shoulder machined to fit the chamber on the guide, extending over the outside diameter of the guide. Start the guide in the head, insert the tool into the guide and drive into place. When new guides are inserted into a cylinder head they must be reamed to give the proper clearance between the valve and the guide. Hammering the guides in place tends to distort the inside diameter, making reaming necessary. After reaming the valve guides the valve seat should be checked to see if it is true with the guide.

Cylinder Head Valve Reseating

The cylinder head valve seats and valves should be checked for pits and wear. If it is only necessary to retouch the seats this may be done by ordinary hand grinding. A light spring, under the valve head, should be used to keep the full weight of the valve off the seat. Apply valve grinding compound to the seat; insert the valve through the spring and down into its guide, then with the valve grinding tool oscillate the valve about 1/4 turn to form a near perfect seat, changing positions by 1/8 turns until the 360 degrees have been covered. Remove the grinding compound and spot the valve to its seat with prussian blue. Repeat the grinding operation, if necessary. New valves used in old cylinder heads should always be ground in; the valve face diameter is 4 inches.

If the valve seats are found to be badly pitted or spotted they should be reseated with a hand seating reamer, which may be obtained from the locomotive manufacturer. The reseating tool is made of two parts, the reamer and the pilot stem, which fits into the reamer with a No. 3 Morse taper fit. The pilot stem is inserted into the valve stem guide to insure the cutting of a true seat. Apply a wrench to the reamer and remove just enough metal to get under the spots or pits. Grind the valve to its seat as described in the first paragraph. After a few reseating operations a shoulder will be formed at the outer edge of the seat and counter-boring tool must be used to remove the shoulder. If the shoulder is not removed the passage of air or exhaust gas will be restricted and the engine will not function normally. The counter-boring tool is provided with a pilot stem and is used exactly like the reseating tool. Fig. 40-1 shows three details picturing reseating and counter-boring. The first detail shows a new cylinder head giving the maximum distance of 5/16" of metal that could possible be reamed out before the valve would pull out of its seat. The

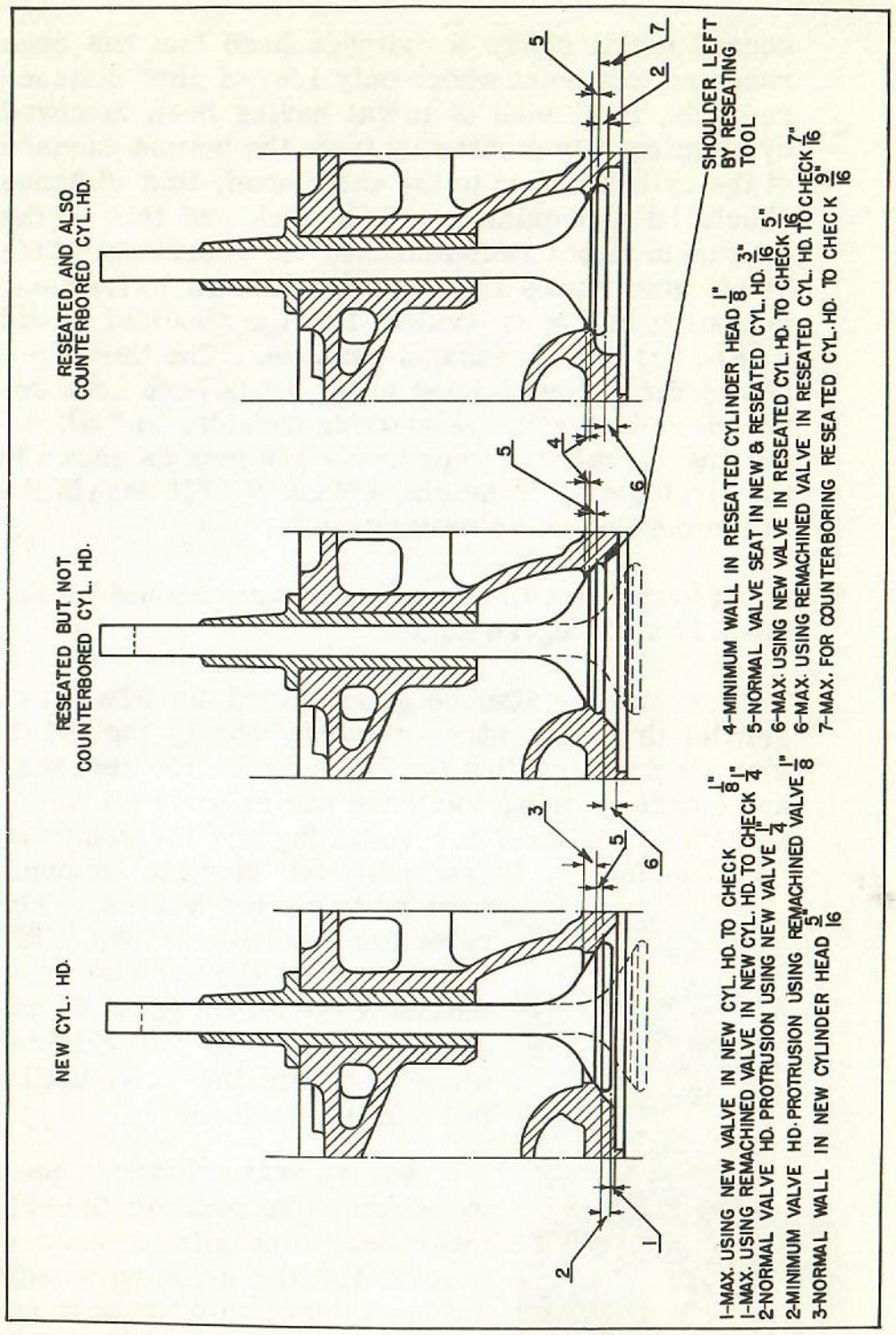

FIG. 40-1
RESEATING AND COUNTERBORING
CYLINDER HEAD VALVE SEATS

second detail shows a cylinder head that has been reseated to a point where only 1/8" of this distance remains, 3/16 inch of metal having been removed by reaming. By measuring from the bottom surface of the cylinder head to the valve head, this distance should be approximately 5/16 inch and this is the maximum depth recommended for reseating. This detail also shows the shoulder formed by frequent reseating and it is evident that the shoulder would restrict air or exhaust passage. The third view shows the cylinder head after it has been counterbored, removing the restricting shoulder and allowing the valve head to protrude 1/8 inch as shown in the first detail. The dimensions of 3/16 inch is the recommended valve bearing surface.

If old valves are to be used, the seats should be refaced at a 45 degree angle.

Valve seats may also be ground with an electric grinder driving a stone grinding wheel, Fig. 41-1. If an electric grinding set is available, the reseating and counter-boring tools are not required as the stone may be used for reseating and for removing the shoulder. When using an electric grinder, first reface the valves. The valve stem diameter is .870 - .871 inches. Apply the valve stem to the chuck and adjust for a 45 degree angle. Dress the grinding wheel and face the valve until a full seat is obtained.

FIG. 41-1
VALVE GRINDING

A valve seat grinder is used to face the valve seats in the cylinder head; the pilot is used as a guide for the grinding wheels and is centered with the seat entering it in the valve guide. Before starting the face seating operation, the bore of the valve guide should be thoroughly

cleaned, using the guide reamer, to remove all the carbon deposits. Worn guides should be replaced and the valve pocket, if necessary, by using the grinding wheel upside down, before grinding the valve seats.

Dress the grinding wheel to give it a 45 degree angle grinding face; place the pilot in the valve guide and the grinding wheel on the pilot and grind the seat, first with the roughing wheel and then with the finishing wheel.

Check concentricity of the valve seat with respect to the valve guide using a dial indicator mounted on the pilot in the valve guide, Fig. 42-1. Concentricity must be within .002 inches; regrind the seat if the limit is exceeded. Check angle of the seat with a valve whose face angle has been checked. Blue the valve, insert it in the guide and bounce it against the cylinder head valve seat, Fig. 43-1; 80% contact indicates a good seat. Then lap the valve to the valve seat.

Indicator Hole Plug

Each cylinder head is drilled and tapped for an indicator attachment. The hole is closed with a special plug. This outlet may also be used for com-

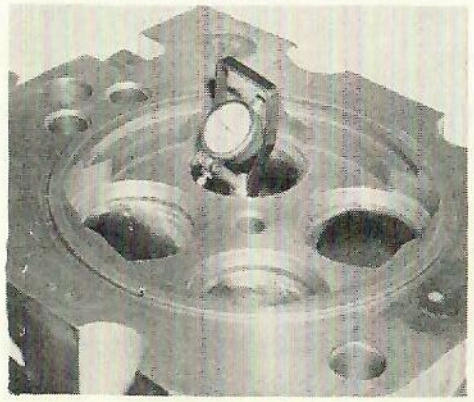

FIG. 42-1
CONCENTRICITY
OF VALVE SEAT

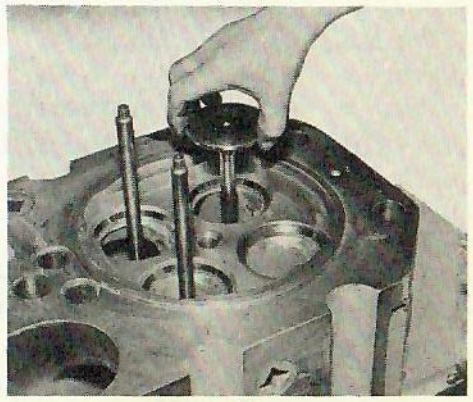

FIG. 43-1
ANGLE
OF VALVE SEAT

pression release when barring the engine over or to assist in starting the engine in cold weather if the battery should be low.

When servicing a head, this plug should be removed and the hole cleaned.

Compression Seal Ring

As the cylinder head to liner is metal to metal, the seating area must be in good condition. Lap the seating area on the compression seal ring, Fig. 44-1, with grinding compound and a surface plate until the seating area shows a continuous seat at least 1/16 inch wide.

If the seat should become nicked and nick is too deep to be taken out by lapping or the original 1/4 inch height of the seal ring has been reduced .025 - .030 inches by lapping or scraping, the entire lower surface of the head should be remachined to bring the height of the compression seal ring back to its original measurement of 1/4 inch which will give the correct clearance between piston to head and head to block. No more than a total of 1/32 inch should be removed from the bottom of the cylinder head.

Nozzle Hole Bushing

The fuel injection nozzle hole in the center of the head is bushed with a steel bushing which has a press fit.

If a water leak appears around the bushing, drill out the old bushing and press in a new one. The new bushing will seat on a shoulder about two inches down inside the cylinder head nozzle hole. After the bushing seats it will be necessary to machine approximately 1/8 inch off the top of the bushing to make it flush with the cylinder head.

Nozzle Clamp

The fuel injection nozzle fits into a hole located in the center of the head and is held in place by two studs and nuts and a clamp. The bottom of the nozzle hole is recessed to hold the nozzle gasket. Make certain the old gasket has been removed and a new one applied before installing the fuel injection nozzle.

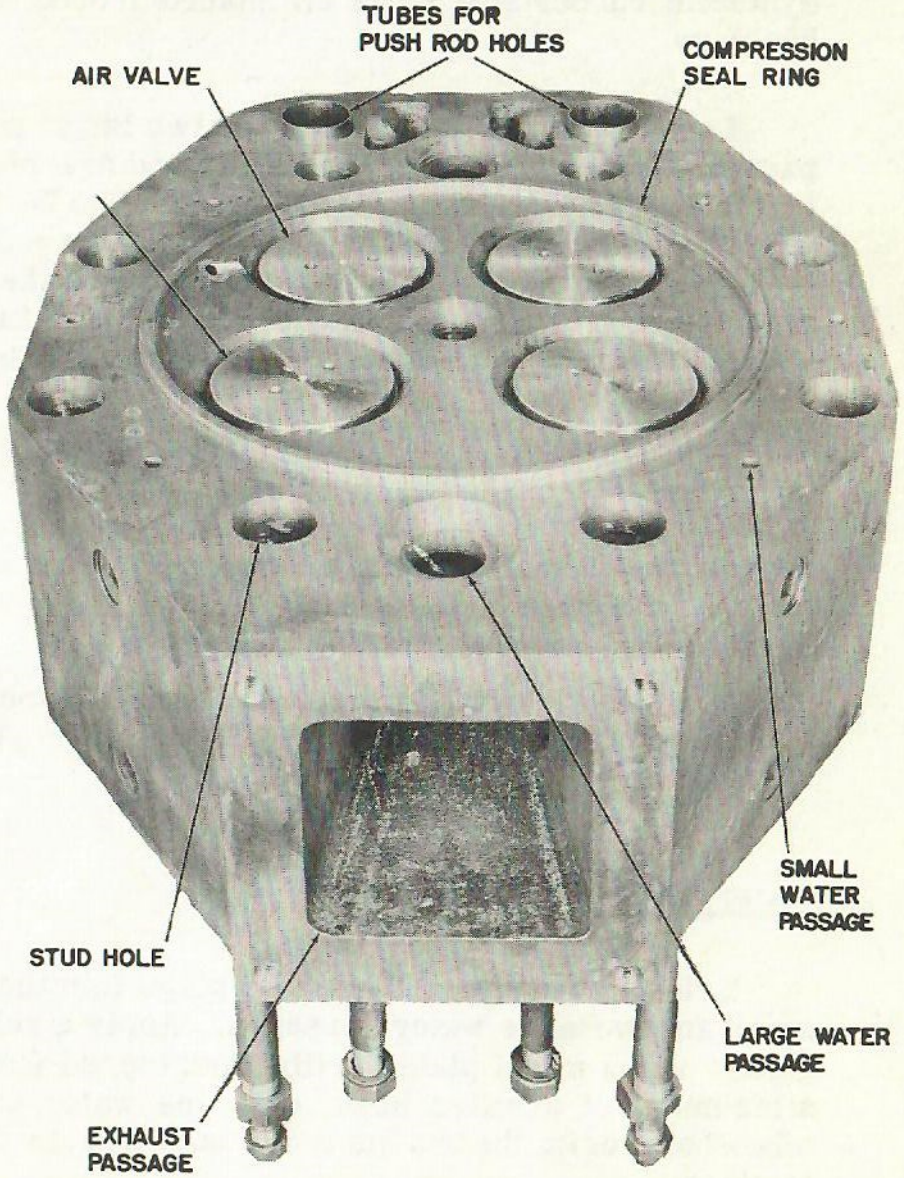

FIG. 44-1
CYLINDER HEAD COMPRESSION SEAL RING

Bushings and Gaskets

Bushings are pressed into the two pushrod holes in the bottom of the head, Fig. 44-1. These serve as a guide when applying a head and also as an additional oil seal as lube oil from the valve levers drain into the engine base through the pushrod holes. Synthetic rubber seal rings are placed around these bushings.

Loose bushings are used in the two large water passages between the head and block and are placed in the block before applying the head. The bushing with the large hole is placed on the exhaust side of the engine and the one with the small hole on the air side. Large rubber seal rings fit around these bushings and should be put in place before applying a head.

There are six recesses machined in the top of the cylinder block at each cylinder head location. Small rubber gaskets fit into these recesses and form a water seal between the head and block after the head has been applied.

If it should become necessary to remachine the bottom surface of the head, the bushings in the pushrod holes must first be removed.

Water Test

Drive round tapered wooden plugs into the six small and two large water passages. Apply a rubber gasket and a metal plate, drilled and tapped for the attachment of a water hose, over the water outlet elbow hole, using the two studs and nuts to hold them in place.

Water test at 50 psi gauge pressure.

CYLINDER HEAD REASSEMBLY

1. New guides were installed before valve reseating. (See cylinder head maintenance - air and exhaust valve guides.)

2. Turn the head on its side and insert the valves. Then place the head on a block of wood to hold the valves up in place.

3. Place the inner and outer valve springs over the valve stems and set the spring retainers on top of the springs.

4. Screw the fulcrum block of the valve spring compressing tool on the valve lever casing stud nearest the valve concerned. Place the tool sleeve on the valve spring retainer and hook the compressing lever under the pin of the fulcrum block. Compress the valve spring until the grooves in the valve stem protrude into the tool sleeve. Apply the split locks and then release the spring compressor. Place the fibre washer over the top of the split locks to seal the gap between the split lock halves and to prevent a cause for excessive lube oil loss. Install the snap ring and valve stem cap.

5. Apply the water outlet elbow using a new gasket.

CYLINDER HEAD INSTALLATION

1. Before installing a cylinder head, clean the seat in the liner and the seat on the head. Clean the gasket seating surfaces of the head and block. Place the gaskets for the water passages in place on the block and apply the sushrod gaskets to the head with the flat surface down. Drop the head in place. Care must be taken that the male fit on the head has entered the female fit in the

liner. If any difficulty is encountered in getting the cylinder head down after the head has contacted the gaskets, raise the head to determine if the gaskets are in position.

2. There are eight cylinder head nuts for each head. Four of these are high nuts with an expansion plug in the top. These special nuts should be applied to the studs inside the valve lever casing. The expansion plugs prevent lubricating oil from leaking down the stud threads and thence to the underside of the cylinder head.

   Before tightening the head nuts, square the heads with a straight edge to assure proper alignment of the bolt holes in the air and exhaust manifolds.

   All nuts should be tightened hand tight, then opposite nuts should be tightened, snugging up each nut the same amount. Then, with a thickness gauge, check the clearance between the cylinder head and cylinder block at six points to determine if the cylinder head is being drawn down evenly. The clearance between the head and block is 1/16 inch. At any of the six points this measurement should not differ by more than .005 to .010 inches; tighten all nuts. Use a wrench four feet long with not over 200 pounds pull on it, which is an average pull of one man; or tighten to 800 ft. lbs. torque. Excessive tightening may cause distortion of the cylinder head; liner and cracking of the block at the liner seat.

   If there should be a leak past the compression seal between the head and liner or a water leak between the cylinder head and block after the head nuts have been tightened to normal tightness, no attempt should be made to stop the leak by further tightening. The cylinder head should be removed and all parts checked to determine the cause.

3. Connect water outlet elbow to water manifold.

4. Connect air and exhaust manifold elbows to the head.

5. Install nozzle gasket and nozzle.

6. Apply valve lever casing, fuel pipes, etc.

Water Leaks

Water leaks may be caused by:

1. Defective gasket.

2. Gasket out of place.

3. Cylinder head water jacket cracked.

4. Leak at cylinder liner to block seat or crack in cylinder block liner seat.

5. Leak around cylinder head studs.

6. Leak around nozzle hole bushing.

Water leaks may be corrected by:

1. Replacement of material.

2. Inspection.

3. Water testing cylinder head.

4. Remove cylinder head and plug the six small water passage holes and the two large holes on top of the cylinder block at each head location with round tapered plugs. Apply solid gasket between suction pipe and flange on cylinder block. Make and apply an adapter to hold liner down against its seat. Connect water line to cylinder clock, drain valve and water test at 50 psi.

If water should appear on top of the block at the joint between the liner and block, remove the liner and inspect the liner seat in the block and also the seat on the liner for evidence of the location of the leak.

A crack in the fillet of liner seat in the block may be located by lightly tapping the surface below the seat with a ball pean hammer immediately after water testing the block. Spots of water will appear from the crack.

A cracked block cannot be repaired and will eventually have to be replaced. However, in order to obtain additional service out of the block, a special gasket, Cat. No. 515190-A, B or C - 1/16, 3/64 or 1/32 thick, may be placed on top of the block to seal the joint between the liner and the block. This gasket is compressed and held in place when the head is applied.

The trueness of the seat on the liner and the seat in the block may be checked by using prussian blue on fixtures designed for this purpose. After spotting the surfaces for high and low spots, either scrape or lap the surfaces until a true seat is obtained.

5. Water test the cylinder block to determine water leakage around cylinder head studs. If leakage is found, remove the stud, clean the threads on the stud and in the stud hole and apply a thin coat of glycerine and litharge paste. Drive the stud and allow the paste to set for as long a period as practical up to eight hours before applying water pressure again.

6. Refer to "Fuel Injection Nozzle Hole Bushing".

Gas Leaks at Joint Between Head and Liner

Causes

1. Seat on cylinder head or in liner not clean.
2. Seat on cylinder head or in liner burred or nicked.
3. Seat on cylinder head distorted.
4. Seat in liner distorted.
5. Cylinder head not tightened down evenly.

Corrections

1. & 2. Requires care in handling parts when disassembling and proper cleaning before assembling.

3. Distortion of the seat on the cylinder head can usually be attributed to excessive or uneven tightening of cylinder head stud nuts. To check if the seat is distorted, a surface plate is required. The surface plate is coated with prussian blue and then placed on the seat and rotated. The high spots will be marked with the prussian blue. The high spots are removed by scraping or lapping and a true bearing should be obtained.

4. Distortion of the seat for cylinder head in the liner likewise can usually be attributed to the excessive tightening of cylinder head stud nuts. To check if the seat is distorted, a fixture is required. The fixture is coated with prussian blue and then placed on the seat in the liner and rotated. The high spots will be marked with prussian blue. The high spots are removed by scraping and a true bearing should be obtained. When scraping the seat in the liner, care must be exercised to keep the seat parallel with the top of the liner.

Scraping the seats reduces the clearance of piston to cylinder head and of cylinder head to block. When .025" to .030" has been removed from the seats, the entire lower surface of the cylinder head should be remachined to bring the height of the compression seal ring back to its original measurement of 1/4" which will give the correct clearance between piston to cylinder head and cylinder head to block. No more than a total of 1/32 inch should be removed from the bottom of the cylinder head.

ADJUSTING AIR AND EXHAUST VALVE CLEARANCE

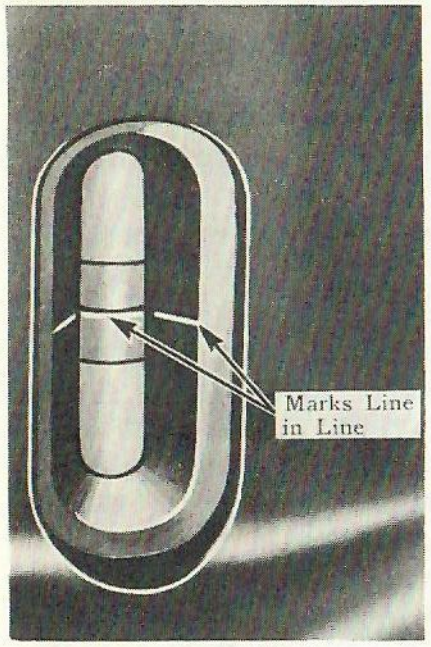

FIG. 45-1
PUMP TIMING MARKS

Bar the engine over until the timing mark on the fuel pump guide cup lines up with the marks on the fuel pump window on the up stroke, Fig. 45-1. The valves for this cylinder will then have their pushrod rollers on the cam base circle with the result all valves will be closed.

Back off the four valve clearance adjusting screws and then adjust the screw on the pushrod end of the valve levers until the valve levers are approximately level.

Insert feelers between the valve stem cap and gliding piece on the bottom of the adjusting screw, Fig. 46-1, and adjust for .016 inch clearance with the engine hot or cold. When setting the exhaust valve clearance, hold down the pushrod end of the lever so that a false reading is not obtained. Tighten all adjusting screw lock nuts.

The air valve lift (total) is 15/16 inches while the exhaust valve lift (total) is 27/32 inches.

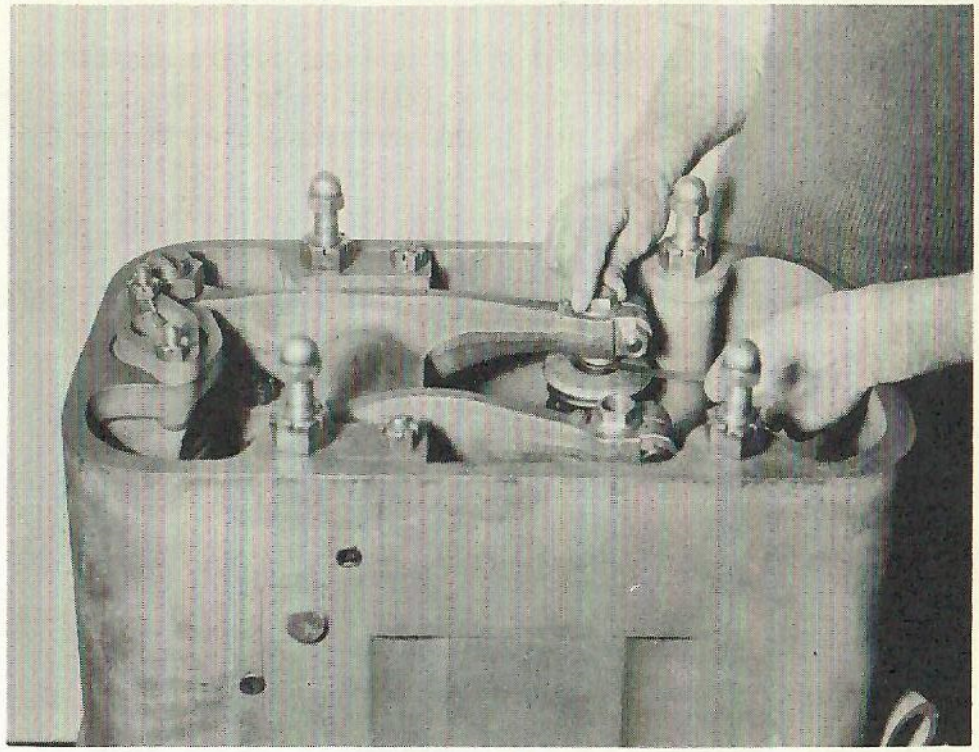

FIG. 46-1
ADJUSTING VALVE CLEARANCE

PISTONS

The piston, made of a hard close grained aluminum alloy, or cast iron, is strongly bossed to support the piston pins, Fig. 47-1. They are of the trunk type with concave heads. The 1000 HP piston head is recessed to provide clearance for the air and exhaust valves.

There are eight piston ring grooves. Six of these are located above and two below the pin bosses. The five uppermost grooves are fitted with compression rings while the groove immediately above the piston pin and those in the piston skirt are provided with lubrication oil wiper rings.

The piston with the caps installed is relieved for a considerable area about the piston pin bores.

The piston pin is fitted in its bosses with a diametrical clearance of approximately .0015 inches. When using an old pin in a new piston some scraping may be necessary to obtain this clearance.

For lifting purposes, two 5/8 inch tapped holes have been provided in the piston head.

PISTON REMOVAL

1. Drain water from engine block and turbocharger (if used). Remove cylinder head.

FIG. 47-1
PISTON

2. Grease the tops of the pistons. This is done to catch the carbon which must be scraped from the tops of the cylinders before the piston can be removed.

3. If wear has produced a shoulder at the top of a cylinder bore, it must be relieved to prevent breakage of the piston rings as the piston is being pulled from the cylinder and to prevent ring breakage after new rings have been installed.

4. As each crankpin is made ready for disassembly, it is suggested that the crankpin concerned be positioned at about 40 degrees from bottom center. Remove the cotter pins and bearing bolt nuts on that side. Rotate the shaft until the crankpin is about forty degrees on the other side of bottom center. Remove the cotter pins and nuts on that side and remove the cap and lower shell half. The crankpin must then be moved to approximately bottom center for the removal of the bearing bolts. Bearing bolts should be removed to avoid damage to crankpin.

5. Rotate the crankpin to top center and bolt the lifting bow to the top of the piston and by means of suitable tackle pull the assembly from the cylinder.

   As soon as possible after the connecting rod has cleared the crankpin, the upper shell half must be removed. In addition, the connecting rod foot must be guided through the cylinder to prevent damage to the wall.

6. When removed, the piston should be placed on a pair of timbers, resting on raised supports, with the rods hanging between the timbers and clear of the floor. The bearing caps, bolts and shells should be replaced on their respective rods for safekeeping when more than one piston is pulled.

7. Wrap crankpins for protection.

PISTON DISASSEMBLY

1. To separate a piston from a rod, remove the piston pin covers by means of the puller. Block up under the foot of the connecting rod so that the piston pin may be removed. Push the piston pin from the piston and lower the connecting rod to the floor. Remove piston from the connecting rod.

2. Remove piston rings by spreading them and sliding them up over the top of the piston.

PISTON MAINTENANCE

Piston Cleaning

Cleaning must not be delayed until the piston rings are stuck as compression then blows past the rings, resulting in removal of lubricant from walls of cylinders, which will cause undue wear of pistons, rings and liners.

Aluminum pistons should never be cleaned with emery cloth or sand paper.

If the railroad does not have the facilities to clean aluminum pistons by the Cold Method using Turco "Transpo" or Oakite Composition No. 16, or by the Hot Method using Sprex AC or Oakite No. 61, followed immediately with a hot water rinse, the piston will have to be cleaned by using paint remover or by scraping with a soft scraper.

Care should be taken to get the pistons, especially the ring grooves and the drain holes in scraper ring grooves, thoroughly clean.

Cast iron pistons may be cleaned in the same manner as any cast iron casting.

PISTON PIN COVERS

The piston pin covers or plugs should have an interference fit in the piston pin bore. Loose covers will tend to cause increased lube oil consumption as the covers seal the ends of the piston pin which is under 35 psi lube oil pressure.

If the covers are loose, either replace them or tin the edges of the old ones and scrape them until they requite tapping with a soft hammer to get them in place.

Replace damaged dowel pins.

PISTON PIN

The steel piston pin is case hardened and ground to size. In design, it is of the full floating type, being free to revolve and move, laterally within the limits of the piston pin caps. Cups, expanded into the ends of the pin, form an annular oil reservoir which insures an ample supply of oil being present for lubricating and pin cooling purposes. A number of radial holes of small diameter, communicating between this reservoir and the bearing surfaces, provide passage for the oil which is supplied from the crankpin through a rifle drilled passage in the vertical center of the connecting rod and annular grooves in the pin bushing.

The piston pin should be cleaned and a careful surface inspection made. It is good practice to remove the piston pin cups, clean the inside and magnaflux both inside and outside surfaces of the pin. The cups, are pressed into the ends of the piston pin bore and expanded into the grooves through their entire circumference with a piston pin cup expander.

PISTON PIN CUPS

After an internal inspection has been made, new piston pin cups must be installed to insure proper sealing of the oil chamber. To apply a piston pin cup, first place the pin in the locking stand, Fig. 48-1, and enter the cup in the piston pin bore. Then place the depth plug in the cup and press into the piston pin bore until the flange on the plug contacts the piston. Remove the plug and enter the expander in the cup. Roll in until the roller stop strikes the piston pin.

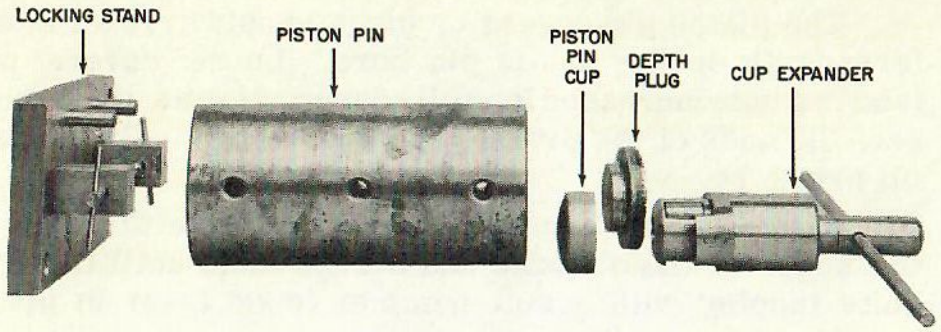

FIG. 48-1
PISTON PIN CUP EXPANDER

In use it is essential to avoid excessive spindle leads and to avoid rolling too many revolutions. It has been found that a downward axial spindle force of 200 or 300 lbs. is sufficient to roll cups properly. It has also been found that not more than eight or ten revolutions are necessary to expand the material into the groove of the wrist pin bore. The best result is obtained if the rolling tool is withdrawn from the cup after each revolution of the handle.

All wrist pins should be carefully measured before and after rolling to insure that the wrist pins have not been expended on the O.D. Any pins which have been rolled excessively will be found to have increased on the outside diameter and should not be replaced in service.

PISTON RING GROOVE WEAR

After the piston has been cleaned, check the ring groove wear by installing a new ring in each of the compression ring grooves and, using a feeler gauge, measure the clearance between the ring and groove. See Table of Clearances for the condemning limits. When the side clearance between a new compression ring and the ring groove exceeds the condemning limit, the ring groove should be remachined to take oversize rings.

OVERSIZE PISTON RINGS

Oversize compression piston rings are available for this engine in 1/32 inches, 1/16 inches or 3/32 inches.

These rings are oversize only in width to provide for truing piston ring grooves.

OVERSIZE RING	GROOVE SIZE
1/32 inch	.222 - .223 inch
1/16 inch	.253 - .254 inch
3/32 inch	.285 - .286 inch

PISTON RINGS

Piston Rings can only be inspected when the piston has been removed from an engine. Rings should be condemned if they are stuck or broken; show signs of scuffing or feathering; or the ring seat is not polished for its entire circumference, indicating poor liner contact. Piston rings, after having been removed from a piston, should not be reused as the expansion of the old rings in removing and reinstalling them causes distortion preventing their proper seating in the ring grooves and liner. Piston rings should be renewed at overhaul period.

A ring expander or canvas strips attached to the ends of the ring may be used to expand the rings. When installing them, care should be taken not to expand them more than necessary as over-expansion may cause permanent distortion. Both compression and scraper rings are tapered from top to bottom.

The compression rings must be applied with the word "TOP" facing the top of the piston. The scraper rings have two sharp edges to remove excess oil from the cylinder liner on the downward stroke of the piston. They must be applied with the wide or scraping edge facing the crankcase.

PISTON REASSEMBLY

1. Thoroughly clean piston pin and coat with clean lubricating oil.

2. Place piston upside down on the floor and lower the connecting rod into place. The piston and connecting rod for the 1000 HP engine should be assembled so that the air valve pockets in the piston crown are on the "A" side of the rod.

3. Lift connecting rod, lining up the piston pin hole with that of the piston.

4. Apply piston pin. No special positioning of the pin is necessary as it is a floating pin.

5. Apply piston pin covers.

6. Set piston and rod assembly on boards mounted on horses with the connecting rod hanging between the boards.

7. Apply piston rings.

PISTON INSTALLATION

1. Apply lifting bow to the piston and rod assembly and insert the upper bearing shell in the lower end of the rod with the mark "U" on the "A" side of the rod.

2. Coat the piston and rings well with lubricating oil.

3. Stagger the ring gaps by locating the rings so that adjacent ring gaps are at least 120 degrees apart.

4. Remove paper covering the crankpin. Oil the crankpin and connecting rod bearing shell.

5. Set ring compression on top of cylinder liner and with an overhead hoist lower the piston assembly into the cylinder. The markings on the rod should face the camshaft or "A" side of the engine.

6. The connecting rod cap should be clean and the bearing shell oiled before it is applied. Be sure the markings on the cap and bearing shell correspond with those on the rod and upper bearing shell. Caps of different connecting rods are not interchangeable - - DO NOT MIX THEM UP.

7. Apply connecting rod bolts to the rods in accordance with their markings. Snug up each of the four rod bolt nuts and then tighten them to the scribe marks. After a period of time the scribe mark may be passed in order to get the nuts tight. If this is the case, tighten the nuts up to the next cotter pin hole. Never back off on a connecting rod bolt nut.

8. Apply cotter pins of the proper size.

PISTON RING BREAK-IN

After new piston rings have been applied, it is not necessary to idle the engine to "Break-in" the rings. Experience has shown that there are no harmful effects resulting from placing the locomotive in normal service immediately following the installation of new piston rings.

CONNECTING RODS

The connecting rod, Fig. 49-1, is made of high grade drop forged steel. The piston end is bored to receive a bronze piston pin bushing. The crankshaft end is enclosed by a bearing cap which is secured to the rod by four steel bolts. Flanged half bearing shells are held in place by the rod cap. On older engines installed between the lands of the bearing caps and connecting rods are steel shims which are positioned by dowels. These shims are hardened and accurately ground to very close tolerances. Anchored to the inner sides of the bearing shims on the end sections are short babbitt lugs, which, scraped

to slightly more than the nominal running clearance, form seals which prevent the escape of lubricating oil from the bearing. These shims are omitted on later engines.

The crankpin bearing bore and the piston pin bushing bore are ground simultaneously in manufacture thus insuring parallelism and perfect alignment.

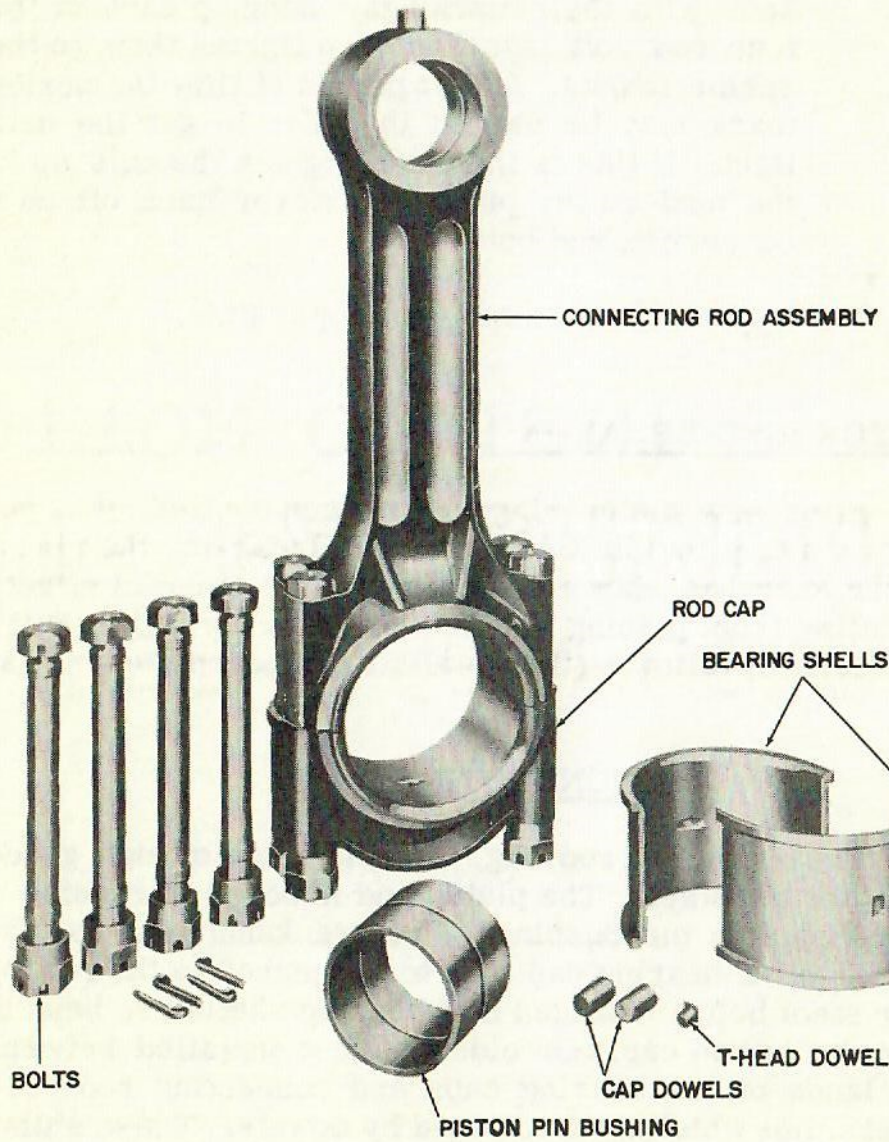

FIG. 49-1
CONNECTING ROD

A "T" head dowel fixed in the crank bearing cap prevents movement of the shell in the cap.

The bearing bolts have a clearance fit of from .0105 inches to .011 inches diametrically. At the original assembly they are stretched to an elongation of .008 inches and reference lines are then stamped on the nuts and the connecting rods. When reassembling after an inspection or overhaul, it is very important that the same strain be applied to the bolts. A micrometer or dial indicator is recommended as a positive means of checking the elongation.

All bearing bolts and nuts are stamped with identification numbers and when installed they must be located in holes bearing identical numbers. The bolts are drilled and the nuts castellated to provide passage for the cotter pins. A dowel pin in the rod prevents the bolt head from turning when tightening the nut.

Upper and lower bearing shell halves are machined to identical measurements and are interchangeable when new.

CONNECTING ROD REMOVAL

Refer to piston removal.

CONNECTING ROD MAINTENANCE

Connecting Rod Bearing Application

If a new bearing shell is to be installed, stamp the same figures in the same location on the new bearing as found on the old. The purpose of marking the bearing is to identify its location once it has been used. They are interchangeable when new but once they have formed their bearing seat, they should not be interchanged.

Wipe the cap with clean cloth, carefully fit the new bearing into the rod and cap and oil the bearing surface with clean lubricating oil. Since these are precision bearings, no filing or scraping is necessary.

The distance between the shell flange bosses of the bearing cap is approximately .043 inches less than that between the bosses of the connecting rod shell flanges. This arrangement protects the bearing bolts from any strain which might be applied if the bearing cap was subjected to side thrust.

As the shell halves are identical in dimension, the lower shell half has a total clearance of .053 inches between the shell flanges and the cap bosses while the upper shell has a total clearance of but .010 inches.

The number of cylinder unit, to which the connecting rod assembly belongs, is stamped on the connecting rod and on the cap at the bearing joint, on the main camshaft side of the engine. All other numbers are provided for the purpose of locating the parts of an assembly group and are not to be confused with the cylinder unit identification numbers.

UNDERSIZE CONNECTING ROD BEARINGS

Undersize connecting rod bearings are available for this engine. The bore of the bearing shell with the desirable crankshaft diameter for which the bearing may be used, is listed below:

SHELL SIZE	CRANKSHAFT DIAMETER
8.246 - 8.244 in.	8.240 - 8.238 in.
8.231 - 8.229 in.	8.225 - 8.223 in.
8.206 - 8.204 in.	8.200 - 8.198 in.
8.181 - 8.179 in.	8.175 - 8.173 in.
8.131 - 8.129 in.	8.125 - 8.123 in.

CONNECTING ROD BEARING AND BUSHING LUBRICATION

Oil is led from one of the adjacent main bearings through a tube swaged in the crankshaft to the crankpin bearing. A radially drilled hole in the upper shell half and a communicating rifle drilled passage in the connecting rod conduct oil from the crankpin to the piston pin bushing. These passages receive a generous supply of oil from a groove machined in the bearing surface of the upper shell half which extends circumferentially about 45 degrees on each side of the radially drilled hole.

The piston pin bushing is provided with annular grooves which are machined in the longitudinal center of the inner and outer diameters. Four equally spaced holes, communicating between these grooves, provide passage of the oil from the outer groove to the inner one, from which the oil flows through the clearance space between the pin and bushing, thus lubricating the parts.

Radially drilled holes in the pin conduct oil to the annular reservoir between the inner wall of the pin and the piston pin cups that are rolled in the pin ends. This reservoir aids in the lubrication of the bushing and piston pin.

PISTON PIN BUSHING INSTALLATION

The piston pin bushings furnished as spares may be installed as replacement in any of the rods as they are completely interchangeable. However, when a bushing is installed as a replacement it is recommended that the piston pin be used as a spotting mandrel for checking the bore in the bushing. Thickness gauges should also be used for checking the oil clearance between the pin and the bushing which should be from .0035 to .005 inches.

The old bushings may be removed from the connecting rod by means of an arbor press or a screw jack. The replacement may be installed in the rod by the same means.

INSTALLATION OF CONNECTING ROD

Refer to "Piston Installation".

CYLINDER LINER

Cylinder liners, Fig. 35-1, fit in the cylinder block with a metal to metal fit. Each liner has a collar on its upper end which is fitted to a counterbore in the cylinder block. Three synthetic rubber seal rings in grooves near the lower end of each unit seal the fit between the liner and the cylinder block. The upper rims are grooved to receive the mating projections of the cylinder head in male and female, metal to metal joints which prevent the escape of gases from the cylinder.

CYLINDER LINER REMOVAL

A cylinder liner removal tool consisting of an upper and lower bar, sleeve and stud is used to draw the liner from the block. However, due to the fact that the liner fits are metal to metal, it is sometimes necessary to break the fit loose by jacking from the bottom. Place a piece of rail across the base door openings and set a jack on the rail. Place the lower bar on the jack and raise the jack until the bar is in position against the bottom of the liner. Jack until the liner is free in the lower fit. Remove the bar, jack and rail, apply the liner removal tool and lift the liner out.

CYLINDER LINER MAINTENANCE

Cylinder Liner Wear Limits

Cylinder liner wear is measured by taking a micrometer measurement of the liner bore in a plane perpendicular to the crankshaft and in a plane parallel to the crankshaft 1/4" below the upper end

of the piston ring travel. Carefully clean Carbon deposits before taking micrometer readings. If any of the measurements exceed the limits below, the liner should be scrapped.

	Max.
1. Out of circularity with liner in engine frame. - - - - - - - - - - - - -	.005
2. Recommended maximum diameter wear at top piston ring travel - - - -	.080
Liners must be removed for rehoning when the bore reaches 12.545. Such rehoned liners may be continued in service until the bore reaches 12.580 when the liner must be scrapped.	
3. If a new liner and piston are installed with close skirt clearance of .021 or less, the out of circularity with the liner should not be in excess of - - - - - - - - - - - -	.033

CYLINDER LINER INSTALLATION

Before installing a liner, first clean off the roughness on the lower liner fit in the cylinder block to prevent possible tearing and rolling of the liner seal rings as they enter this fit and apply liquid soap. Apply liner seal rings; soap the rings and fit and lower the liner into the cylinder bore. As the liner seal rings enter the lower fit, pressure will have to be applied to force the liner down. To do this, either reverse the liner puller tool or pry the liner down using blocks and a pry bar.

CRANKSHAFT

The carbon steel, forged crankshaft has highly machined and polished surfaces of the main and crankpin journals and is drilled to provide a continuous flow of oil to the connecting rod and main bearings, Fig. 50-1.

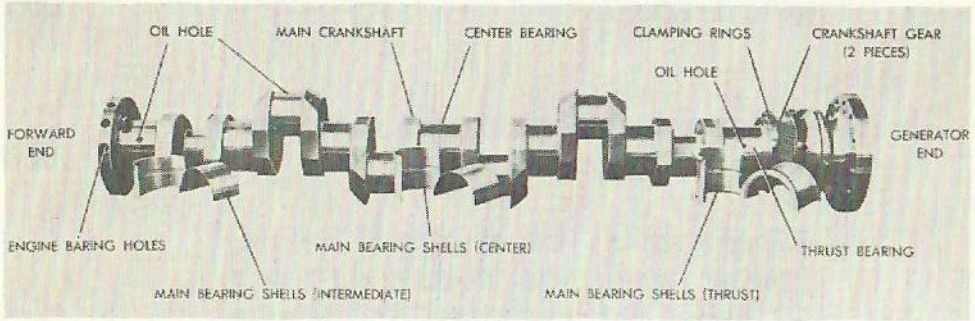

FIG. 50-1
CRANKSHAFT

CRANKSHAFT REMOVAL

1. Disassemble engine down to the point where the crankshaft can be safely lifted out.

2. Remove all seven (7) crankshaft bearing shells and caps. Roll No. 7 main thrust bearing shell (lower half) out to prevent crushing thrust edge of bearing.

3. Using a clean rope looped through No. 2 and No. 5 crank journals, lift crankshaft.

4. Set crankshaft in a clean, well protected spot with suirable blocking under at least 4 points, (1, 3, 5, 7 main journals)

5. Wrap all journals with a suitable protective material after greasing them.

CRANKSHAFT MAINTENANCE

1. Clean the main journals and crankpins with paint thinner and rags.

2. Clean lubricating oil passages.

3. Inspect wearing surfaces and fillets for fractures. Magnaflux the crankshaft if the necessary equipment is available.

4. Inspect bearing surfaces for burrs which can be removed by stoning and the use of crocus cloth.

5. Measure main journals and crankpins for wear. Refer to index for undersize main bearings and journals.

Main Journal Diameter - New	9.500 - 9.498
Crankpin Diameter - New	8.250 - 8.248
Limit for out of round wear	.003
Limit for Journal Taper	.0005

To check for wear, first measure the center of the journals at two points 90 degrees apart. This will be the original diameter of the journal because there is no wear in the path of the bearing oil groove. Next measure the journals at two points 90 degrees apart at a spot at least one inch to the side of the journal center. This measurement is wear.

6. Check the crankshaft for straightness. Place the crankshaft on "V" blocks, supporting it on No. 2 and No. 6 main journal. Place a dial indicator with its point against the SIDE of the center of the No. 4 main bearing journal. Set the dial indicator at zero and rotate the shaft slowly.

CRANKSHAFT INSTALLATION

1. Check the bearing saddle bore by placing a straight edge along the bottom of the seven saddles.

2. Check the wall thickness of the main bearings. The total wall thickness of new bearings is .2455 - .2465.

3. If the crankshaft is straight, the bearing saddles in alignment and the bearing thickness correct, the crankshaft may be installed without making any further checks.

   a. Install all lower main bearing shells, except No. 7.

   b. Place crankshaft in base.

   c. Roll in No. 7 main bearing shell (thrust).

   d. Apply upper shells in caps and apply and tighten all caps.

   e. Check thrust clearance and install all cotter pins.

4. Apply cylinder block to base.

5. Install and tighten all oil lines.

CRANKSHAFT GEAR

The crankshaft gear, made in halves, is accurately fitted to the crankshaft. It is held in place by two clamp rings each of which is fitted with two ream bolts. This gear is mated with the idler gear.

CRANKSHAFT GEAR REMOVAL

1. Remove the oil catcher casing from the generator end of the main base. Also remove the main base doors at No. 6 crank. These open-

ings provide additional access to the crankshaft gear.

2. After taking precautions against damage to the gear teeth, remove the clamp bolts and the gear clamp rings.

3. Carefully remove the gear halves. It may be necessary to tap the keyed half free. Use a block of wood or lead maul.

CRANKSHAFT GEAR MAINTENANCE

Inspect the crankshaft gear for pitting, broken or chipped teeth and excessive wear. If Magnaflux equipment is available, examine gear by this method for cracks and surface flaws. Inspect key and keyway.

CRANKSHAFT GEAR INSTALLATION

Install the crankshaft gear with a butt clearance of .0015 inches at the leading joint of the unkeyed half. No clearance should be allowed at the opposite joint. The clamp ring bolts should be installed with a one man pull on a fifteen inch wrench. Apply cotter pins.

CRANKSHAFT GEAR TIMING

The double timing marks on the crankshaft gear should mesh with the single timing mark on the idler gear.

CRANKSHAFT THRUST

To check crankshaft thrust, first pry the crankshaft toward the generator end and then toward the free end. Use a pinch bar between any of the main bearing caps other than the thrust bearing (nearest the generator) and crank web. Check the clearance between the face of the thrust bearing and the shoulder of the crank web. Never pry against the thrust bearing cap as the bearing face may become damaged which will result in a bearing failure.

MAIN BEARINGS

The main bearings are steel or bronze backed shells in halves of ample thickness to prevent distortion, with a well-bonded lining. The bearings are precision made and are fitted without shims. Each bearing is made up of upper and lower shells which are held in the saddle of the main base member of the crankcase by a forged steel bearing cap. These main bearings are seven (7) in number, one of which is a lateral thrust (end) bearing (No. 7), one of which is a main center bearing (No. 4) and the other 5 are standard or intermediate, Fig. 50-1.

MAIN BEARING REMOVAL

The upper main bearing shells can be removed after removing the bearing caps. The lower main bearing shells can be removed by inserting the main bearing shell removing tool in the crankshaft oil hole and rotating the crankshaft clockwise (when viewed from the generator end) which will cause the tool to push or roll the lower main bearing shell out.

MAIN BEARING MAINTENANCE

Upper and lower shells are interchangeable. Bearing shells should be carefully examined for shelling, pitting, wear and looseness in the bearing cap. If wear and pitting has progressed to any great extent the shells should be renewed. Bearing caps are line bored and are not interchangeable. If a complete set of shells is applied the shaft must be resting uniformly on all bearings. Therefore, whenever the main bearing clearances become excessive, new bearing shells should be installed.

When the crankshaft main journals become worn to the point where standard shells would provide excessive clearance due to scoring or other defects the journal can be ground to take a standard undersize bearing.

If old bearings are to be reapplied, check the spread of each half shell by fitting it to the contour of the main bearing bore if the crankshaft has been removed. This should be a snug fit with no clearance between shell and the bore. If there is any indication that the back of the bearing does not conform exactly with the journal bore, the bearing should not be used. Examine the bearing shells for nicks and burrs on the back and inner surfaces of the bearing.

If a new bearing is to be installed, stamp the new shell with the same figures and in the same location as on the old shell. Since bearing shells are interchangeable when new, with the exception of the thrust bearing, identification marks are stamped on all shells to determine their proper location. A new bearing shell may be installed with an old half shell provided the old remains in its original position. Once shells have established their bearing surfaces, do not mix them up.

UNDERSIZE MAIN BEARINGS

Standard undersize bearings can be furnished having bores shown in the table below. We recommend that worn crankshaft journals be furnished machined to the dimensions shown for any one of the standard undersize bearings:

Bearing Bore	Crankshaft Journal Diameter
9.487 - 9.500	9.490 - 9.488
9.467 - 9.470	9.460 - 9.458
9.422 - 9.425	9.415 - 9.413
9.382 - 9.385	9.375 - 9.373

MAIN BEARING INSTALLATION

When replacing main bearing caps make sure that the groove on the insde bore of the cap is diagonally opposite to a similar groove to be found on the main bearing saddle.

The main bearing shells are anchored in their respective caps and saddles by a tongue which is pressed out of the bearing shell into a dovetail or groove and this prevents either upper or lower shell from turning around the crankshaft which would result in cutting off the oil hole and oil supply to the main and connecting rod bearings. The lower main bearing shells can be installed by inserting the main bearing removal tool in the crankshaft oil hole and rotating the crankshaft counterclockwise when viewed from the generator end) which will cause the tool to push or roll the lower main bearing shell in.

Tighten the main bearing nuts with the offset wrench and extension handle until the cotter pin holes line up with the nuts extremely tight; or tighten nuts to 1800 ft. lbs. torque.

MAIN BEARING BREAK-IN

Inspect the bearings for excessive temperature after running the engine for two minutes, five minutes and twenty minutes.

WATER PUMP

The water pump, Fig. 51-1, is located on the fuel pump side of the engine where it is fastened to the block near number six cylinder. It is gear driven off the fuel pump camshaft gear, has a rustless steel shaft and uses a closed, centrifugal impeller. The shaft is supported by a single row ball bearing at the gear end and a water lubricated bushing at the impeller end. Consequently, a small amount of water should always drip from the water pump packing and run off through the drain pipe. Several drops per minute should leak past the packing. The drain must be kept open or the water level will rise high enough in the casing to work past the ball bearing into the gear casing and cause crankcase dilution.

WATER PUMP REMOVAL

To remove the entire water pump assembly, first remove any drain lines, and on the 1000 HP engines, piping that runs to the turbocharger. Remove the side cover and the spring loaded safety cover from the gear case on the 660 HP engine; the safety cover and crankcase breather from the gear case on the 1000 HP engine.

Support the pump with ropes and remove the capscrews and lockwashers from the suction head to the block; capscrews, lockwashers and dowels from the discharge casing and foot casing to the block. These dowels are covered with a plug which must be removed before the dowels can be removed.

Also remove the dowel studs by tightening the nut on the dowel stud, capscrews and lockwashers holding the casing to the gear casing.

Slide the pump forward until the drive gear clears the gear casing and remove from the engine.

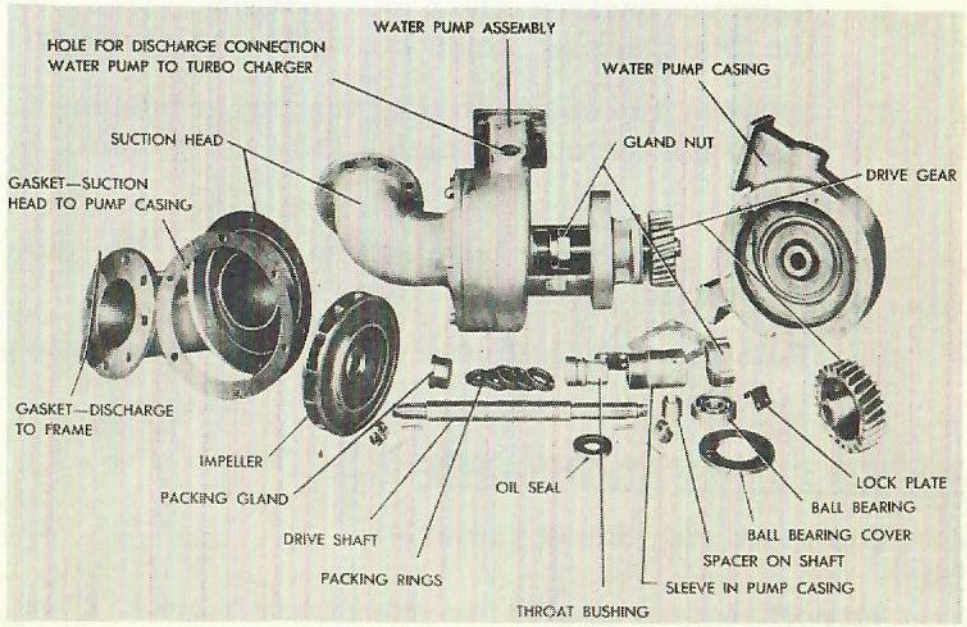

FIG. 51-1
WATER PUMP

WATER PUMP DISASSEMBLY

1. Remove cap nuts and gaskets from the suction head casing and remove the suction head.

2. Remove the cotter pin, nut and impeller. To remove the impeller, first loosen the packing gland nut locking plate and packing gland nut. Then remove the ball bearing cover capscrews and cover. Using a soft hammer, drive against the end of the shaft to loosen the impeller. Remove key from the shaft.

3. Remove cotter pin and nut from gear end of shaft. Press off gear, remove key from keyway and then press off the ball bearing. Use the inner ball bearing race to support the load otherwise the ball bearing may be permanently damaged.

4. Slide the ball bearing spacer off the shaft.

5. Remove oil seal.

6. Remove packing gland nut, packing gland and the five packing rings from the casing sleeve.

7. Remove the dowel holding the throat bushing in place and the dowel holding the casing sleeve in place.

8. Press the throat bushing out toward the gear end of the casing.

9. Pull the casing sleeve out of the water pump casing.

WATER PUMP MAINTENANCE

Clean off old gasket material.

Inspect suction header for erosion and cracks. Check impeller for radial cracks and signs of rubbing on the casing. See that the shaft is not scored where it runs in

the water lubricated throat bushing or is cut by the packing. Ball bearings must have no roughness when turned by hand and yet both races should fit snugly over the balls.

Check gear for pitting and general wear or for any cracks that may have developed.

Replace all parts that are doubtful and thoroughly clean all parts that are to be reused.

WATER PUMP REASSEMBLY

1. Install casing sleeve with a .000 - .0015 inch press fit.

2. Press throat bushing into casing.

3. Slide oil seal onto shaft.

4. Slide spacer onto shaft.

5. Press the ball bearing on the shaft until it is tight against the spacer. The ball bearing has a .000 - .001 press fit. During this operation make certain that the inner race of the bearing is supporting the force.

6. Slide this assembly into the casing and place the packing gland nut and packing gland on the shaft before the shaft enters the casing sleeve. The outer ball bearing race should be a light tap fit in the casing.

7. Check the shaft for running clearance in the throat bushing. This should be .002 - .0035 inches. Condemning limit is .005 inches. If the clearance is too small remove the assembly and ream out with a standard size reamer.

8. Apply the five packing rings. Start the gland and gland nut on the casing sleeve.

9. Slide ball bearing cover over shaft.

10. Apply key to keyway and press gear onto shaft. Make sure that the gear hub is bearing against the inner ball bearing race.

11. Apply and tighten shaft nut. Apply cotter pin.

12. Tighten ball bearing cover capscrews and wire them together.

13. Make sure that the shoulder of the shaft at the impeller end extends about 1/16 inch beyond the pump casing.

14. Apply key to keyway. Press impeller on shaft with a .0005 - .002 inch press fit, apply nut, tighten securely and insert cotter pin.

15. The radial clearance between the outside diameter of the impeller and casing should be .003 - .0055 inches. The condemning clearance is .094 inches.

16. Apply gasket to casing and fasten suction header to it with gaskets and cap nuts.

17. Turn shaft by hand to make sure that all parts are free.

18. Tighten packing gland nut sufficiently to compress the packing rings and then back the nut off about one-half turn.

WATER PUMP INSTALLATION

Apply all new gaskets.

If the suction header, water pump casing or drive gear have not been replaced, the dowel pins should provide for correct alignment of the drive gear with the

camshaft gear when checked with a dial indicator or feeler gauge. The backlash should be .004 - .007 inches, after blocking the camshaft gear. If improper clearance is found, remove the dowel pins and shift the assembly until the proper clearance is obtained. Redowel.

After the pump has been run for a short time, check for leaks at gaskets, excessive water dripping from the packing gland nut, bearings overheating and drive gear noises.

LUBRICATING OIL PUMP AND DRIVE

The lubricating oil pump and drive, Fig. 52-1, are two separate units which are bolted together before installation on the base end cover at the free end of the engine. If these parts were more accessible, each part could be applied separately. However, it has been found from experience, that to service either part, it is advisable to remove the entire assembly.

REMOVAL OF PUMP AND DRIVE

First remove all piping and tubing from the assembly. Remove all V-belt guards. Loosen traction motor blower, release idler pulley tension adjuster for the radiator fan drive and remove belts from the engine. Remove the large drive pulley from the front of the lubricating oil pump drive.

Remove dowel pins, nuts and lockwashers from the lubricating oil pump upper casing flange to the base end cover. Also remove nuts and lockwashers from the lubricating oil pump to base end cover.

Remove top cover from the lubricating oil pump drive casing, clip the wire locking the internal capscrews together, remove the capscrews and remove the assembly from the engine.

Remove the spacer between the pump and the end cover.

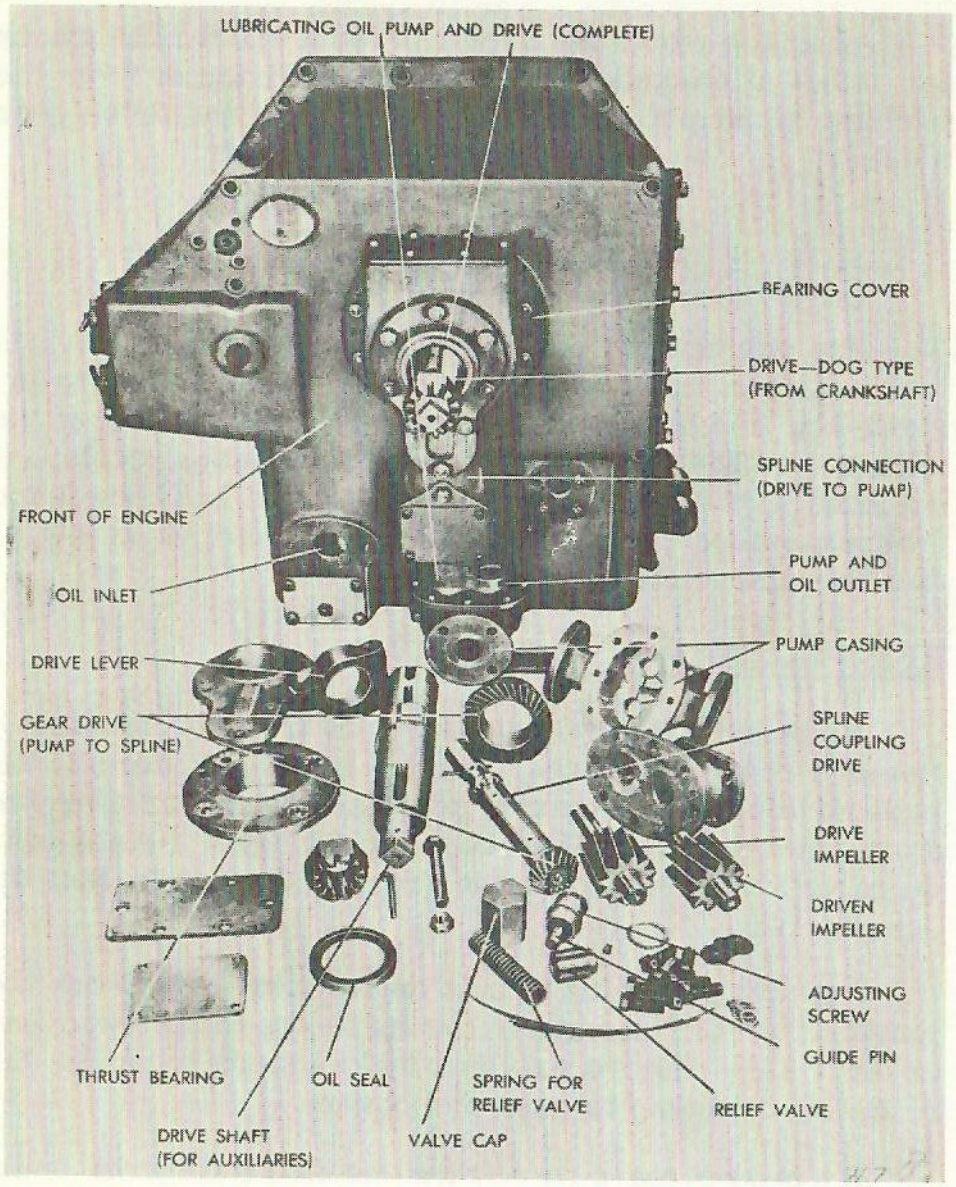

FIG. 52-1
LUBRICATING OIL PUMP AND DRIVE

DISASSEMBLY OF PUMP AND DRIVE

With the unit on a bench, proceed with disassembly as follows:

1. Take off lower end casing cover by removing the capscrews holding it to the drive casing.
2. Remove cotter pin from the spline coupling and tap the coupling down.
3. Remove tapered dowel pins and capscrews which hold the lubricating oil pump drive casing to the lubricating oil pump cover.
4. Tap pump cover from drive casing with a soft hammer.
5. Remove cotter pin, slotted nut and bolt from the drive lever by driving a wedge in the slot and tapping the drive lever off with a soft hammer.
6. Remove drive lever key and dowel pin.
7. Remove key for the fan drive sheave from the tapered section of the drive shaft.
8. Remove the binding wire and the capscrews which hold the thrust bearing to the pump casing.
9. Take drive shaft out of casing by tapping against the tapered end with a soft hammer.
10. Slide thrust bearing from shaft.
11. Press bevel gear from the shaft and remove key. Note that the hub of the gear acts as one of the journals for the drive shaft.
12. Remove capscrews and washers holding the cover which contains the oil seal and bushing to the lubricating oil pump drive casing. Remove the cover by tapping with a soft hammer from inside of the drive casing.

13. Remove oil seal and bushing from cover.

14. Remove nut from vertical shaft using a spanner wrench. Take off lockwasher and thrust washer.

15. Pull vertical shaft and bevel gear (which is part of the vertical shaft) out through the top of the drive casing.

16. Remove lockpin and lockwasher from the drive casing. Press vertical shaft bearing out through the top of the casing.

17. Cut the binding wire holding the capscrew heads and remove the capscrews and gaskets under the capscrew heads which hold the lubricating oil pump drive casing to the lubricating oil pump cover. Remove the cover and lift out the drive gear and driven gear from the pump casing.

18. Remove valve cap from lubricating oil pump relief valve.

19. Screw out the adjusting screw with guide pin and remove the spring and valve.

20. The expansion plugs in the pump cover and the pump casing may be driven out but this is not necessary.

21. Remove the cotter pins, slotted nuts and the two ream bolts and four machine bolts which hold the lubricating oil pump drive flange to the crankshaft and remove the flange.

22. Remove the cotter pins and slotted nuts which hold the lubricating oil pump drive shaft lever buttons and drive out the buttons and shims.

MAINTENANCE OF PUMP AND DRIVE

The above procedure is for complete rebuilding of the pump and drive. Should only the pump gears need service, it will not be necessary to dismantle the pump drive. Service only those parts requiring attention.

Gears should be checked for fatigue failures, broken or chipped teeth, pitting and wear. Clearances between teeth and bearing surfaces are best checked when the unit is assembled. Any condition which does not conform with specifications warrants replacement of necessary parts. Shafts and bushings must be checked for scoring and wear. Bearing surfaces for shafts should not be more than .001 inch out of round. Thrust surfaces should not be grooved. Generally, grooving will occur on bushing surfaces and not on thrust surfaces of the gear. See that oil seals show little or no signs of wear and replace all gaskets. Replace any items that are questionable.

Oil pump gears must not have more than .007 inch end play. Clearance greater than this will result in oil pressure drop and gears should be replaced if this condition exists. The best method for checking this dimension is with a micrometer depth gauge or straight edge and feelers.

However, excessive end play may also be due to wear on the casing in which case the casing should be replaced. The running clearance of pump gear journals in the pump casing is .002 - .0035 inches.

After the relief valve has been dismantled, clean all parts thoroughly. Check spring for broken coils and also for wear from rubbing against the valve.

All oil passages in casings, shafts, bushings, etc. should be blown out and free from dirt.

ASSEMBLY OF PUMP AND DRIVE

Pump

1. Drive expansion plugs into pump casing and pump cover.

2. Drop both oil pump gears into place in the pump casing. Gear backlash should be .003 - .005 inches. Check with narrow feelers or a dial indicator. The gear journals should be a .002 - .0035 inch fit in the pump casing and pump cover.

3. Apply pump cover and tighten down capscrews. Check upper journal of driven gear for alignment and running clearance by turning spline on drive gear by hand. Check end clearance of gears. This should be .003 - .007 inches.

Relief Valve

1. Drop valve into relief valve casing. Clearance is .004 - .006 inches. Condemning clearance between the valve and casing is .012 inches.

2. Place spring on guide pin, apply copper gasket to the underside of the shoulder and screw the adjusting nut down until the shoulder is tight against the gasket.

3. Apply valve cap.

Pump Drive

1. Press the vertical shaft bearing into place in the lubricating oil pump drive casing. This is a metal to metal fit. Be sure that the shoulder of the bearing is tight against the casing. Screw lockpin in place.

2. Drop vertical shaft into bearing. Check for smoothness by turning the shaft by hand. Check

running clearance which should be .0035 - .0055 inches. Ream out bearing if the bearing is rough or the clearance too small. There is no adjustment for vertical height of the gear. It is set by the dimensions on the vertical shaft and bearing, both of which are held to close tolerances. The shoulder of the shaft at its lower end should extend .006 - .010 inches beyond the vertical bearing. This is the thrust or end clearance.

3. Apply thrust washer, lockwasher and tighten spanner nut.

4. Press drive shaft bushing into front cover and attach assembly to the lubricating oil pump casing. Do not tighten the capscrews. The bushing is a .001 - .003 inch press fit in the front cover.

5. Press bevel gear onto shaft. This is a .001 - .003 press fit. Be sure the gear is tight against the shoulder of the shaft.

6. Slide the thrust bearing over the gear hub and push the assembly into the drive casing. Do not damage the front bushing during this operation. The radial clearance between the gear hub and the thrust bearing is .005 - .007 inches.

7. Apply and tighten thrust bearing to casing capscrews and front cover capscrews.

8. Check drive shaft thrust which should be .004 - .006 inches. Check gears for .003 - .006 inch backlash. If these clearances are incorrect, remove the capscrews and pull the thrust bearing from the drive casing. Add or remove shims from the thrust bearing flange, whichever is necessary. Reinstall the thrust bearing, recheck clearances and repeat procedure until proper clearances are obtained.

9. Drive oil seal into front cover.

10. Tap key into keyway of tapered section of drive shaft.

11. Tap key for drive lever into place, apply dowel, install drive lever and fasten securely in place with the clamping bolt.

Connecting Pump to Drive

1. Attach the pump cover to the pump casing with the capscrews and position them with the dowel pins. Apply a new gasket.

2. Slip spline coupling over spline of vertical shaft making sure that it slides easily. Apply cotter pin.

3. Tighten pump to drive casing capscrews.

4. Apply new gasket and lower end casing cover.

INSTALLATION OF PUMP AND DRIVE

1. Place oil pump and drive assembly on engine and fasten in place against end casing and with the drive lever between the drive buttons, check for .005 - .010 inch clearance between the drive lever and buttons. This clearance may be adjusted by adding or removing shims under the buttons.

2. After the proper drive lever clearance has been obtained, loosen the assembly and insert the spacer with new gaskets between the pump casing and the end casing and apply capscrews.

3. Tighten all capscrews securely and wire together the three capscrews inside the drive casing.

4. Apply gasket and cover to the top of the drive casing and fasten with the capscrews.

TURBOCHARGER

The turbocharger should be removed and dismantled every two years for inspection and cleaning.

TURBOCHARGER REMOVAL

1. Remove hatch from roof of hood that covers the turbocharger.

2. Remove exhaust stack, air filter and sheet metal duct work.

3. Disconnect all piping, air and exhaust manifolds.

4. Loosen turbocharger mounting bolts and attach a rope or cable sling.

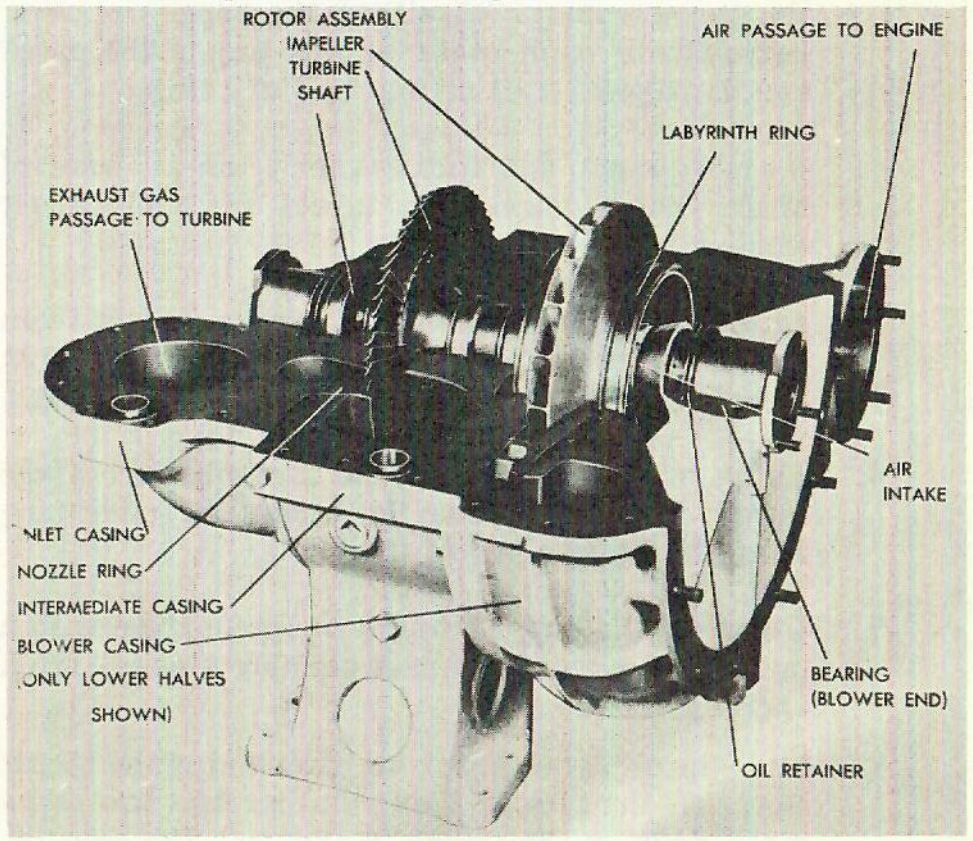

FIG. 53-1
TURBOCHARGER

5. Lift turbocharger enough to take its weight from the platform, remove the mounting bolts and then lift out the turbocharger and set it on the floor or a bench.

TURBOCHARGER DISASSEMBLY

1. Remove air filter adapter.

2. Remove bearing end covers, Fig. 53-1. Note that the turbine end cover has a long stem attached to it. This stem must not be bent or damaged in any way.

3. Remove all bolts and capscrews holding the upper inlet, intermediate and blower casings to the lower inlet, intermediate and blower casings. Do not remove or loosen any bolts connecting the three casings of either the upper or lower halves with each other unless any of the parts are damaged. Lift off top half of casing.

4. Remove nut and lockwasher from air side of shaft; nut, lockwasher, dowel pin and thrust washer from exhaust side.

5. Lift shaft assembly enough to take weight from the bearings and slide them off the shaft. Let the shaft assembly rest on the labyrinth rings.

6. Using a rope sling, lift the assembly from the lower casing, remove the large labyrinth ring from the blower end of the shaft.

7. Utilizing the tapped holes in conjunction with a puller, remove the thrust bearing sleeves from each end of the shaft.

8. Slide the oil retainers from each end of the shaft. Note that the blower side retainer has two labyrinth rings on the inside periphery; the exhaust side retainer has one labyrinth ring and a felt gasket around the outside.

9. Slide the small labyrinth ring from the end of the shaft.

10. Remove nut and lockwasher holding blower impeller to shaft and tap impeller from the shaft. Remove key from shaft.

11. Slide the two small and one large labyrinth rings from the shaft.

12. Note that the aluminum impeller has a steel hub which is pinned in position. Do not attempt to remove it. Any damage to either the impeller or to the steel hub necessitates unit replacement.

13. To remove diffuser halves from the casing, remove the long capscrews from the air intake side of the casing and lift out each half.

14. To remove the nozzle ring halves, remove the four special capscrews (two for each half) located on opposite sides of each casing half near the joint, and drive them out with a soft hammer.

15. Note that the capscrews holding the nozzle ring in position have a ream fit in the casing and that the ends are dowels which fit in the nozzle ring.

TURBOCHARGER MAINTENANCE

Thoroughly clean the shaft, turbine blades and air impeller by hand. The casings may be cleaned by other means.

Check both the turbine wheel and the air impeller for cracks and for any signs of contact with the casing, nozzle or diffuser rings. The turbine blades must not be loose or show signs of loosening in the diaphragm. The blades should be examined for signs of excessive heat, burning and loosening of the wire connecting them,

The two bearings should be examined for wear, overheating and scoring. This also applies to the journals. Be sure that all sealing rings, both air and oil, are in good condition and have not been riding on any of the rotating parts. Any of these conditions must be corrected and clearances must be conformed with.

Remove all neoprene rings at the water passages and clean the water connection ferrules.

See that all air, oil and water passages are clean and free of foreign material.

In the event it is necessary to replace the air impeller or any of the turbine blades, the entire turbocharger should be returned to the manufacturer for reconditioning.

TURBOCHARGER REASSEMBLY

1. Set lower casing half on a bench, floor or convenient stand.

2. Drive nozzle ring in place. If a new ring is being installed, do not drill new dowel holes or apply the special capscrews at this time.

3. Apply diffuser ring and turn capscrews down snugly but do not tighten.

4. Slide two small and one large labyrinth rings on shaft. Teeth of the small rings must point towards the exhaust end of shaft and teeth of the large ring toward the air end of shaft.

5. Apply key, coat shaft with white lead and tap impeller into position. The impeller should slide on easily, otherwise it will be distorted.

6. Apply lock ring and nut and tighten securely.

7. Slide the small diameter labyrinth ring on the exhaust end of the shaft with the teeth pointed out.

8. Slide the two oil retainers and the thrust bearing sleeves over each end of the shaft. Be sure that the dowels in the face of the bearing sleeves line up and fit properly in the reamed holes in the shoulder of the shaft.

9. Before dropping the shaft assembly into the lower casing, check all bearing and labyrinth clearances. Check these as follows:

   a. Thrust bearing sleeve to thrust bearing .006 - .008 inches on diameter and .008 - .012 inches thrust.

   b. Large labyrinth rings .018 - .023 inches radial.

   c. Small labyrinth rings .013 - .016 inches radial.

   d. Labyrinth rings inside of oil retainers have .004 - .006 inches radial.

10. Both oil retainers have a dowel which fits into the lower casing and positions them. Do not fail to install the felt gasket around the periphery of the turbine end retainer.

11. Drop the shaft assembly into the lower half casing. See that the labyrinth rings fit properly in their respective positions in the casing.

12. Lift each end of the shaft slightly and slide the bearings into position.

13. Apply thrust washer, lockwasher and nut at the turbine end; lockwasher, nut at blower end. Tighten securely.

14. Check turbine blade tip clearance which should be .050 - .062 inches.

15. Apply a sealing compound to the entire joint of the lower casing. Drop upper casing into place being careful not to damage any parts. All labyrinth rings must fit properly into the upper casing.

16. Apply bolts, lockwashers and nuts and tighten assembly securely.

17. Fasten the nozzle ring with the four special ream bolts. If a new ring was installed, drill dowel holes first.

18. Tighten diffuser ring capscrews securely at this point and wire them together.

19. Apply the bearing end covers and gaskets. Again check the long stem on turbine end cover for straightness. It must not rub inside turbine shaft.

20. Apply air filter adapter.

TURBOCHARGER INSTALLATION

Lower the turbocharger through the hatch in the locomotive hood and set it on the mounting platform. Line turbocharger up with the air and exhaust manifolds and shim as necessary. Connect the manifolds, all piping, air filter and all dust work. Replace the hatch.

FUEL INJECTION PUMP AND GOVERNOR DRIVE

The fuel injection pump and governor drive assembly, Fig. 54-1, mounted on the fuel pump side of the cylinder block, is composed of a number of sub-assemblies by means of which the engine is controlled. The drive shaft assembly of the unit is geared to the crankshaft, through the main gear train, at a speed reduction of 2-1.

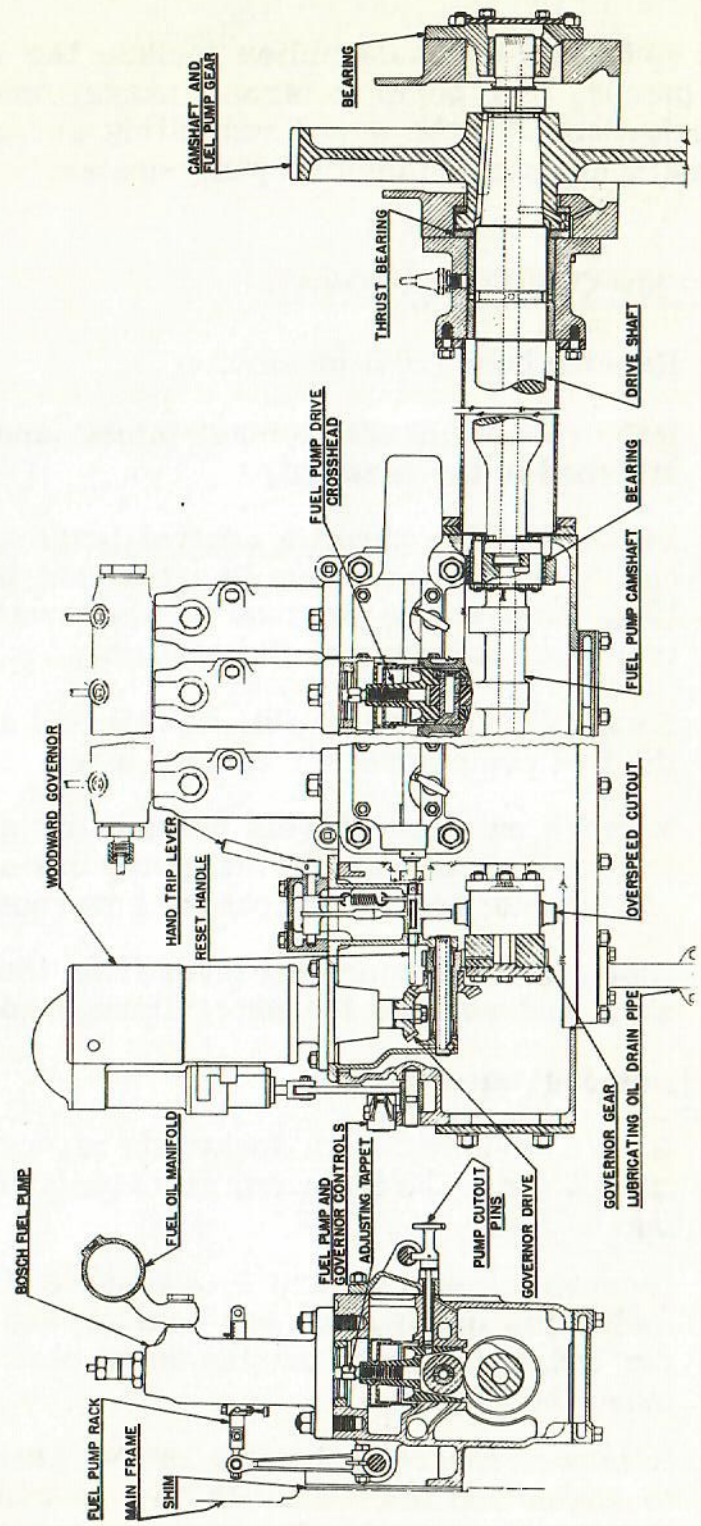

FIG. 54-1
FUEL PUMP AND GOVERNOR DRIVE

The principal sub-assemblies include the fuel injection pumps, fuel pump control linkage, emergency stop mechanism and the speed regulating governor all of which are mounted on the fuel pump casing.

FUEL PUMP CASING REMOVAL

1. Remove hood from locomotive.
2. Remove all linkage, tubing, piping and wiring attached to the assembly.
3. Disconnect the throttle control lever from the cab connection and from the governor ball stud link. Loosen the bracket for the throttle control lever and remove the assembly.
4. Remove the cotter pin, washer and pin from the fuel pump governor control lever.
5. Remove nuts and dowels holding the governor and governor drive to the fuel pump casing. Lift off governor and then lift out the governor drive.
6. Disconnect the operating lever from the control shaft and remove the short linkage assembly.
7. Remove water pump.
8. Remove capscrews, lockwashers, cover and gasket from the fuel pump drive shaft end bearing.
9. Remove capscrews and lockwashers from the fuel pump drive shaft end bearing and remove the bearing. Drive out the dowel pins and remove the gasket.
10. Remove capscrews holding upper gear casing to engine and lift it off with the eye-bolt. Note that the upper half of the capscrews holding the fuel pump drive shaft bearing to the upper gear casing must also be removed.

11. Remove end cover plate, drain fitting and bottom cover plate from the fuel pump drive casing.
12. Lift out inner and outer upper thrust collar halves.
13. Remove cotter pin and large slotted nut from end of shaft.
14. Set all cutout pins in cutout position and bar engine over until all pumps are cut out.
15. Jar shaft from gear by striking end of shaft with a soft hammer.
16. Pull camshaft and drive shaft out of casing toward the Free End of the engine.
17. Remove the capscrews and lockwashers from the fuel pump drive shaft casing and lift the casing from the engine. Remove the packing flange, packing and gasket from the casing.
18. Lift out the gear and remove the gear key from the shaft.
19. Remove remaining or lower half of capscrews holding the fuel pump drive shaft bearing to the lower gear casing. Tap bearing from its position and remove dowel pin. Remove gasket. Remove restricted lubricating oil fitting.
20. Remove inner and outer lower halves of thrust collar.
21. Put rope sling around the fuel pump drive casing, remove plug for dowel pin and remove dowel pin. Remove casing nuts and lockwashers and slide casing off the cylinder block studs.
22. Remove casing shims from the cylinder block studs.

FUEL PUMP CASING DISASSEMBLY

To Remove Pump Cutout Shaft and Cover

1. Remove return spring and spring seat at end of shaft.
2. Remove dowel pin and collar at reset handle end of shaft.
3. Pull out dowel pins, remove nuts and lockwashers from cutout cover and pull cover from casing. Remove gasket.
4. Turn control knobs to clear the cutout rack and slide the cutout rack out of the cover.
5. Remove and inspect the key for the cutout rack.
6. Drive out dowel pins fastening cutout knobs to lockpins, remove knobs and pull out lockpins and springs.

To Remove Control Shaft

1. Remove adjusting screw pins connecting the fuel pump levers to the fuel pump racks.
2. Remove or drill out pins locking fuel pump levers to control shaft. Loosen clamping bolts.
3. Drill out dowel pins holding the two collars to the control shaft at each side of the bearing boss nearest the governor.
4. Remove taper pin and loosen clamping bolt holding operating lever to control shaft.
5. Drive the control shaft from the casing.
6. Tap out the control shaft needle bearings that are located in the four bosses.
7. Loosen and remove locknut for the adjusting screw, remove adjusting screw. Remove trunnion pin.

To Remove Fuel Pumps and Crossheads

1. Remove fuel oil inlet manifold retaining screws and pull manifold from the fuel pumps. Take care of the gaskets.
2. Remove nuts and washers from fuel pump base and lift them from the casing.
3. Lift out the fuel pump crossheads.
4. The crossheads consist of the crosshead body, roller pin, roller, adjusting screw, locknut for adjusting screw, and oil shields. The assembly is readily disassembled.

To Remove Camshaft Bearings

Drive fuel pump camshaft bearings out of casing.

To Separate Fuel Pump Camshaft from Drive Shaft

Remove lockwire and slotted nuts from the bolts holding the camshaft to the drive shaft. Drive out the camshaft bolts. Note that one bolt hole is off center which makes it mpossible to reassemble the two shafts in a wrong manner.

INSPECTION AND MAINTENANCE

All parts should be inspected for wear, distortion, damage, broken parts, fatigue failure, etc. Friction bearings should not be scored or burned. Roller bearings should not be rough. All moving parts should be checked for clearances.

FUEL PUMP CASING REASSEMBLY

1. Drive the camshaft bearings into the casing and position them.

2. Scrape fit the bearings to an arbor with the exact diameter of the camshaft journals and of sufficient length to cover all three bearings at the same time. Clearance with the arbor resting on the bottom of the bearings should be .003 inches at the top and .0015 inches at the sides.

3. Drive the oil seals into place.

4. Assemble the crossheads. The roller to roller pin clearance should be .0015 - .003 inches.

5. Slide the camshaft into position.

6. Drop the crossheads into place in the casing. If the same crossheads are being used, install them in the position the marking indicates.

7. Clearance of crosshead in casing is .002 - .0045 inches. The brass key in the crosshead must slide freely in the casing keyway.

8. Assemble cutout pins, springs and knobs in the cutout cover and dowel the knobs in place.

9. Fasten cutout cover to casing with lockwashers and nuts. Be sure taper pins fit properly.

10. Check each cutout pin for fit in tapered hole of each crosshead. If the pins do not slide freely into the crossheads, the pins will have to be ground until they do.

11. Slide cutout shaft into cutout cover bosses. Apply collars and dowel in place. Be sure the shaft slides freely.

12. Apply cutout shaft spring seat and spring.

13. Drive needle bearings for control shaft into drive casing bosses.

14. Slide control shaft into place simultaneously slipping the fuel pump levers and the two control shaft collars on the control shaft.

15. Dowel the two collars in position.

16. Apply fuel pumps to casing. Make sure that the fuel pump inlet holes are lined up with respect to each other so that the fuel oil manifold will fit properly when it is bolted to the pumps. Pumps 1 and 6 should have stop block on the fuel pump racks which limit the rack travel to 22-1/2 mm.

17. Connect the fuel pump racks to the fuel pump levers with the adjusting screw pin.

18. Tighten fuel pump lever clamping bolts after equalizing racks on all pumps as closely as possible. Dowel levers to the control shaft. Finish rack equalization by turning the adjusting screw at the upper end of the fuel pump levers.

19. Check the control shaft for freedom of movement; there must be no roughness or sticking. Adjusting screw pins must also be free. If not, either shift the pump position or twist the levers slightly to obtain proper alignment.

20. Drop governor drive casing together with shims into position on the fuel pump drive casing and fasten securely with nuts and lockwashers.

21. Check backlash of the two spur gears. This should be .010 - .012 inches. Add or remove shims from under the governor casing until this clearance is obtained and then dowel in place.

22. Apply long link, short link, connecting link and cross shaft and connect operating lever to the control shaft. Be sure that the assembly is absolutely free. Renew the needle bearings for the cross shaft, if necessary.

23. Drop governor into position and tighten down. Shim underneath the governor with gasket material until .004 - .006 inches backlash is obtained between the bevel gears. Connect long link to governor piston rod with the pin, two washers and cotter pins.

24. Rack travel can be adjusted at this point. For the 660 HP units, set the racks at 9-1/2 mm; for the 1000 HP units, set racks at 7-1/4 mm. Tighten operating lever clamping bolt and dowel in place.

    Note that the operating range of the governor is approximately 15 mm; therefore, this results in 24 mm full rack for 660 HP engines and 23 mm for 1000 HP engines. Note also that the governor is at its shut down position when no oil is circulating.

25. Check all racks for equality at both shut down and full load position. Lock the two fuel pump rack stop blocks located on No. 1 and No. 6 pumps at the full load position, i.e., 24 mm for the 660 HP and 22-1/2 mm for the 1000 HP engines. Make sure that the fuel pump rack pointers are not rubbing on the racks. Clearance should be .008 inches.

26. Fasten the cutout cover assembly which contains the overspeed trip mechanism to the governor drive casing with the four capscrews and lockwashers.

FUEL PUMP CASING INSTALLATION

1. Press bushing into the fuel pump drive shaft bearing with a .001 - .002 inch fit, if the bearing has been removed.

2. Attach the bearing to the lower gear casing and align it with the dowel pins.

3. Drop the fuel pump camshaft gear into lower gear casing and mesh with the idler gear at the timing marks. See Gear Train Timing. Center the thrust collar on the gear hub in the lower gear casing.

4. Slip the two lower thrust bearing halves in place on each side of the thrust collar. The thrust clearance is .007 - .021 inches.

5. Set pump cutout pins in cutout position and bar engine over until all pumps are cut out.

6. Remove governor and governor drive casing from fuel pump drive casing.

7. Place about 5/32 inch thick shims over each pad on the engine block.

8. Mount pump drive casing on the cylinder block.

9. Remove long cover plate from bottom of casing.

10. Place a small jack under the casing at each end.

11. Slide camshaft into place from governor end of casing. Be careful not to damage the bearings. Also be sure that keyway in shaft lines up with keyway in gear, but do not insert the key. Tighten large slotted nut sufficiently to make the camshaft rotate with the gear.

12. Check camshaft gear backlash. This should be .007 - .011 inches. If incorrect, remove the dowels from the drive shaft bearing, tap the bearing in the direction required, tighten capscrews, but do not redowel at this point.

13. Obtain the proper camshaft bearing clearance in the fuel pump drive casing and the drive shaft bearing. With the camshaft resting on the bottom of the bearings, this clearance should be .003 -

.005 inches at the top and .0015 - .0025 inches at the sides. Note that these clearances must be obtained at the same relative positions on each of the four bearings, otherwise the camshaft will not be in alignment, (i.e. the camshaft will be running in a sprung condition). If necessary change the position of the drive shaft bearing to obtain bearing alignment, but be sure to check gear clearance.

14. Tighten all capscrews and nuts holding the pump drive casing to the engine block, check bearing and gear clearances and dowel in place. If the position of the drive shaft bearing was changed to obtain proper gear or bearing clearance, redowel at this point.

15. Remove large slotted nut, jar gear from camshaft and remove the camshaft.

16. Slide the two packing flanges, packing and flange to drive casing gasket into place on the fuel pump end of the drive shaft casing; apply the flange and casing to bearing gasket on the bearing end of the casing.

17. Slide the drive casing into position. Tighten capscrews securely at each flange.

18. Slide the camshaft back into position.

19. Install key in keyway, draw slotted nut tightly and insert the cotter pin.

20. Reinstall governor drive casing and check spur backlash.

21. Reinstall governor and check bevel gear backlash.

22. Apply control lever bracket and all other linkage and be sure that it is absolutely free.

23. Release the cutout pins and check the fuel pump timing.

24. Apply gasket and bottom cover to the fuel pump drive casing.

25. Install the fuel oil inlet manifold on the fuel pumps together with the gaskets and the inlet retaining screws.

26. Drop the upper two thrust bearing halves on each side of the thrust collar on the camshaft gear hub and install the upper gear casing. Tighten this down securely and be sure that the casing is tight against the drive shaft bearing.

27. Apply the camshaft end bearing to the gear casing and fasten in place with the lockwashers and nuts.

28. Install the water pump.

29. Connect all piping, tubing, wiring, etc. Be sure that the restricted fitting in the drive shaft bearing is clear.

30. Replace the locomotive hood.

ENGINE OVERSPEED TRIP

DESCRIPTION

The engine is equipped with an overspeed automatic stopping device which has been set in the factory on the test stand at approximately 900 RPM. This stopping device consists of two spring-loaded weights which, under normal operation, are against their inner stop. These weights do not move until the centrifugal force has become great enough to overcome the spring force, and when this point has been reached the weights move out instantaneously to their outer stop.

These weights in their outer position hit a trigger and release the cutout shaft which shifts endwise and allows the cutout plungers, which are spring-loaded, to engage the fuel pump crosshead guides and thus make the fuel pumps inoperative by holding the crossheads and rollers off the fuel pump camshaft, Fig. 55-1.

To reset, pull out each pump cutout plunger and turn until the trip pin points straight down. Pull out on the reset handle until it latches and then pull out and turn each plunger to engage trip pin in the notch in the rack, Fig. 56-1.

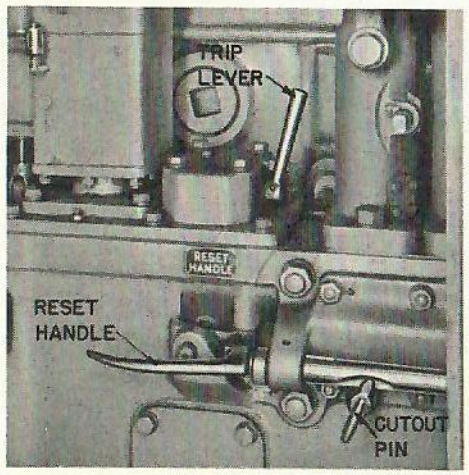

FIG. 55-1
OVERSPEED
TRIP

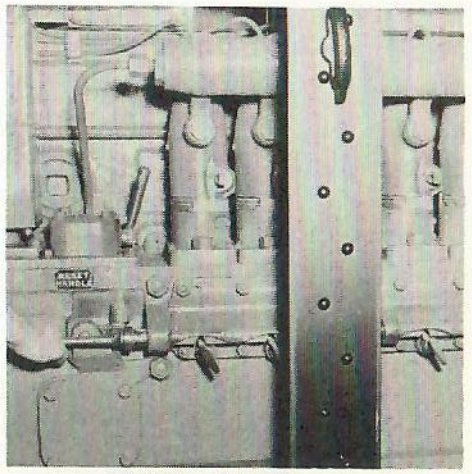

FIG. 56-1
RESETTING
OVERSPEED TRIP

During maintenance work, when the engine is not in operation and the safety device is tripped by hand by pulling the emergency trip handle, Fig. 57-1, it will sometimes be necessary to pull out all the cutout knobs and free them from the rack by turning them until the trip pin is pointing straight down, before the rack can be reset. This is due to some of the plungers not engaging with the pump crossheads which are not standing at top center.

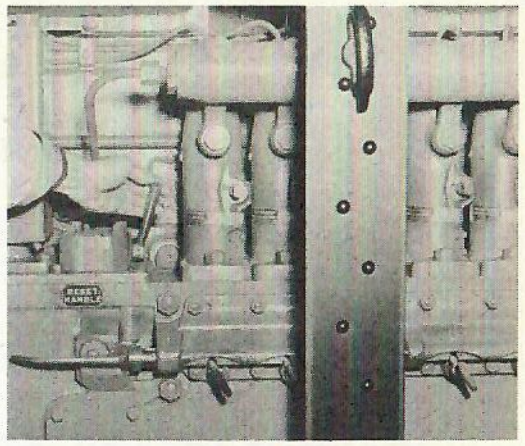

FIG. 57-1
TRIPPING
OVERSPEED TRIP

OVERSPEED TRIP REMOVAL

The weight assembly is built as a separate assembly and mounted between the fuel pump camshaft and governor drive gear.

The bolts holding this assembly in place also support the governor drive gear and gear cover. Remove the six nuts and drive the bolts out until they clear the weight assembly. The assembly can then be removed. However, the location of the assembly on the shaft should be marked so that it may be reinstalled in the same location.

OVERSPEED TRIP DISASSEMBLY

1. Remove guide pin.
2. Remove stop pins.
3. Turn the spring guide until the cotter pin, which locks the spring retainer to the spring guide, lines up with the slot in the plunger. Remove the cotter pin.

4. Unscrew the spring retainer from the spring guide and remove the spring.

5. Remove the plunger from the spring guide.

6. Remove the spring guide from the spacer.

OVERSPEED TRIP MAINTENANCE

Thoroughly clean all parts. Inspect for wear and broken springs. The clearance between the plunger and spacer is .001 - .003". The clearance between the stop pins and the spacer is .000 - .001". The guide pin has an interference fit of .0005 to a clearance fit of .0005" in the spacer.

OVERSPEED TRIP REASSEMBLY

1. Slide one plunger over the spring guide. Insert the spring, screw on the spring retainer and lock in place with the cotter pin.

2. Slide this assembly into the spacer.

3. Assemble the plunger, spring, spring retainer and cotter pin to the other end of the spring guide.

4. Drive in the guide pin and pean over the end.

5. Insert the two stop pins.

OVERSPEED TRIP INSTALLATION

Position the assembly to the end of the shaft and apply the six bolts. The two center bolts are ream bolts while the other four are machine bolts.

FUEL INJECTION PUMP

DESCRIPTION

The fuel injection pump has three major functions; metering the desired quantity of fuel to the injection nozzles in response to the governor demand, timing the quantity of fuel to be injected with respect to the crank angle and raising the fuel oil pressure to a pressure necessary for the accomplishment of efficient atomization.

The pump, Fig. 58-1, consists principally of a housing containing a barrel, plunger and delivery valve. The barrel is partially enclosed by a control sleeve, the upper portion of which is machined to a gear segment. The gear segment engages with the fuel pump rack which is mechanically connected to the governor through linkage. The lower end of the control sleeve engages the plunger. Governor demand is thereby mechanically transmitted to the fuel pump plunger.

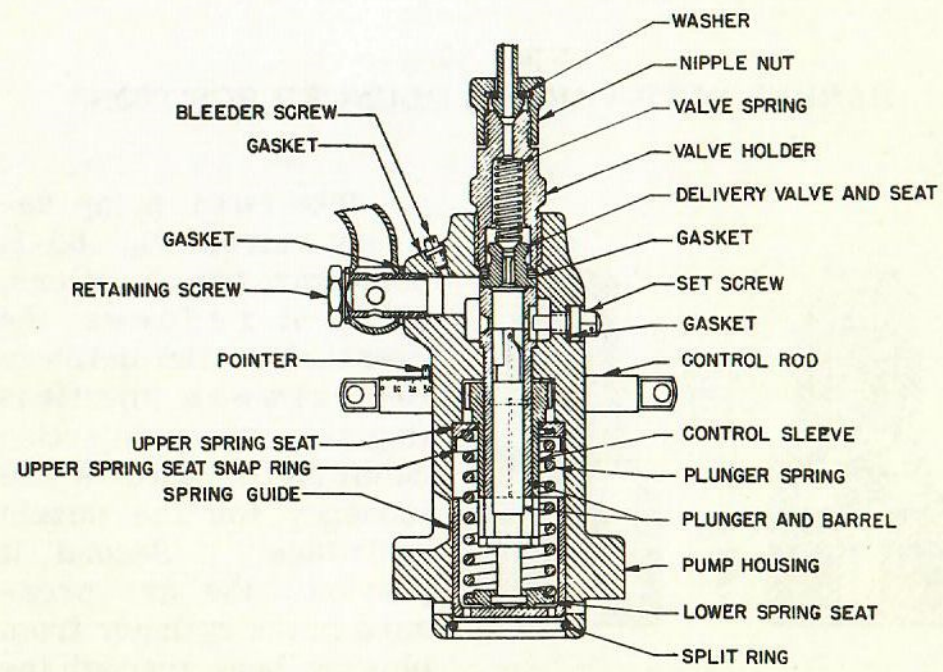

FIG. 58-1
FUEL INJECTION PUMP

The angular position of the pump plunger with respect to the barrel ports determines the quantity of fuel injected per stroke; the length of the plunger stroke remaining constant regardless of engine RPM.

The actual metering is done by a helical profile cut in the plunger which alternately opens and closes a port in the barrel, Fig. 59-1.

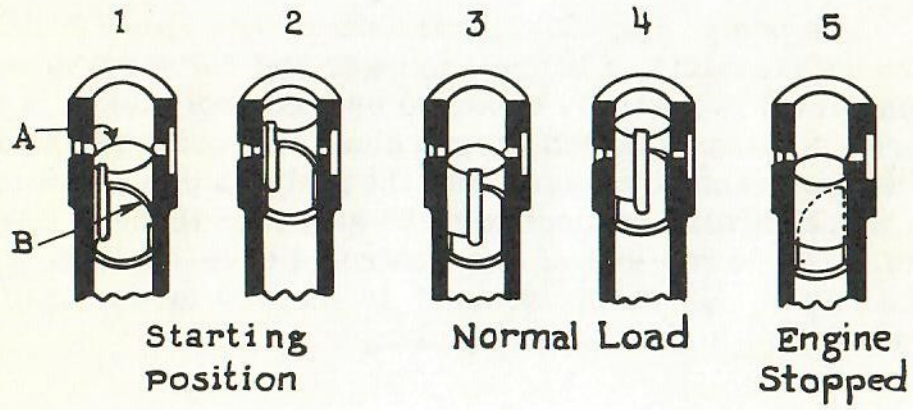

FIG. 59-1
BARREL WITH VARIOUS PLUNGER POSITIONS

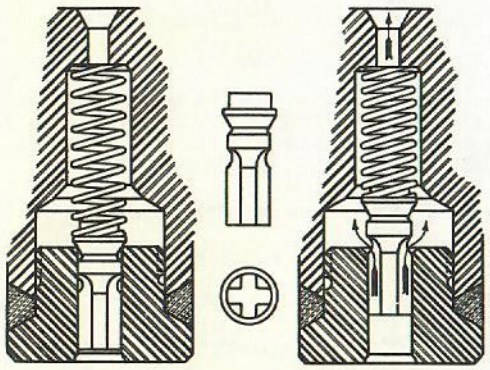

FIG. 60-1
DELIVERY VALVE

The fuel pump delivery valve, Fig. 60-1, performs two functions; First, it reduces the pressure in the delivery line between injections to give a sharp injection cutoff and reduces the tendency for the nozzle to dribble. Second, it prevents the gas pressure in the cylinder from blowing back through the system in event of a stuck nozzle valve.

PUMP REMOVAL

The importance of thoroughly cleaning pipe connections before removing cannot be overstressed. Clean with fuel oil using a stiff brush and wipe dry.

1. Disconnect high pressure fuel pipe from pump.
2. Remove fuel oil manifold inlet retaining screw and gasket.
3. Remove pin connecting the pump rack to the fuel pump lever.
4. Remove nuts from pump base and lift off pump.

PUMP DISASSEMBLY AND MAINTENANCE

The first step when working on fuel injection equipment it to have a pail or pan of clean fuel oil in which to rinse the parts. Make sure the bench and tools are clean. Cover the bench with clean paper.

1. Fasten the pump in a vise with its bottom flange up, holding the pump by the delivery valve holding nut. Do not hold the pump by the body.
2. Press down on the plunger guide cup and insert a piece of rod in the hole provided for this purpose on the side of the pump housing fit, Fig. 61-1. This will hold the plunger guide cup down.

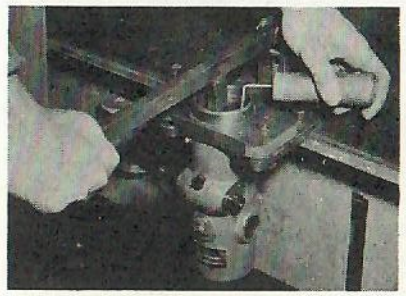

FIG. 61-1
COMPRESSING
GUIDE CUP

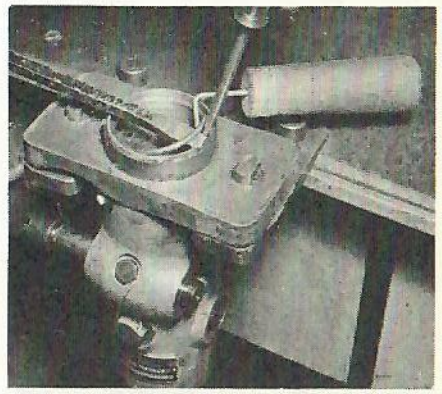

FIG. 62-1
REMOVING
SNAP RING

3. With the aid of two screwdrivers, remove the split ring, Fig. 62-1.

4. Press down on the plunger guide cup, pull out the rod and remove the plunger guide cup, lower spring seat, plunger spring, plunger, spring ring, upper spring seat and control sleeve, Fig. 63-1.

5. Remove control rod set screw and control rod.

6. Turn the pump over and fasten it in a vise, holding it by the flange. Unscrew the delivery valve holding nut, Fig. 64-1. Remove the delivery valve spring and with the aid of the delivery valve removal tool, remove the delivery valve and gasket from the pump housing, Fig. 65-1. This tool works on the same principle as a gear puller. Should the delivery valve and seat become damaged, replace them with a new assembly as the valve and seat are lapped together as a mated assembly. However, the valve may be reseated by lapping with a fine compound. Take

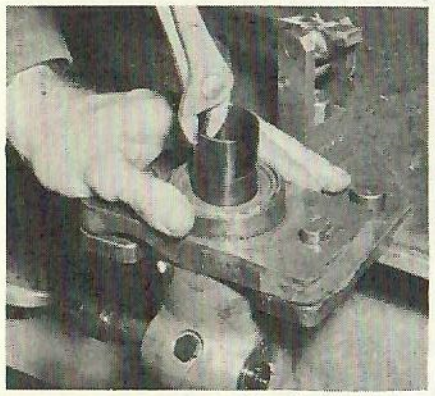

FIG. 63-1
REMOVING
CONTROL SLEEVE

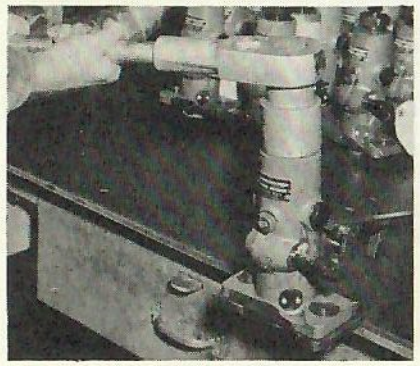

FIG. 64-1
REMOVING
HOLDING NUT

FIG. 65-1
REMOVING
DELIVERY VALVE

extreme care to prevent the compound from getting on the valve flutes and bore of the valve body.

Renew the delivery valve gasket.

There is no gasket between the face of the delivery valve and the plunger barrel. This is a ground joint and should be carefully guarded against damage when removed. This joint rarely requires any attention, however, lapping with a surface plate and very fine compound will easily restore its surface.

7. Remove barrel set screw and push the barrel out through the top of the pump housing.

8. Do not remove the control rod pointer, pointer fastening screw or adjusting washer as these are set and should not be touched, otherwise it will be impossible to get the same output from each pump. The control rods are set with shims added behind the pointer to give an equal amount of fuel to each cylinder. When installing a new pump, adjust governor linkage where the control rod connects to the clevis so that the pointer on the new pump indicates the same as the original pump in all positions. For instance, if in "stop" position, the pointer on the pump is at 7 millimeters, set the new pump so that the pointer is at 7 millimeters. If, after setting the pump in this manner, there is a fuel knock, reset rack by turning the clevis 1/2 turn clockwise. There should never be more than one-half millimeter variation between the pumps.

9. The barrel set screw may show signs of errosion as a result of oil pressure being released when the barrel ports are uncovered. If deep errosion pits to the extent of possible set screw disintegration are noticed, the screw should be replaced.

10. Excessive wear in the pump rack bushings can be detected by shaking the rack. Any abnormal side movement is an indication that the bushing should be replaced. In order to do this, the pump should be completely dismantled. Place the pump on an arbor press and with a bushing removal tool press out one bushing, Fig. 66-1. It should be noted that the shank diameter of this tool is slightly smaller than the outside diameter of the bushing. Remove the pump from the press and allow the old bushing to fall out of the base opening of the pump. Place the pump back on the press and remove the second bushing.

New bushings may be applied by placing the pump on an arbor press and with bushing applicator apply one bushing at a time. In this case, it should be noted that the shank diameter of the bushing applicator is slightly larger than the outside diameter of the bushing.

When both bushings have been applied, they should be reamed with a special reamer, Fig. 67-1. In this operation the reamer should be started very carefully, holding it in line with the bore of the bushing to prevent the hole from becoming egg shaped.

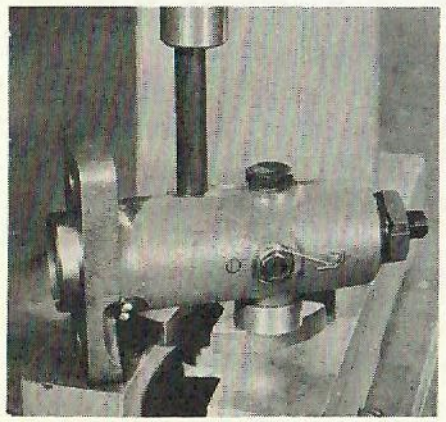

FIG. 66-1
REMOVING
BUSHINGS

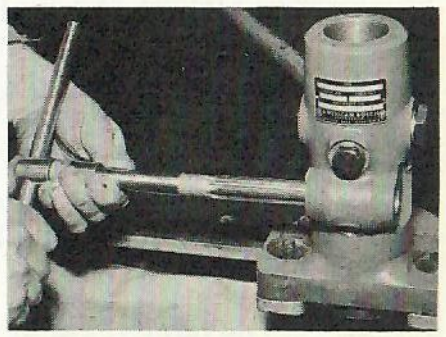

FIG. 67-1
REAMING
RACK BUSHINGS

PUMP REASSEMBLY

Thoroughly wash and rinse all the parts before assembling, never wipe them with a cloth or piece of waste. Rinse off each piece and then assemble it wet in the pump body. Make sure that the seat between the plunger barrel and body is clean; carefully scrape off any signs of dirt as this joint must be tight to insure against leakage down into the spring chamber. The plunger barrel must be located so that the long slot is towards the locking pin. Screw the locking pin up tight and make sure that the plunger barrel moves up and down freely. Install the delivery valve and seat with gasket in place; push the delivery valve down with the fingers as far as possible and then screw down in place with nut. Never screw the valve in place with a wrench. The valve should seat by hand, but if it does not, remove the valve and start over again. After the valve is on its seat use a wrench to tighten up the nut, but do not strike with hammer. Use a pipe to get a steady, even pull.

When all parts are tight, remove from the vise and turn the pump over and fasten in the vise again holding the pump by the delivery valve holding nut. If the control rack has been removed install the control rack so that the tooth that is notched on the rack is up and visible through the slot cut in the pump body for this purpose. Then, put in the stop screw for the control rod. Next, install the control sleeve, making sure the slot on the sleeve is directly in line with the slot on the control rod. When the slots are in line, lower the upper spring seat in place and install the snap ring. Install the spring. Assemble plunger in the plunger barrel making sure that the slot on the turning wings of the plunger line up with the slot on the control sleeve, Fig. 68-1.

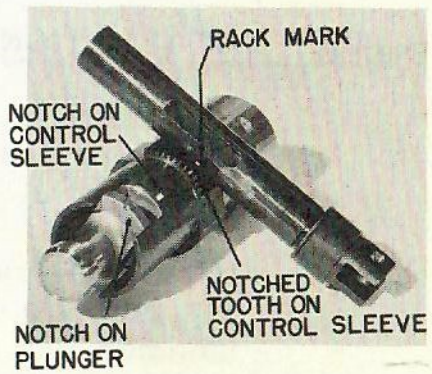

FIG. 68-1
ALIGNMENT OF
CONTROL ASSEMBLY

Put the lower spring plate over the end of the plunger and lower in place. Install spring guide and press down to make sure turning wings on plunger mesh with long slot on regulating sleeve. If everything is assembled properly, press down on the guide and hold it down with the aid of the drill rod through the hole and apply split ring.

IMPORTANT: Before removing the drill rod, remove barrel set screw and put the control rod in the "stop" position and note opening through the hole. This should never be more than a half hole or less than one-third hole. If this is not the case, dismantle the pump and check assembly.

On the older style pumps, the assembling marks are a little different. When assembling one of these, the two center punch marks are to be up and just so they are visible on both sides of the pump body. On the flange fit of plunger body will be found a center mark. At the bottom of large slots in regulating sleeve there is a center mark. This mark is to be meshed with the control rod so that it is directly in line with the center mark on the body flange. The plunger also has a center mark on the turning wings; this is to be in line with the other center marks. The rest of the assembly is the same as has been described.

PUMP INSTALLATION

1. With the pump cam follower at bottom of stroke, place pump in position over studs and secure with nuts.

2. Connect fuel rack to control shaft lever by applying pin. Do not force the pin. With a soft hammer, tap the pump flange until the pin can be freely applied and the rack moves freely. Apply cotter key to pin.

3. Securely tighten pump to casing.

4. Apply fuel manifold gaskets and tighten the fuel inlet retaining screw.

5. Attach high pressure fuel pipe. Be sure the piping fits the pump correctly so that the pipe is not under stress.

6. Adjust the rack travel to correspond with that of the remaining pumps on the engine.

7. Check pump timing.

PUMP TIMING

To check the timing of all fuel pumps, bar the engine over in the direction of rotation, or counterclockwise when viewed from the generator end, until the timing mark on any one fuel pump spring guide is beginning to rise. Continue to bar the engine over until the pointer in the end cover is adjacent to the mark on the barring wheel. The piston of this cylinder is approaching Top Dead Center on its compression stroke and is at the correct crankshaft angle of 15 degrees B.T.C. With this crankshaft setting the mark on the fuel pump spring guide should be line-in-line with the two stationary marks on the pump window, Fig. 45-1.

If these marks do not line up, remove the cover plate on front of the pump drive casing, but first turn all the cutout pins to their inoperative position by disengaging them from the cutout shaft and turning them to the right about 180 degrees or one-half turn.

Move the manual trip lever on the end of the pump casing until the trigger releases the cutout shaft, thus allowing it to move to the left or cutout position, Fig. 57-1. If the above instructions are not followed, and the cutout cover is removed, this shaft and all cutout pins will drop into the cutout position as soon as the cover is moved out far enough to allow the trigger to become disengaged from the end of the shaft.

After the cutout cover has been removed, loosen the tappet cap nut until free; then turn the tappet adjusting screw up or down, whichever is required, until the timing marks are line-in-line. Tighten the tappet cap nut. The pump will then be properly timed.

Continue on through the firing order 1-3-5-6-4-2 to check the timing of the remaining pumps, i.e. if No. 6 pump is the first one checked, the next will be No. 4, then No. 2, No. 1, No. 3 and No. 5.

After reassembling the cover, reset the trip shaft and turn all the cutout pins to their operating position, Fig. 56-1. It is always best, after this cover has been removed and reassembled to start the engine and trip the overspeed cutout by the manual lever to be sure that all the cutout pins function properly.

When checking the pump timing, if the mark on the barring wheel has been turned beyond the pointer, do not move back to it, but go back beyond it and again come up to pointer. This is very important as all backlash must be out of the gears in order to get a true reading.

If there is any question about the fuel pump timing marks on the barring wheel not being correct, the timing may be checked as follows:

With a protractor, check the number of degrees the locomotive is out from true level. This must be taken crosswise of the locomotive and should be taken on some machined surface of the engine. Then, with the protractor set to 15 degrees, add to it (or subtract from it) the number of degrees the locomotive is out of level. Place the protractor on the crank web and turn the crank very slowly in the proper direction until the bubble in the protractor is centered. The pump at this cylinder should be line-in-line.

To check for the proper setting of the protractor, the following example is given. If the locomotive is setting

so that it is five degrees low on the fuel pump side and the engine timing is 15 degrees B.T.C., set the protractor to 10 degrees B.T.C. If the locomotive is 5 degrees high on the fuel pump side, set the protractor to 20 degrees B.T.C.

The fuel pump rack stops on the 660 HP engine are set at 24 mm and on the 1000 HP engines at 22-1/2 mm.

Individual rack adjustments may be made where the rack connects to the vertical lever in back of the pumps. Remove the pin and turn the turn-buckle in or out (1/2 turn equals 1/2 mm adjustment on the rack).

PUMP IDENTIFICATION

Engine HP	Stop Position	Full Load Position	Bosch Designation: New APF1D	Bosch Designation: Re-conditioned APF1D
600 or 660	9.5-10 mm	24 mm	160-T-82	160-PS-82U
1000	7 - 8 mm	22.5 mm	200-T-82	200-PS-82U
900	6 - 7 mm	21 mm	200-T-82	200-PS-82U

It should be noted that the only way to determine the difference between 660 HP and 1000 HP pumps is by the Bosch pump designation number.

The number starts with 160 for 600 and 660 HP pumps and 200 for 900 and 1000 HP pumps.

FUEL INJECTION NOZZLE AND HOLDER

DESCRIPTION

The function of the fuel injection nozzle and holder, Fig. 69-1, is to direct the metered amount of fuel from the fuel pump into the engine combustion chamber in a definite pattern and in such a manner as to obtain the best in efficient burning.

Nozzle

The spray nozzle is of the closed, hydraulically operated differential type, Fig. 70-1. It consists of two parts, namely; the nozzle body and the nozzle valve. These parts are made of heat treated alloy steel to minimize wear and promote durability. The nozzle body and valve are lapped to form a mated assembly. Therefore, these parts cannot be exchanged singly, but must be kept together at all times.

The nozzle valve is spring loaded and seats above the spray holes, thereby closing them after each injection of fuel into the engine combustion chamber; the valve is opened by the fuel pressure opposing the valve spring force.

At the tip of the nozzle body are several orifices (spray holes) which atomize the high pressure fuel as it passes through into the combustion chamber.

Nozzle Holder

The nozzle holder is used to hold the nozzle in its correct position in the engine cylinder head and to provide a means of conducting fuel oil to the nozzle, Fig. 69-1. It also contains the spring and adjusting screw necessary to control the opening fuel pressure of the nozzle valve.

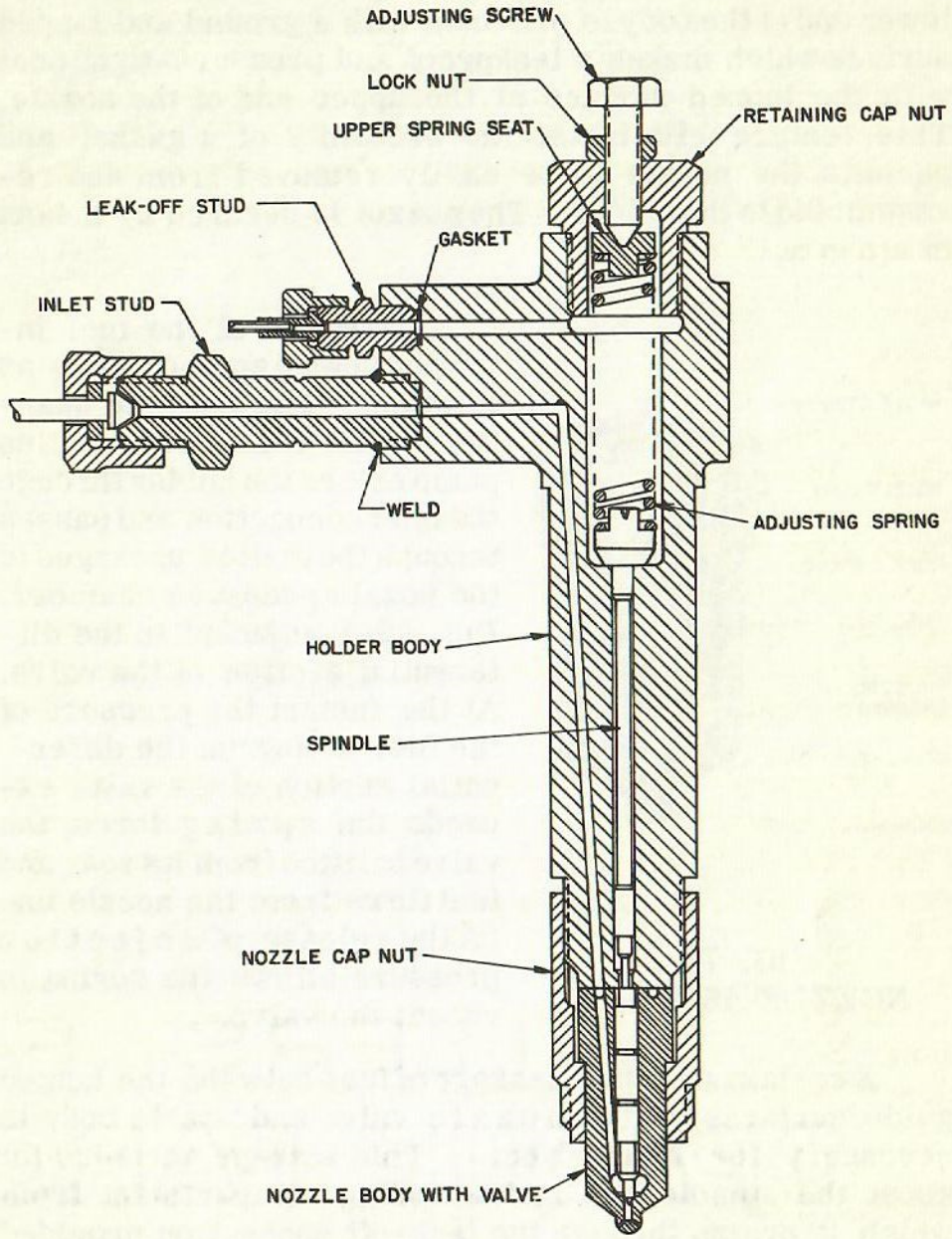

FIG. 69-1
NOZZLE AND HOLDER

The component parts of the nozzle holder consist of a steel holder body with drilled passages for conducting the fuel from the inlet connection to the nozzle tip. The lower end of the body is provided with a ground and lapped surface which makes a leakproof and pressure-tight seal with the lapped surface at the upper end of the nozzle. This feature eliminates the necessity of a gasket and permits the nozzle to be easily removed from and reassembled to the holder. The nozzle is secured by means of a cap nut.

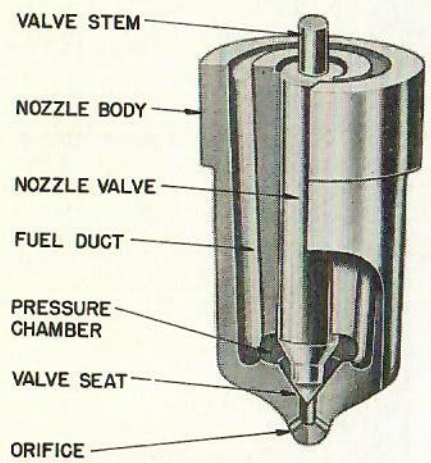

FIG. 70-1
NOZZLE ASSEMBLY

Operation of the fuel injection nozzle and holder is as follows: The metered quantity of fuel from the injection pump enters the holder through the inlet connection and passes through the drilled passages to the nozzle pressure chamber, Fig. 69-1, adjacent to the differential section of the valve. At the instant the pressure of the fuel acting on the differential section of the valve exceeds the spring force, the valve is lifted from its seat and fuel flows from the nozzle until the release of injection pressure allows the spring to reseat the valve.

A certain amount of leakage of fuel between the lapped guide surfaces of the nozzle valve and nozzle body is necessary for lubrication. This leakage accumulates about the spindle and in the spring compartment from which it drains through the leak-off connection provided for the purpose.

NOZZLE AND HOLDER REMOVAL

1. Disconnect high pressure fuel pipes and drain lines.

2. Remove nuts from studs holding the retaining clamp.
3. Remove retaining clamp, pull nozzle and holder with the extracting tool and remove copper gasket from the nozzle hole in the cylinder head or from the nozzle body as the case may be.

NOZZLE AND HOLDER DISASSEMBLY, INSPECTION AND MAINTENANCE

In the outlining of procedure for inspection and cleaning of the spray nozzle, the necessity of cleanliness cannot be overemphasized. A clean work bench, clean washing containers of fuel oil, clean hands and a clean air supply are all essential to produce satisfactory results.

Before disassembling the spray nozzle and nozzle holder assembly, wipe all dirt and loose carbon from the assembly with a clean cloth. Clean the nozzle tip with a brass wire brush, Fig. 71-1. Test the unit on the nozzle test stand, Fig. 72-1 and check on the following:

1. Spray characteristic of the spray nozzle.
2. Opening pressure of the spray nozzle.
3. Tightness of valve seat.

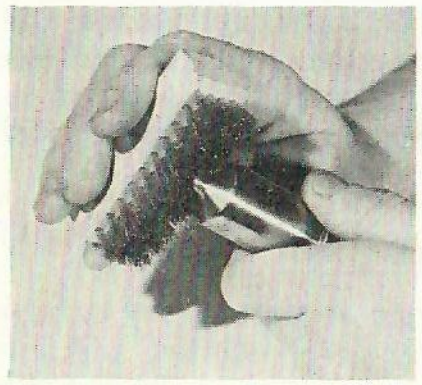

FIG. 71-1
CLEANING
NOZZLE BODY

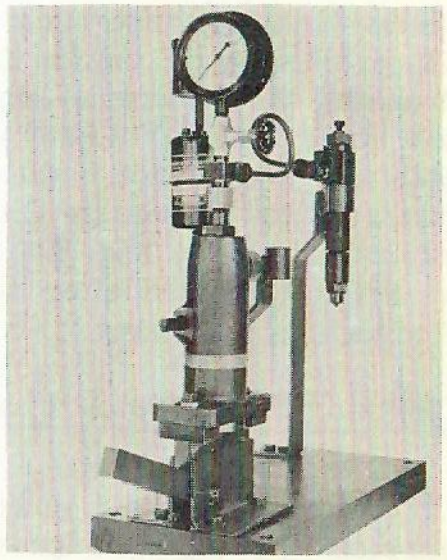

FIG. 72-1
NOZZLE
TEST STAND

Checking Spray Characteristic of Nozzle

The spray characteristic can be checked by actuating the tester handle about 20 strokes per minute with the gauge shut off. All the holes in the nozzle should be open ejecting the same amount of fuel and the spray pattern should be uniform.

Checking Opening Pressure of Nozzle

Before accepting pressure gauge readings as accurate, be sure the gauge is in proper adjustment. Periodic checks of the pressure gauge on a dead weight tester are absolutely necessary. The pressure gauge may be damaged when the nozzle test stand pump handle is moved rapidly. Therefore, the gauge shutoff valve should always be kept closed except when actually checking the opening pressure.

To check the opening pressure of the nozzle, move the tester handle up and down slowly and record the pressure at which the nozzle opens. The opening pressure for new holders and nozzles as received should be 3900 psi to 4050 psi. If used holders with used nozzles are dismantled or reassembled, set for 3700 psi to 3800 psi. The pressures will then usually settle to 3600 psi opening pressure in the engine which is desirable. Any nozzle and holder assembly removed and found to be opening at 3600 psi should not be reset. To make a pressure adjustment on the nozzle loosen the lock nut and turn the adjusting screw, Fig. 69-1. Make sure the lock nut is securely tightened after an adjustment has been made. Recheck on test stand.

Checking Tightness of Nozzle Valve Seat

Tightness of the valve seat can be checked by bringing the tester handle down slowly, repeatedly, and observing that the fuel spray commences each time at the same opening pressure. The movement of the nozzle valve returning to its seat is accompanied by a sharp staccato noise and is termed "nozzle chatter". If there

is no leakage or dribbling when the pressure is raised slowly and held within 50 pounds of the specified opening pressure, the nozzle may be considered tight.

Cleaning the Spray Nozzle

If the nozzle or the spray pattern is not uniform or one or more nozzle holes are plugged, service the nozzle as follows:

1. Place the nozzle holder assembly in the holding fixture with the nozzle pointing upward and using the correct size box wrench, unscrew the nozzle cap nut, Fig. 73-1; carefully remove the spray nozzle (do not use a pipe wrench). The nozzle valve and body are a mated assembly and cannot be interchanged with lapped parts from other spray nozzles. Protect the lapped surface at the end of the nozzle holder by screwing the nozzle cap nut back in place. If nozzle is stuck in nozzle holder cap nut because of carbon formation, carefully remove by using a brass rod, one end of which conforms with the contour of the nozzle tip, Fig. 74-1.

FIG. 73-1
REMOVING
CAP NUT

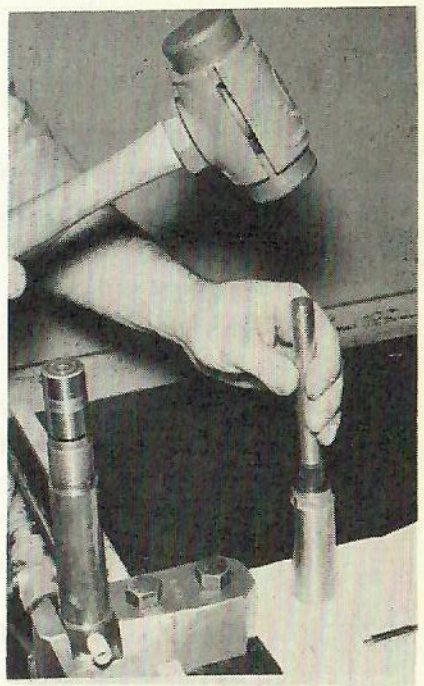

FIG. 74-1
REMOVING NOZZLE
FROM CAP NUT

2. Soak the spray nozzle in clean fuel oil and withdraw the nozzle valve from the nozzle body. Examine for gum, carbon deposits at or near the valve seat. If deposits are present, the nozzle body and valve should be allowed to soak thoroughly in a suitable mineral spirit washing solution. If large deposits of hard carbon are present on the nozzle valve and inside and outside of the nozzle body; soak the units in cleaning solvent; Bendix "Metal-Clene", Karbonoff Cleaner, "Gunk", Magnus 755, Turco Transpo or Acetone. Cleaning may require from a few minutes to several hours depending on the cleaner used and the condition of the nozzle and valve.

3. Nozzle valves which are stuck due to scale or other abrasives lodged between nozzle valve and body and which cannot be removed after thoroughly soaking in the solvent should be removed in the nozzle valve ejector, Fig. 75-1 and Fig. 76-1.

4. Do not use a cleaning needle on a plugged nozzle hole until after the nozzle body has been soaked several hours or longer in solvent. This loosens the carbon and generally the holes can be cleaned by using an air hose at the nozzle valve hole. If this is not successful, they should be cleaned by probing with a cleaning needle held in a pin vise, Fig. 77-1. It is important that the cleaning needle be a size smaller than the spray hole. The operator must be careful in cleaning these holes to prevent the needle from being broken off in the hole as it is difficult and sometimes impossible to remove broken pieces.

5. After soaking in the cleaning solvent, the nozzle body and valve should be thoroughly rinsed in clean fuel oil several times. Before fitting the nozzle valve to the nozzle body, dip these parts in clean fuel oil. With the aid of fuel oil as a lubricant, the nozzle valve should slide slowly

into place without any binding action when the nozzle is held at a 45 degree angle. If binding is present, the condition may usually be rectified by applying a little mutton tallow or a paste of talcum powder mixed with a few drops of clean fuel oil on the nozzle valve shank and working the valve back and forth in a rotating manner. Do not strike the valve seat when working the valve in the body. Thoroughly rinse both valve and the nozzle body after each operation.

FIG. 75-1
NOZZLE VALVE
EJECTOR

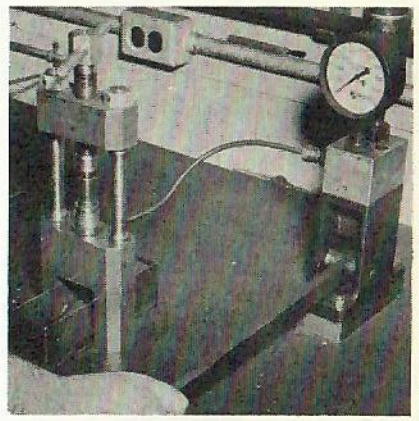

FIG. 76-1
REMOVING
NOZZLE VALVE

FIG. 77-1
CLEANING
NOZZLE HOLES

Do not use hard or sharp tools, emery cloth or crocus cloth. The nozzle valve can be cleaned with mutton tallow used on a cloth or felt pad. The valve may be held by its stem in a revolving chuck during this operation. A brass wire brush will be helpful in removing carbon from the valve. A special nozzle body pressure chamber scraper, Fig. 78-1, and nozzle valve seat scraper, Fig. 79-1, should be used to clean the nozzle body internally.

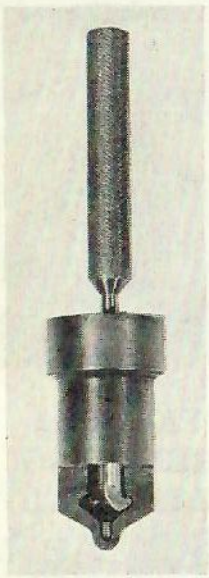

FIG. 78-1
CLEANING NOZZLE
PRESSURE CHAMBER

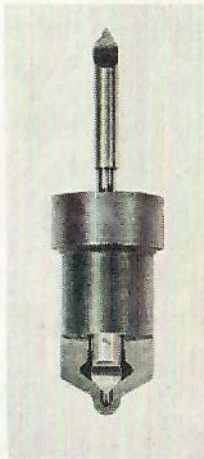

FIG. 79-1
CLEANING NOZZLE
VALVE SEAT

Examination of Parts

Examination should not be attempted until all parts have been carefully washed and all grease and dirt removed.

Examine all parts carefully. In general, it will be found that there has been only minute wear but abnormal conditions, such as moisture or corrosive fuels may have caused damage to the extent that parts will require replacement.

Holder Body

The lapped surfaces at end of the nozzle holder must be free from scratches which cause imperfect seals between these surfaces and the upper lapped surface of the nozzle body. It is impossible to remove small scratches on the lapped ends of the holder and nozzle body by lapping them with the aid of a lapping plate and lapping compounds, Fig. 80-1. The nozzle holder should be held in the nozzle holder fixture for this operation.

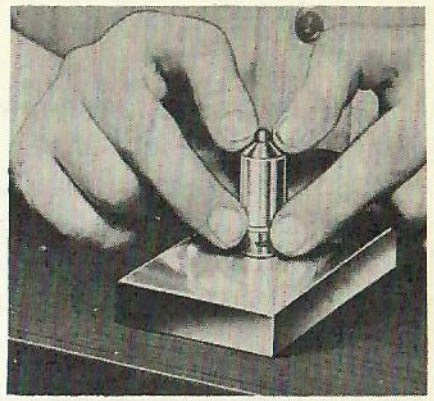

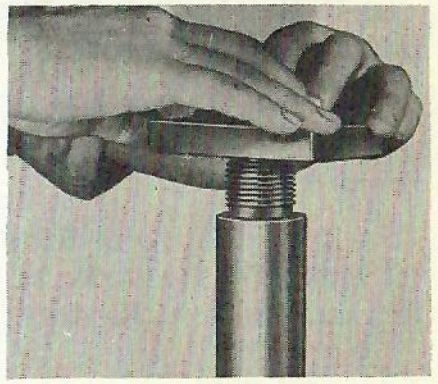

FIG. 80-1
LAPPING NOZZLE
AND HOLDER

Charge the lapping plate with American Bosch fine compound BM 10007 or equivalent and move it across the surface of the nozzle holder until the scratches are removed. During this operation care should be exercised to keep the plate square with the nozzle holder to insure contact with the entire area being resurfaced. The plate must be moved steadily with no rocking motion. To charge a lapping plate, compound is placed on one plate and a second plate brought to bear against the first one. The two plates are rubbed together using a figure eight motion. The plates are wiped of excessive compound and are now ready for lapping nozzle and holder.

Remove all traces of lapping compound with cleaning fluid or fuel oil and thoroughly blow off with filtered compressed air.

All threads in holder must be in good condition.

Nozzle Cap Nut

Remove all carbon deposits on both inner and outer surfaces. Inspect it for cracks due to overtightening or a damaged lower seating surface. The seating surface which contacts the copper gasket may be restored by rubbing it on emery cloth. Any cap nut which cannot be reconditioned must be replaced with a new one.

Pressure Adjusting Spring

If the spring is scratched or pitted it must be replaced with a new one. Always replace questionable springs.

Bleeder Screw

Inspect the bleeder screw ball seat. Make sure that it is tight as a leak at this point will cause excessive drainage out of the drain line.

Leak-off Stud

Make sure the leak-off stud gasket is in good condition and the stud is tight in the holder as a loose stud will cause crankcase dilution.

NOZZLE RECONDITIONING PROCEDURE

The method herein described is by no means difficult. It does, however, require reasonable training of the operator as well as some special tool equipment.

The first step is a thorough understanding by the operator of the objective to be obtained in this nozzle reconditioning procedure. For that purpose, study carefully Fig. 81-1, which shows a sectional view of a nozzle body with its valve on the seat.

Letter "A" denotes that line or ring on the valve seat which makes contact with the body seat. It is at

this location that the leakproof seal is made. This line must not be wider than 1/64", preferably less. Greater width generally results in leakage. It also decreases the amount of nozzle "chatter".

Letter "B" denotes the clearance between the valve and body as obtained by lapping with a coarse compound, thus removing material and permitting only the narrow line at "A" on the valve to contact the body seat.

The procedure to achieve what Fig. 81-1 illustrates is as follows:

1. First clean nozzle and its valve as directed previously.
2. Examine seat in nozzle body with a light and magnifying glass, Fig. 82-1, to determine whether it is pitted, grooved or pounded as the result of many operating hours. Should the seat be other than in good condition, it must be refinished by the use of a cast iron tipped lapping arbor. Arbors are supplied four in a set. Each arbor is slightly different in diameter. Select the largest one which will enter the nozzle body.

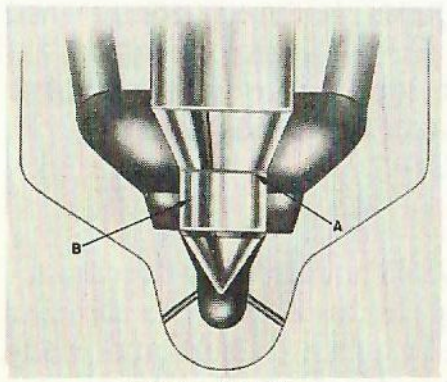

FIG. 81-1
NOZZLE
VALVE SEAT

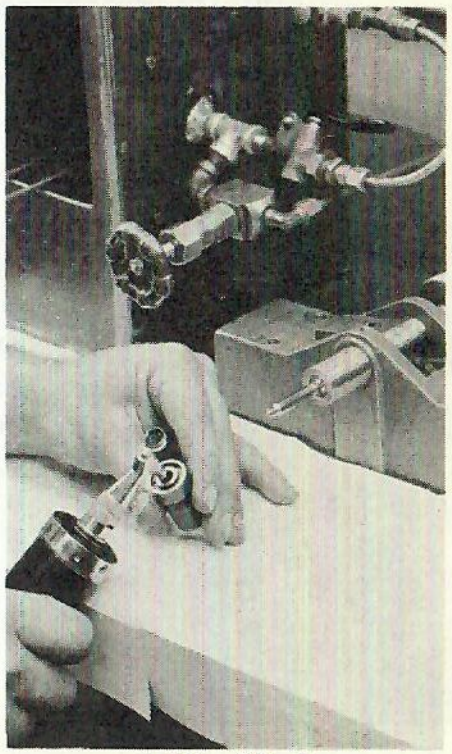

FIG. 82-1
LAPPING
TOOL

3. Insert selected arbor in lapping machine, Fig. 82-1. Start machine and observe whether arbor runs "true". Do not attempt to lap with an arbor that wobbles.

4. Stop machine and with wood splinter apply small amount of American Bosch fine lapping compound, BM 10007 or equivalent on the conical cast iron tip of the arbor. With fingers, apply a thin coat of mutton tallow to arbor shank.

5. Carefully slide nozzle body over the lap arbor until it bottoms on the body seat then rotate the body by hand a few times to distribute the compound. Start machine and let the arbor work into the body seat. Apply only intermittent light pressure. Rotate nozzle body slowly to right by hand.

6. By frequent inspection of the arbor, it is possible to detect any grooving action on its cone tip. If grooves form, they must be removed by dressing the arbor on the valve grinder, Fig. 83-1.

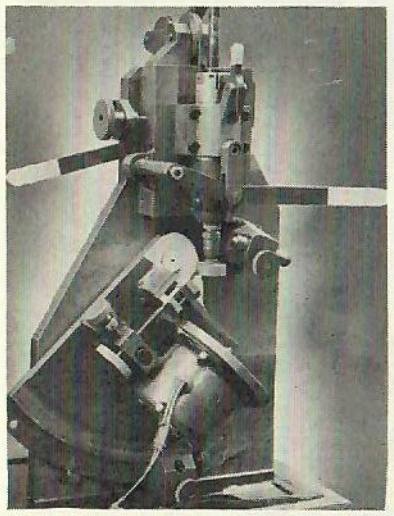

FIG. 83-1
VALVE GRINDER

CAUTION: Do not lap body seat any longer than absolutely necessary. The seat should be inspected frequently with the light and magnifying glass. If no pits or grooves are noted, the body is considered ready for the next operation - - that of lapping it with its valve to obtain condition shown in Fig. 81-1.

7. Wash nozzle body thoroughly in fuel oil or similar cleaning fluid and make certain that the lapping compound has been removed.

NOTE: After use always regrind the lapping arbor tip on the valve grinder. The correct angle is 59-1/2°. Never start the lapping operation with a lap that has not been refinished.

8. The next step is to examine the seat of the nozzle valve with the aid of a magnifying glass. If this seat surface is in good condition, free from grooves and not scored, it is satisfactory for lapping to the nozzle body. Otherwise, the seat surface must be reconditioned on the valve grinder. The correct angle is 60°.

CAUTION: Do not remove more material than absolutely necessary during this operation. Just barely touch the valve with the grinding wheel.

9. Since the nozzle body and its valve are now considered to be in servicable condition, they can be lapped together to obtain the line contact at the seating point similar to that in a new nozzle, Fig. 81-1.

10. This final lapping operation is by far the one requiring the most skill and care. Its success depends upon how well the lapping compound is controlled to obtain a good seat without upsetting the difference in angle between the nozzle body seat and valve.

This is performed using Cloverleaf D or E compound from which most of the oil has been removed. This compound is purchased with the oil mixed and various methods are used to dry it such as placing a small amount in a tin box and placing cloth or tissue paper in the box with it to absorb the oil. Only enough oil should be left in the compound to hold it together. Too much oil in the compound will cause it to move up the face of the cone too rapidly, thereby dulling the edge of the cone and preventing good

line contact. The valve is placed in the lapping machine and a very small amount of grinding compound applied to the end of the needle valve at point "B", Fig. 81-1. Make sure that both the seat in the nozzle and the seat on the valve are dry.

Carefully slide the body of the nozzle over the valve and rotate the body a few times to distribute the compound using only very light pressure against the nozzle valve. Start the machine and work the two surfaces together by slowly rotating the body to the right using intermittent pressure against the valve. This pressure should be lightly applied at first and may be slowly increased as lapping continues. The nozzle body should be removed from the valve frequently and an examination made of the valve seat. The compound should not be allowed to spread above the line of contact at the top edge of the valve seat, point "A", Fig. 81-1. If this occurs, the relative angularity between the valve and nozzle will be destroyed and the nozzle will not operate properly. When the lapping compound shows danger of passing beyond this point, it should be removed from both the valve and nozzle seats and fresh compound applied. It is imperative that during this phase of the lapping operation, both seats be dry and clean before fresh compound is applied.

The above process should be repeated until a thin bright line of contact is obtained at the very upper edge of the valve seat as shown by the shaded area in Fig. 81-1. The ideal condition of the valve shows a blend from this shiny line of contact to a dull grey at the bottom edge of the seat. If the lapping compound is observed to spread over the whole valve seat rapidly during the lapping process, it may be due to either the compound being too damp or the difference in angle between the nozzle and valve being too

small (valve seat angle 60° - body seat angle $59\text{-}1/2^{\circ}$). Further drying of the compound will correct the former conditions. The latter condition may be overcome by shortening the interval of time of lapping before the old compound is removed and fresh compound is applied. This interval of time will be found to be very short at first and may be increased as the condition becomes improved.

When the condition of the valve as shown in Fig. 81-1 has been obtained both the nozzle and valve seats should be cleaned, then mutton tallow or rouge dampened with fuel oil applied to the valve seat. The nozzle may then be lapped a short time with the rouge in place of compound. This operation is done to remove any particles of compound that may remain imbedded in the metal and which might cause continued lapping action during operation in the engine.

Occasionally, after the rouging operation, it will be observed that the line of contact at the top edge of the needle will have visibly widened. If this condition is too pronounced, it is wise to relap with grinding compound as it indicates that the difference in angle between the body and valve seat is too small. Rouge or tallow should again be used in the final operation. Clean body and valve thoroughly.

The nozzle is now ready to be assembled for testing.

11. Items 6 and 8 caution against too much removal of material from both the nozzle body and the seat on the valve. This is for the reason that the lift of the nozzle valve must always remain within the specified limit of .0177 - .0197 on the 660 and .020 - .022 on the 1000 HP engine. Exceeding that amount indicates the hardened surface of the seat in the body has been pene-

trated beyond a permissible limit. The increased lift further more results in a more forceful impact of the valve on the body seat.

The combination of these two conditions is bad because it causes the seat to pound out after a relatively short period of operation and makes nozzle unfit for further reconditioning or use.

It is of the utmost importance therefore to check the valve lift before and after nozzle reconditioning operations. This will eliminate nozzles that cannot be expected to give reasonable additional service. Fig. 84-1 illustrates an adapter which is available for checking nozzle valve lift quickly and accurately. Place a steel straight edge across the extended plunger and force upwards until the straight edge contacts the barrel. In this position, set dial indicator to zero and remove straight edge.

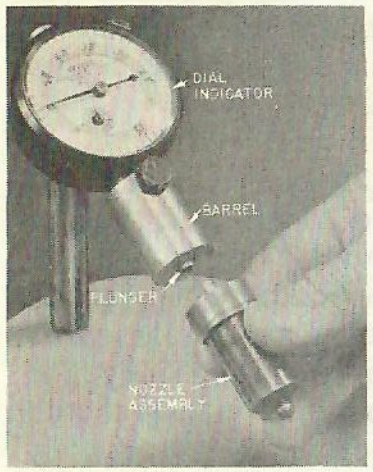

FIG. 84-1
CHECKING NOZZLE
VALVE LIFT

With nozzle assembly in hand as shown in Fig. 84-1, engage extended end of nozzle valve into the plunger hole. Force nozzle body squarely against barrel and read dial indicator. This will measure the valve lift which must be within the specified limit of .0177 - .0197 on the 660 and .020 - .022 on the 1000 HP engine.

REASSEMBLY OF NOZZLE HOLDER AND SPRAY NOZZLE

The nozzle holder is assembled first by placing the nozzle holder fixture. Assemble spring spindle, spring and upper spring seat in nozzle holder and then apply

retaining cap nut. Apply lock nut to adjusting screw and apply to cap nut turning it down until it strikes upper spring seat. Remove nozzle holder from fixture and replace in inverted position. Place nozzle on the nozzle holder in inverted position and lower cap nut over nozzle. Put centering sleeve over nozzle and hand tighten nozzle cap nut, Fig. 85-1. Remove centering sleeve and finish tightening to a torque of 290-310 foot pounds.

Nozzle must now be tested and pressure set by turning adjusting screw down to increase pressure and up to lower pressure making sure lock nut is securely tightened when correct pressure is obtained.

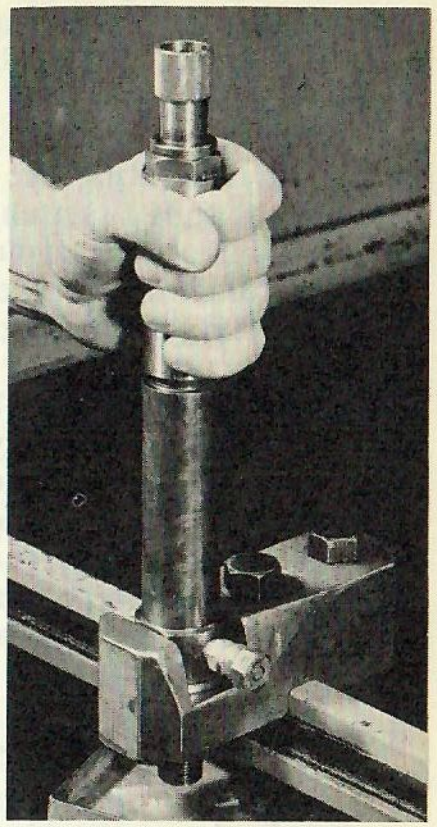

FIG. 85-1
CENTERING NOZZLE
IN CAP NUT

NOZZLE HOLDER AND TUBES

One of the worst possible engine failures can be caused by fuel leaking into the crankcase and CAUTION must be used in correctly tightening the following, and inspecting and checking for fuel leakage.

The nozzle cap nut, if not tight, will cause large amounts of fuel to leak upward onto the cylinder head where it will mix with lube oil and drain back into the crankcase. The retaining cap nut must also be tight or fuel will seep out onto cylinder head and drain back to crankcase. The fuel leak-off stud must be tight and also the nuts holding the injection and overflow tubes to the holder. Care must be also taken to see that these two nuts do not jam against the nipples when tightening the respective pipes; if they do, the nuts must be ground off.

There is only one gasket in the entire holder assembly, and this is under the leak-off connection. This connection should be tried for tightness before connecting the drain pipe.

When installing fuel tubes, care must be taken not to spring the tube to catch the nut. If the fuel tubes do not line up with their connections, they must be bent to fit. The fuel tubes must also be securely clamped to prevent any vibration or chafing.

Removing the nozzles for testing and checking once a year has proven very satisfactory on switching locomotives. When a nozzle valve sticks in the nozzle, this can be detected by smoky exhaust and engine pounding. The defective nozzle can be located by cutting out cylinders in rotation and when the nozzle is isolated, it should be changed as soon as possible.

FUEL INJECTION NOZZLE GASKET

A gasket .040" thick is used between the injection nozzle holder and the cylinder head. This gasket varies in thickness on different makes of engines and it is very important that only the gasket recommended by this company be used. If this gasket is too thick, the injection nozzle is raised and the spray will strike the cylinder head interfering with proper fuel injection, causing poor combustion.

When removing an injection nozzle holder for inspection or for replacement, the gasket should also be removed for inspection and as a guard against inserting a second gasket on top of the original, which in effect would be the same as using a thick gasket.

NOZZLE INSTALLATION

1. Clean nozzle hole in cylinder head with special cleaning tool making sure the former nozzle gasket has been removed.

2. Apply new gasket over nozzle body. A little grease on the gasket will help keep it in place when applying the nozzle to the cylinder head.
3. Apply retaining clamp, hex nuts and tighten.
4. Apply and tighten the fuel oil high pressure and drain lines.

NOZZLE IDENTIFICATION

Name of Part	Identification No.	Engine HP
Nozzle	DL-140-U-271	600 and 660
Nozzle	DL-155-U-390	900 and 1000
Holder	AKB-200-U-54	600, 660 900 and 1000

All nozzle numbers ending in 271 are for 600 and 660 HP engines. All nozzle numbers ending in 390 are for 900 and 1000 HP engines. These numbers are found on the nozzle body.

CAMSHAFT

DESCRIPTION

The main camshaft, Fig. 86-1, located in the lower part of the pushrod housing is composed of three sections

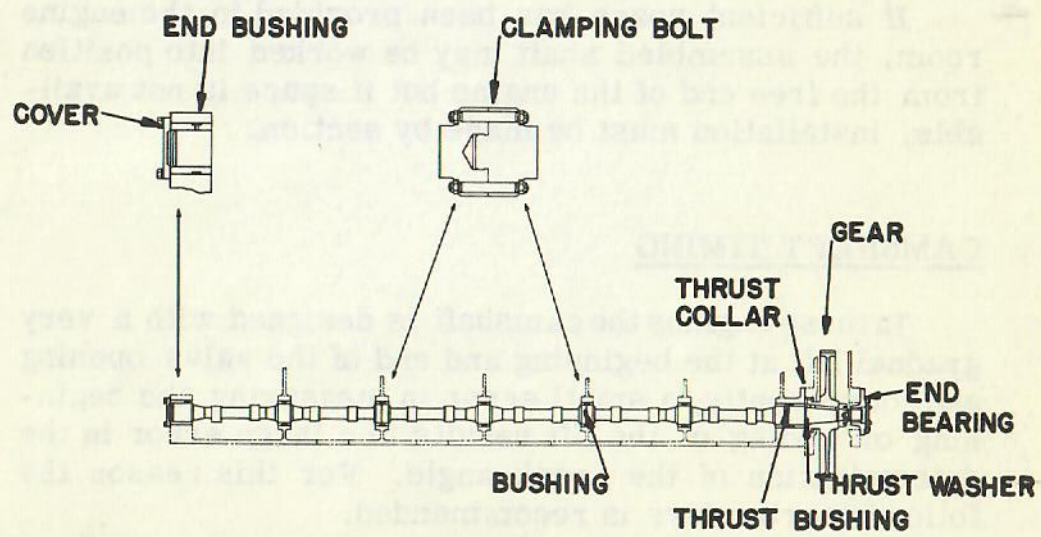

FIG. 86-1
CAMSHAFT

which are bolted together in male and female joints. The coupling bolts are installed with reamed fits and the mated flanges form bearing journals 3 and 5 respectively.

Babbitt lined bronze bushings located in the transverse frames of the pushrod housing, plus a bronze bushing fitted in the main gear casing, support the shaft which extends the entire length of the engine.

Each section of the shaft carries integral cams which actuate the inlet and exhaust valves by means of the lifter bracket, pushrod and rocker-shaft assemblies.

Longitudinal movement of the shaft is limited by the thrust bushing which, provided with thrust collars in halves, is located in frame at the drive end.

The camshaft gear, located in the main gear train, is installed on the shaft with a tapered fit. It is held in place by a heavy key and the camshaft gear nut. The nut is prevented from backing off the shaft by a large steel cotter pin. The gear is interchangeable with the fuel pump drive shaft gear. A timing mark is stamped on each gear.

If sufficient space has been provided in the engine room, the assembled shaft may be worked into position from the free end of the engine but if space is not available, installation must be made by section.

CAMSHAFT TIMING

In these engines the camshaft is designed with a very gradual lift at the beginning and end of the valve opening and consequently, a small error in measuring the beginning or ending of the lift results in a large error in the determination of the crank angle. For this reason the following procedure is recommended.

Remove the pushrods of No. 1 cylinder. In the push-

rod lifter of the air cam, insert a 1/4" - 20" capscrew into the threads provided in the hardened bushing in which the pushrod ordinarily rests. Make sure that the pushrod lifter is free and that the roller is riding on the base circle of the cam -- in other words, at a point diametrically opposite the peak of the cam. Adjust a dial indicator, with its pointer on the head of the capscrew previously described, at zero while the roller is on the cam base circle.

Bar the engine over in the normal direction of rotation until the dial indicator reads .187 inch lift. If the reading of .187 inch is passed, the shaft should be backed off at least 45 degrees and brought up to the reading of .187 inches again which will eliminate the effect of backlash in the gear train. This should give a crank setting of 26.5 degrees after top center on the 660 HP engine and 39 degrees before top center on the 1000 HP engine. This measurement can be made by means of a protractor placed on one side of the No. 1 crank web after adjusting the protractor for engine level.

The exhaust cam of the No. 1 cylinder is treated in exactly the same manner. The protractor reading will be 4.5 degrees before bottom center on the 660 HP engine and 6 degrees before bottom center on the 1000 HP engine. This should establish that the camshaft is properly timed. However, checking of other cylinders in a similar manner may be done to further satisfy the maintainer and to check the possibility of cam wear which might throw off the valve timing. All the other cylinders should give the same reading with respectoto their crank angle as the air and exhaust cams of No. 1 cylinder.

Remove the capscrews from the pushrod lifters and reinsert the pushrods.

Figure 87-1 illustrates the valve timing on the 660 HP engine and Fig. 88-1 illustrates the valve timing on the 1000 HP engine.

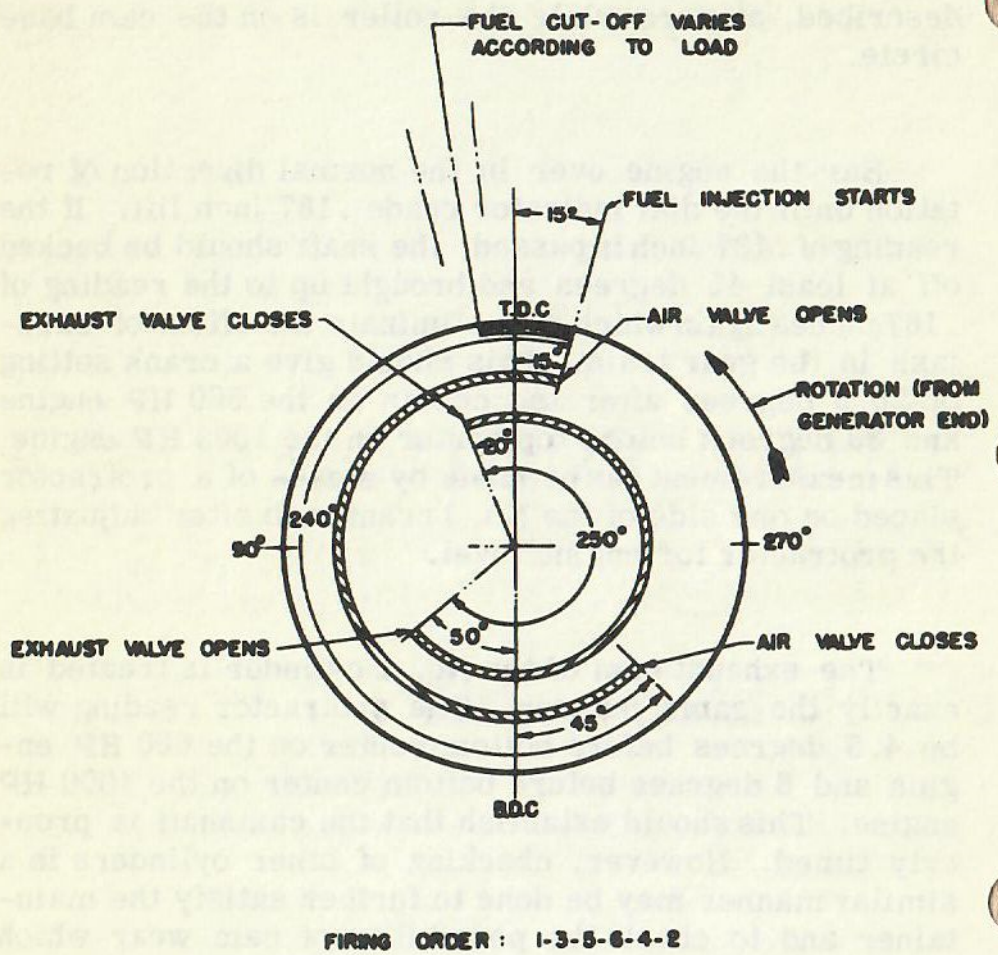

FIG. 87-1
VALVE TIMING - 660 HP

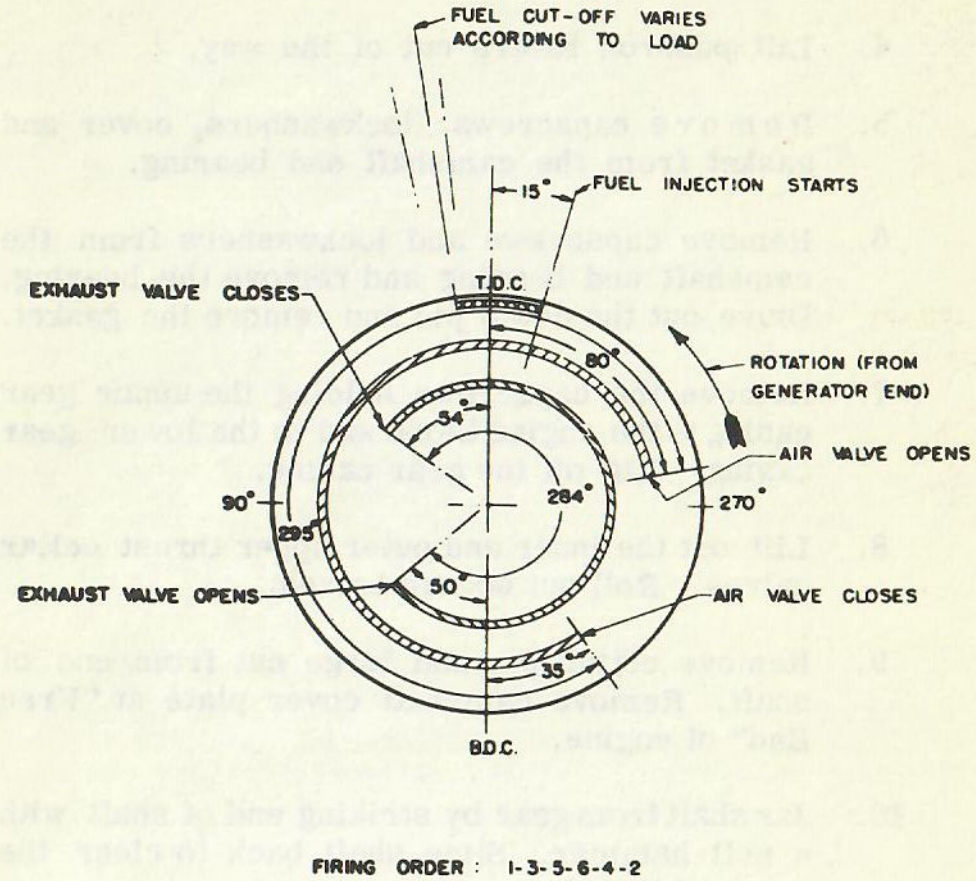

FIG. 88-1
VALVE TIMING - 1000 HP

CAMSHAFT REMOVAL

1. Remove cylinder block covers.

2. Remove valve lever casings.

3. Remove pushrods.

4. Lift pushrod lifters out of the way.

5. Remove capscrews, lockwashers, cover and gasket from the camshaft end bearing.

6. Remove capscrews and lockwashers from the camshaft and bearing and remove the bearing. Drive out the dowel pin and remove the gasket.

7. Remove the capscrews holding the upper gear casing to the engine block and to the lower gear casing. Lift off the gear casing.

8. Lift out the inner and outer upper thrust collar halves. Roll out bottom halves.

9. Remove cotter pin and large nut from end of shaft. Remove camshaft cover plate at "Free End" of engine.

10. Jar shaft from gear by striking end of shaft with a soft hammer. Slide shaft back to clear the gear. Lift out gear.

11. Slide shaft out through "Free End" of engine.

CAMSHAFT DISASSEMBLY

1. Remove castle nuts and bolts which join the three sections.

2. At each joint there are scribe marks so that the sections may be reassembled in their proper location. Detach the sections.

CAMSHAFT INSPECTION AND MAINTENANCE

Thrust Washers

Measure thickness of thrust washers. The thickness of the inner washer is .427 to .428 inches; the outer washer is .495 to .497 inches new. If the total wear of the inner and outer washers exceeds .010 inches, it is advisable to renew the washers. Inspect surfaces and renew washers if necessary.

Camshaft Gear

Examine the gear for wear, pits or grooves on the teeth surfaces and for cracks or parts of teeth broken out. If magnaflux equipment is available check gear teeth by this means.

Camshaft

Examine cams of camshaft for cracks, grooves and score marks. Shallow score marks may be stoned, otherwise the camshaft must be replaced. The sections of the camshaft are made independently but the journals are ground together.

Camshaft Bearings

The seven camshaft bearings are babbitt lined. Examine for pitting, shelling and wear. Bearings with slight pit marks may be reused but if failure has progressed to any extent, they should be renewed. When applying new bearings in the cylinder block with the oil groove at the top. The end of the thrust bearing should be flush with the end of the block.

CAMSHAFT REASSEMBLY

1. Align scribe marks at section joints and bolt sections together.

CAMSHAFT INSTALLATION

1. Slide shaft in through the "Free End" of the engine.

2. Drop the gear into place and mesh it with the idler gear so that the single mark on the camshaft gear is between the double mark on the idler gear. Work the camshaft, with the gear key installed, into the camshaft gear. Start nut on shaft.

3. Roll in the inner and outer lower thrust collar with the babbitt faces against the gear hub.

4. Secure the gear in position on the shaft by tightening the gear nut. Apply cotter pin.

5. Set inner and outer upper thrust collars in place. Lower gear casing into place making certain that the thrust collar dowels have entered the holes in the gear casing.

6. Enter gear casing dowels and tighten casing to the block and lower casing.

7. Apply camshaft end bearing.

8. Position pushrod lifters, apply pushrods and valve lever casing.

GEAR TRAIN

DESCRIPTION

The gear train is driven by a two-piece steel gear held in place on the crankshaft by ream bolts and saddles. The steel idler gear is a single gear mounted on a removable bearing pin set in the lower casing. The fuel pump drive and camshaft gears, driven by the idler, are interchangeable; both are fitted to the shafts by taper

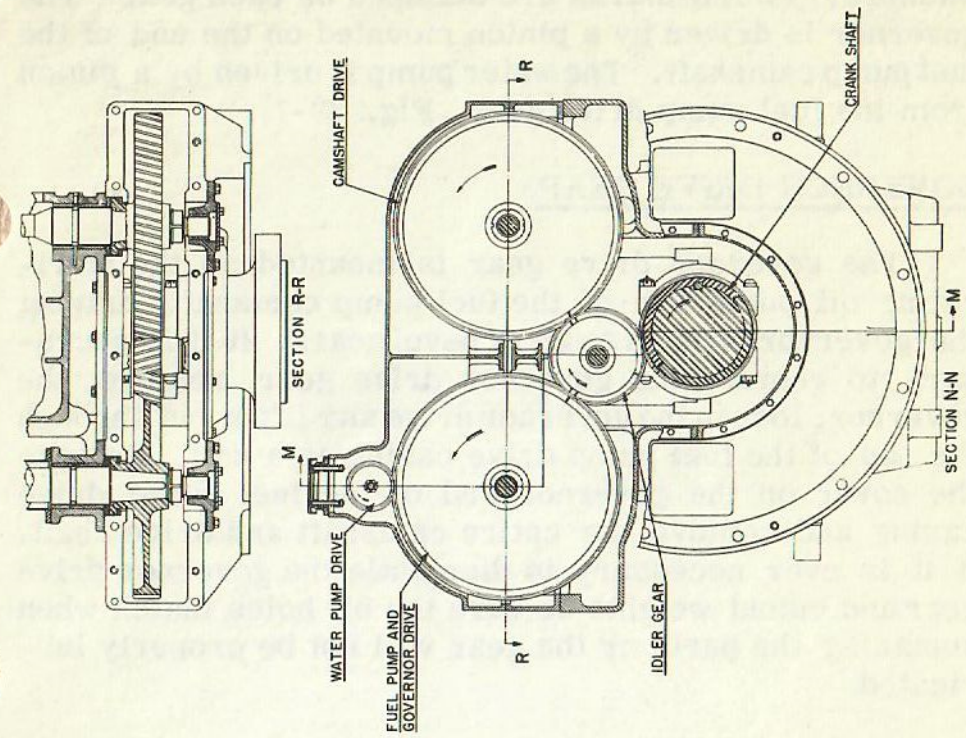

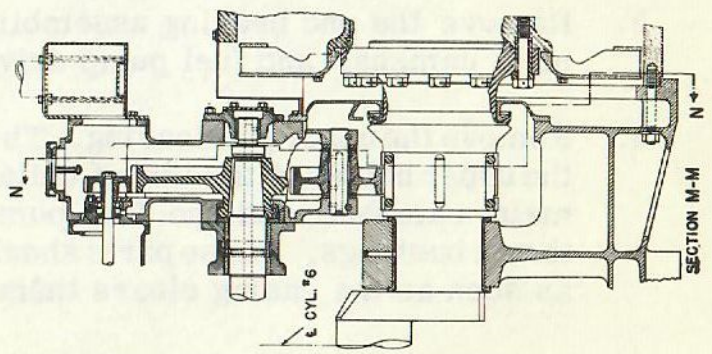

FIG. 89-1
GEAR TRAIN

fits and keys, being held in place by ring nuts and lockwashers. Timing marks are stamped on each gear. The governor is driven by a pinion mounted on the end of the fuel pump camshaft. The water pump is driven by a pinion from the fuel pump drive gear, Fig. 89-1.

GOVERNCR DRIVE GEAR

The governor drive gear is mounted on the lubricating oil pump end of the fuel pump camshaft, driving the governor through s pair of bevel gears. If it is necessary to remove the governor drive gear, remove the governor, loosen the governor drive and lift it out through the top of the fuel pump drive casing as a unit. Remove the cover on the governor end of the fuel pump drive casing and remove the entire camshaft and drive shaft. If it is ever necessary to dismantle the governor drive gear and cutout weights be sure the oil holes match when replacing the parts or the gear will not be properly lubricated.

FUEL PUMP DRIVE SHAFT GEAR

Removal

1. Remove water pump.

2. Remove the end bearing assemblies of both the main camshaft and fuel pump drive shaft.

3. Remove the upper gear casing. This will expose the upper halves of the thrust collars of both the main camshaft and the fuel pump drive shaft thrust bushings. These parts should be removed as soon as the casing clears them.

4. Remove the governor assembly.

5. Remove the governor drive assembly.

6. Remove the camshaft end cover on the fuel pump drive casing.

7. Trip the overspeed trip handle and bar the engine over until all cutout pins are in. This will lock the fuel pump crossheads in cutout position.

8. Remove the cotter pin and gear nut on the fuel pump drive shaft and with a soft hammer drive the shaft from the gear. Remove the gear from the engine.

9. Remove the lower halves of the thrust collars of the fuel pump drive shaft thrust bushing.

CAMSHAFT GEAR

Removal

Refer to "Camshaft Removal".

IDLER GEAR

Removal - By Removing Center Gear Case

1. Remove the water pump, end bearings, upper gear casing, fuel pump gear and camshaft gear.

2. Disconnect the lubricating oil supply line from the idler gear bracket.

3. Remove the lower gear casing dowels and bolts.

4. Lift the lower gear casing assembly which includes the idler gear from the engine.

5. The idler gear can be removed from the lower gear casing by removing the clamp bolts and driving the pin from the bracket.

Replacing - Without Removing Center Gear Case

The idler gear may be replaced without removing the lower gear casing.

1. Bar the engine over until the single timing mark on the idler gear meshes with the double mark on the crankshaft gear and the single marks on the two camshaft gears are within several teeth of meshing with the double marks on the idler gear.

2. Remove fuel pump drive shaft gear.

3. Remove perforated cover between generator and gear casing.

4. Remove generator fan sections, if used.

5. Remove the top half of the oil catcher sealing the generator end of the crankcase.

6. Remove one of the vent covers on the side of the base.

7. Through these openings remove the ream bolts holding the idler gear shaft to the lower gear casing.

8. Slide the shaft out of the idler gear but be careful not to lose the thrust washers, one at each side of the gear. As the shaft moves out these washers may be collected as they are released.

9. Block camshaft gear to prevent it from turning.

10. Bar engine over slowly in the direction of rotation to unmesh the idler gear.

11. Lift out idler gear.

12. Start the replacement idler gear with the timing mark in line with the mark on the crankshaft gear, then bar the engine in the reverse rotation until the gear is in place. Count the number of tooth spaces on the camshaft and idler gear from the mesh point to see if they will come together. If they will not, the camshaft gear has moved and it will be necessary to turn it to a position where the markings on the camshaft and idler gear will come together.

13. Reassemble the idler gear to its shaft with a total end clearance between one of the thrust washers and the face of one of the idler gear bushings of .012 to .030 inches.

14. Bar the engine over until the piston nearest the gear train is on top dead center on the compression stroke. The timing marks on the camshaft gear and the idler gear should come in line.

15. Reassemble the fuel pump drive shaft gear with its timing mark in line with the one on the idler gear.

GEAR TEETH INSPECTION

Pitting

Gears should be scrapped when the working surface of the teeth is severely damaged by pitting or spalling to the degree shown in Fig. 90-1. Light pitting, as illustrated in Fig. 91-1 is a common condition and need not cause undue alarm.

Scuffing

Light scuffing, shown in Fig. 92-1, and characterized by the vertical root-to-tip lines, is an indication of a lack of lubrication, which if not corrected, may result in ultimate destruction of the teeth. The heat generated during this operation may cause damage to the bearings.

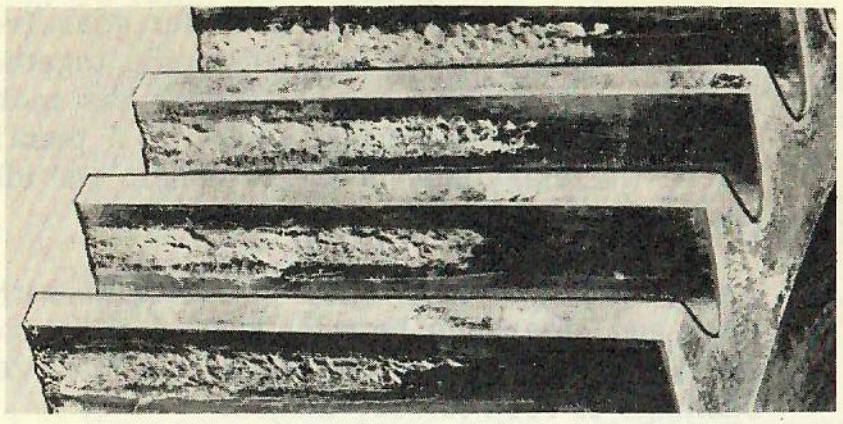

FIG. 90-1
GEAR TEETH SEVERELY DAMAGED
BY PITTING AND SPALLING

Fatigue Breakage

Gears with broken teeth should be scrapped. See Fig. 93-1. Fatigue cracks discovered by visual, magnaflux or other means, as illustrated in Fig. 94-1, are indications that failure is beginning. When cracks, such as illustrated, have progressed to the end and around the corner of the tooth, the gear or pinion should be scrapped.

REASSEMBLY AND TIMING OF GEARS

1. Rotate the crankshaft until the double marks on the crankshaft gear are at top center.

2. Install the lower gear casing and idler gear assembly and mesh the single mark on the idler gear with the double mark on the crankshaft gear.

3. Turn the crankshaft until No. 6 crank is at top

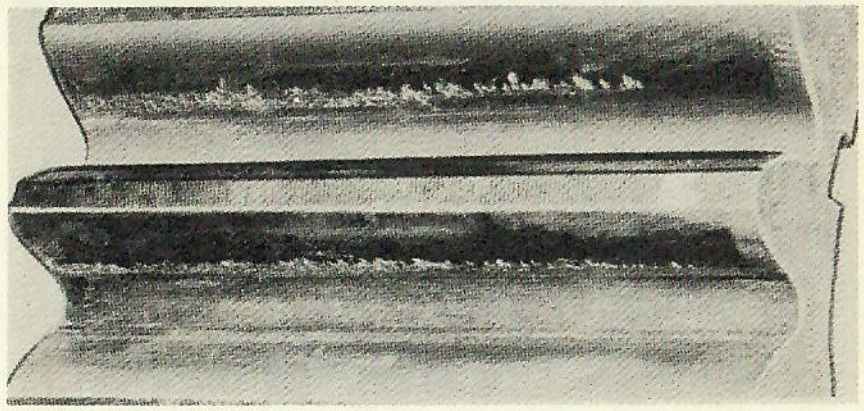

FIG. 91-1
LIGHT PITTING AT BASE
OF GEAR TOOTH

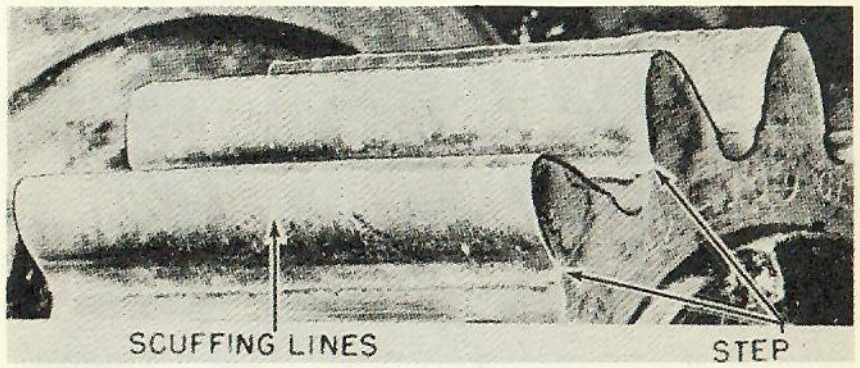

FIG. 92-1
WORN GEAR SHOWING
STEP AND SCUFFING LINES ON TEETH

center, at which point the respective pairs of double marks on the idler gear are in position to be mated with the single marks provided on the main camshaft and fuel pump drive gears.

4. Mesh the single mark on the main camshaft

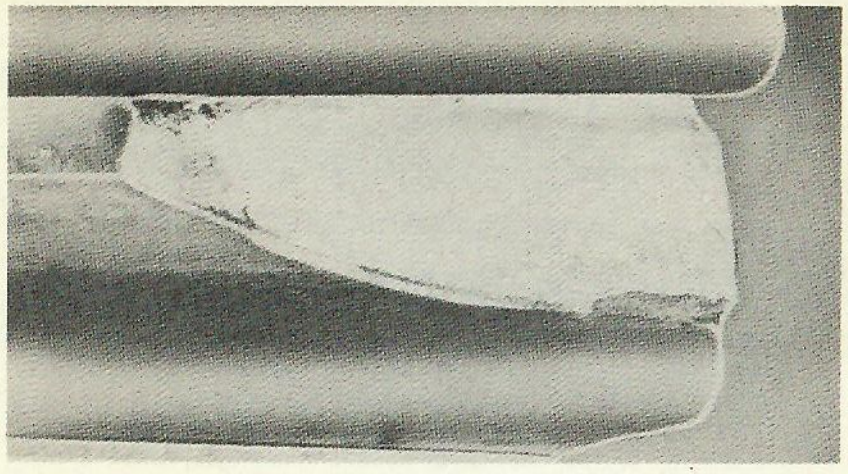

FIG. 93-1
GEAR WITH TOOTH
BROKEN OFF AT END

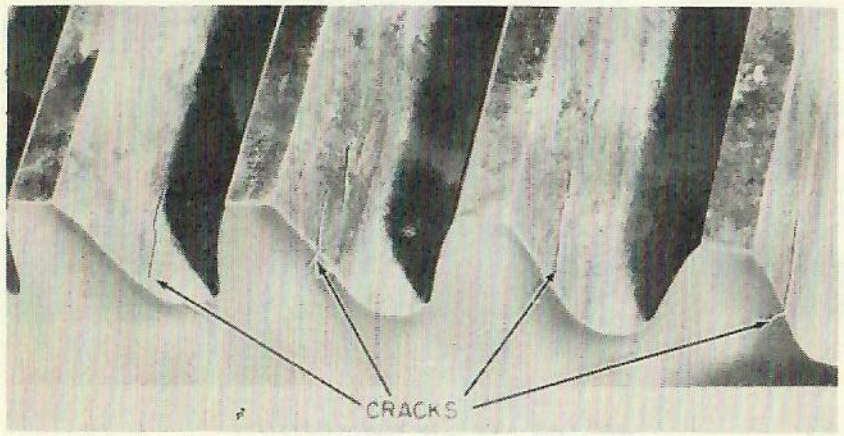

FIG. 94-1
GEAR WITH FATIGUE CRACKS
AT END OF TEETH

gear with the double mark on the idler gear and work the camshaft, with the gear key installed, into the drive gear. Apply and tighten gear nut and cotter pin.

5. Mesh the single mark on the fuel pump drive gear with the double mark on the idler gear and work the drive shaft, with the gear key installed into the drive gear. Apply and tighten gear nut and cotter pin.

6. Install lower thrust collars of the main camshaft and the fuel pump drive shaft thrust bushing.

7. Install oil catcher.

8. Install upper thrust collars of the main camshaft and the fuel pump drive shaft thrust bushing and install the upper gear casing.

9. Install the end bearings of both the main camshaft and the fuel pump drive shaft.

10. Apply cover over end of main camshaft at free end of engine.

11. Install the water pump.

12. Reinstall the governor drive assembly and the governor.

13. Release the fuel injection pump crossheads by withdrawing the cutout pins. Reset the Overspeed Trip.

14. Return the pushrod lifters to their proper location on the cams and reinstall the pushrods.

15. Apply valve lever casings.

16. Adjust valve tappet clearance for .016 inches.

17. Replace cylinder block and base doors.

Care must be taken when reassembling the gears to see that there is adequate backlash or gear clearance as shown on the Table of Clearances. Too small a clearance will cause binding of the gears and excessive wear.

All gear casings and covers are dowelled to aid in assembling.

Under no circumstance should lacquer be used to replace a gasket or vice versa.

OIL SLINGER

The slinger is made in two halves. If at any time there should be evidences of oil leaking out around the oil slinger, the condition should be immediately remedied so as to prevent oil getting on the main generator windings.

Oil leakage could be caused by either leaky joints at the slinger or by an excessive crankcase pressure condition.

If leakage appears to be resulting from excessive crankcase pressure, the crankcase vents should be checked as described in the following section and also for excessive piston blow by.

Leakage resulting from a poor fit at the slinger joints can be determined by trying a feeler gauge in the joints. If a .0015 feeler can be inserted the assembly should be dismantled and the surfaces spotted in. All joints are metal to metal fits with "osolite" or similar oil resistant lacquer and used as a sealing compound.

Access to the slinger is had by removing the generator fan and the vent covers on either side of the engine base. The assembly can then be removed in two halves.

TRACTION GENERATOR

GENERATOR REMOVAL

1. Disconnect flexible coupling to the air compressor and remove the auxiliary drive belts.

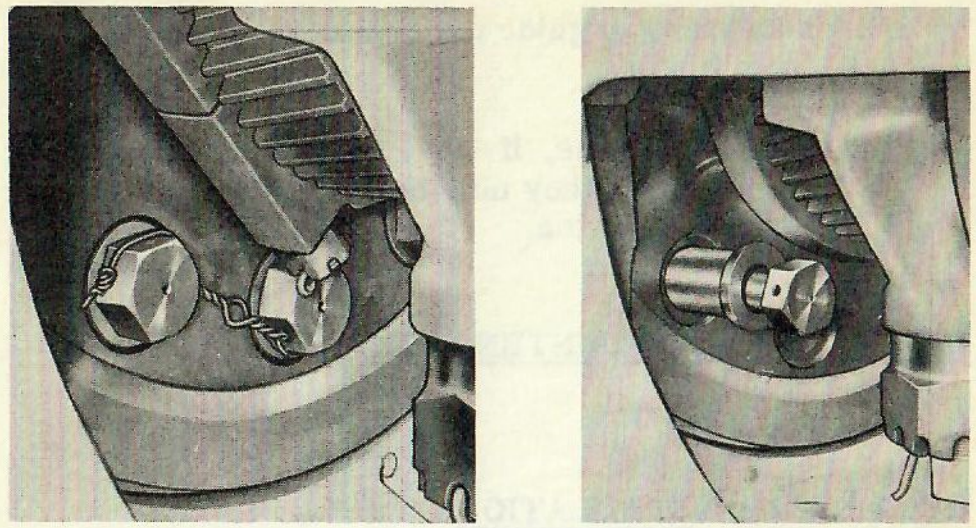

FIG. 95-1
GENERATOR CRANKSHAFT COUPLING BOLTS AND BUSHINGS

2. Remove the generator fan guards and crankcase covers.
3. Remove generator coupling bolts and bushings, Fig. 95-1.
4. Insert cardboard or similar material in the air space between the armature and field poles to prevent the armature from dropping when the generator spider flange is disengaged from the crankshaft flange, Fig. 96-1.

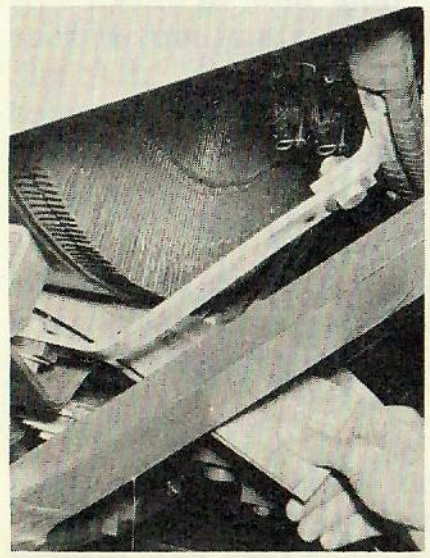

FIG. 96-1
SHIMMING ARMATURE

5. Apply lifting hoist and take up slack.
6. Remove nuts from generator studs that secure generator to the engine base.
7. Pull the generator from the engine base and crankshaft using a pry bar whenever

necessary to guide the generator and prevent it from binding.

8. Remove shims, if any, from the studs. Tag them so that they may be reapplied in their original position.

INSPECTION AND MAINTENANCE

Refer to page 901.

GENERATOR INSTALLATION

1. Engine Balancing - Counterweight Location On Generator Fan

When applying a new generator fan, generator, or reinstalling a generator, care should be taken to be sure the weight mounted on the generator fan is located in the proper position, otherwise excessive vibration will occur.

The original generator fans now in service on many locomotives were made of aluminum in four sections, one of which has a counterweight attached. On switchers and road switchers only, a welded steel section having counterweight attached was substituted for one of the four.

Still later a solid one piece steel all welded fan was substituted in a few cases for the aluminum fans with or without the one steel quarter section.

It is necessary to remove the generator from the engine in order to remove this one piece fan. The counterweights on the one piece fans are located in slightly different places than on the four section fans.

The following are the locations for the counterweight on these various type fans:

a. 660 HP Switching Locomotive

Old Style Fan with Steel Quarter Section

Place cranks Nos. 1 and 6 about 20° B.T.C. Steel fan section not at top center. Counterweight also on top center on radial center line passing through center fan holding bolt boss.

New Style Solid Fan

Place cranks Nos. 1 and 6, 15° B.T.C. Apply fan to generator armature spider with counterweight in line with same cranks, Nos. 1 and 6. Fan holding bolt boss will be on top center. This boss corresponds with boss in center of former steel quarter section.

b. 1000 HP Switching Locomotive

Old Style Fan with Steel Quarter Section

Place cranks Nos. 1 and 6 about 20° B.T.C. Steel fan section now at top center. Counterweight is now 10° ahead of radial center line of this fan quarter section.

New Style Solid Fan

Place cranks Nos. 1 and 6, 15° B.T.C. Apply fan to generator armature spider with center line of counterweight 6° A.T.C. Fan holding bolt boss is now directly on top center. This boss corresponds with boss in center of former steel quarter section.

c. 1000 HP Road Switching Locomotive

Should a one piece fan ever have to be applied to a road switcher in the field, the instructions for 1000 HP switching locomotive given above should be followed. Then, when the fan has been applied the counterweight weighing 8.34 pounds and bolted to the fan should be removed.

2. Insert cardboard or similar material in the air space between the generator armature and field poles.

3. Attach slings and slide generator onto the base studs.

4. Coat the coupling bushings lightly with white lead. Install the bushings in the holes in the crankshaft flange.

5. Move generator into engagement with the bushings and the male and female fit.

6. Apply shims as removed from the studs, place generator against the engine and tighten nuts snugly.

7. Insert coupling bolts, tighten securely and wire.

8. Remove cardboard strips from space between armature and generator poles.

9. Check crankshaft deflection.

10. Tighten generator to base nuts.

CRANKSHAFT DEFLECTION

The crankshaft deflection is taken at the No. 6 crankshaft web. A dial indicator with special attachments is positioned between the webs one-half inch above the ends and parallel to the center line of the crankpin. The indicator dial should be set at zero with the piston on top

dead center. The shaft is then rotated both clockwise and counterclockwise to limits as determined by connecting rod interference. The maximum deflection readings obtained should not exceed .002 inches.

1. Remove the filler pieces between the generator support spring and the generator pad so that the generator hangs on the engine without other support.

2. Take a crankshaft deflection reading and if the deflection exceeds the allowable limit correction is made by inserting shims between the generator and engine base in this manner:

   a. On a 1000 HP engine, for a .001 inch change in deflection, apply .010 inch shims on the bottom studs, .006 inch on the next higher studs and .002 inch shims on the third higher studs.

   b. On a 660 HP engine, for a .001 inch change in deflection, apply .012 inch shims on the bottom studs, .008 on the next higher studs and .004 on the third higher studs.

   c. The generator to base stud nuts will have to be loosened each time a shim change is made and retightened before taking a deflection reading.

   When applying shims make sure that there is a .004 inch difference in the thickness of shims on each succeeding higher stud.

3. On the top plate of the generator support spring arrangement is a 5/16 inch shim. Measure the distance between the floor and the bottom of the generator pad. If this distance is greater than five and one-half inches, add one sixteenth inch shim to the 5/16 inch shim for every 1/16 inch over 5-1/2 inches. If the distance is less than 5-1/2 inches, remove 1/16 inch from the 5/16 inch shim for every 1/16 inch less than 5-1/2 inches.

EXPLOSION COVER

DESCRIPTION

An explosion cover is attached to the top of the gear case to protect the base from damage. In case of a crankcase explosion the spring loaded cover will lift and relieve the pressure in the crankcase.

COVER REMOVAL

Remove the capscrews and lift off the cover assembly.

COVER INSPECTION AND MAINTENANCE

Inspect for broken springs and renew the two cover gaskets.

COVER INSTALLATION

Set assembly on gear case and bolt in place with capscrews.

CRANKCASE BREATHER AND OIL TRAP

On the 1000 HP engines a crankcase breather and oil trap is mounted on the gear case and connects the gear case to the turbocharger. Since the air drawn from the gear case by the turbocharger intake is saturated with oil vapor a screen type oil separator is used to trap the oil vapor in this line.

The oil trap screen should be removed and cleaned.

ENGINE INSTALLATION

1. Clean the floor thoroughly around the foundation studs. Use buffing wheel and wipe clean with rags.

2. Clean the underside of the engine base mounting flange using a buffing wheel and wiping clean with rags.

3. Place shim stock at three points on the floor so that when the engine is lowered, three corners of the engine base will contact the three pieces of shim stock. The shim stock should be thick enough to prevent any part of the base from contacting the floor.

4. Measure the clearance between the floor and the base at each foundation stud. Record these measurements with chalk at each point. Cut shim stock to the size of each measurement and drill a 1-1/2 inch hole through the center.

5. Measure the distance between the floor and the bottom of the generator pad. On the top plate of the generator support spring arrangement is a 5/16 inch shim. If the distance is greater than 5-1/2 inches add a 1/16 inch shim for every 1/16 inch over 5-1/2 inches; if the distance is less than 5-1/2 inches, remove 1/16 inch from the 5/16 inch shim for every 1/16 inch less than 5-1/2 inches.

6. Lift the engine, place the shims over the studs and place the generator support spring assembly in place with the proper amount of shim stock.

7. Leaving the original three shims in place, lower the engine into place.

8. The original three shims and the shims at each of the studs must all be tight.

9. Apply and tighten stud nuts. Spot weld generator spring support assembly in place.

10. Connect all piping.

11. Prime lubricating oil system. Insert the suction side of either a hand operated or motor driven pump into a barrel of lubricating oil. Remove the 35 psi lube oil pressure regulating valve and connect the discharge side of the pump to the system at this point. Prime system until oil appears at the bearings, pistons and valve rocker arms.

12. Fill system with water and water treatment. Check for leaks.

ENGINE RUN-IN PROCEDURE

After a complete overhaul the engine should be run-in as follows:

1. Idle engine 1 minute, then inspect bearings.
2. Idle engine 5 minutes, then inspect bearings.
3. Idle engine 30 minutes, then inspect bearings.
4. Place the locomotive in light switching service for eight hours.
5. Place locomotive in regular service.

WATER BOX INSTRUCTIONS

These instructions are based on the use of a water box of capacity enough to absorb the output of the 660 or 1000 HP low hood type of locomotive.

PREPARATIONS

1. Idle engine 1 minute, then inspect bearings.
2. Idle engine 5 minutes, then inspect bearings.
3. Idle engine 30 minutes, then inspect bearings.

4. Disconnect cable GA to A4 at GA and tape up loose end. Do not disconnect GA to SP2 as engine will not start.
5. Disconnect cable SP2 to A2 at SP2 and tape up loose end.
6. Disconnect cables EF to CL and EF to J3 at the exciter and tape up the loose ends.
7. Open up the ground relay circuit at J3 and connect into the negative side of the generator at EF.
8. Using two 1325/24 cables or equal, connect positive side of loading apparatus through a circuit breaker to GA.
9. Using the same cable capacity connect the negative side of the loading apparatus to EF through a shunt and ammeter capable of measuring 1600 amperes for the 1000 HP locomotive and 1400 amperes for the 660 HP locomotive for measuring generator current.
10. In measuring generator voltage a voltmeter capable of measuring 1000 volts should be connected across the main generator at EF and GA.
11. It is recommended that the two wheel slip circuits be opened up at SP2 to keep high potential from the motors.
12. A 150 volt voltmeter should be connected across the main generator shunt field at GS and GSS.
13. A 100 ampere millivoltmeter and shunt should be placed in the main generator field circuit between GF and GS.
14. A 150 volt voltmeter should be connected across the auxiliary generator. Make connections at fuse 103 positive and wire 65 for negative.

15. With the above connections for a load test, the control including the ground relay will operate normally.

Load Testing

1. Inasmuch as exciter field excitation and main generator loading are based on 75 volts auxiliary generator output at the voltage regulator at both idling and full engine operation, it is advisable to have a small load while setting the voltage regulator.

2. Then the main and exciter generator should be warmed up under partial load until the resistance of the shunt field in the main generator (between GS and GSS) is about 0.8 ohms as measured by the ammeter and voltmeter in the exciter to main generator shunt field circuit.

3. The engine horsepower to the main generator (for traction) on the 660 HP locomotive should be set at 625 HP and on the 1000 HP locomotive should be set at 950 HP at 740 RPM. The fact that engine horsepower output referred to introduces generator efficiency, the engine horsepower delivered to the generator can be calculated from the following formula and curves which show the generator, generator efficiency and transfer relay characteristics.

$$\text{Engine HP Output} = \frac{E \times I}{746 \times \text{Gen. Eff.}}$$

E - Volts, Main Generator Output

I - Amps, Main Generator Current

1 HP - 746 Watts

4. Break-in engine for one hour duration at speeds and corresponding Hp as indicated on the Generator Characteristic Curves.

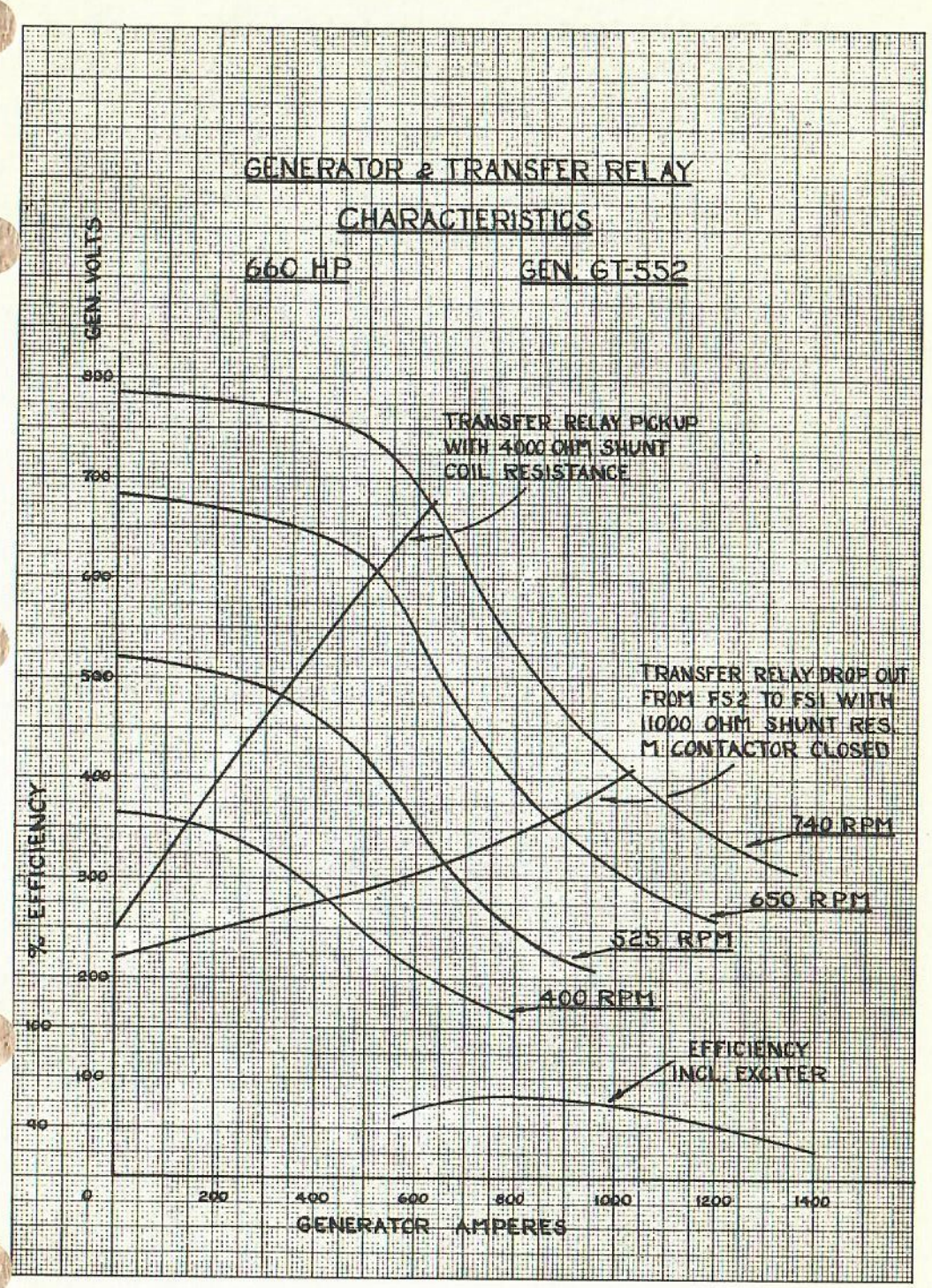

FIG. 97-1
GENERATOR AND TRANSFER RELAY
CHARACTERISTICS - 660 HP

5. For full load testing load the main generator starting in at 1400 amperes on the 660 HP locomotive, 1600 amperes on the 1000 HP locomotive. Always take generator characteristic readings starting at the high current end of the curve and proceed towards the "O" current end of the curve, Figs. 97-1 and 98-1.

6. Adjustment of the generator characteristic and output can be accomplished as follows:

If the contour of the generator characteristic does not correspond in contour shown by the curve, being too high or too low at the high current end, the correction should be made as follows:

To raise the high current portion of the curve, decrease the amount of exciter field resistance in the separately excited circuit between R6 and R7.

To lower the high current portion of the curve, increase the amount of exciter field resistance in the separately excited circuit between R6 and R7.

If the contour of the generator characteristic does not correspond in contour shown by the curve, being too high or too low at the low current end, the correction should be made as follows:

To raise the low current portion of the curve, decrease the exciter field resistance in the self excitation circuit between R5 and R6.

To lower the low current portion of the curve, increase the exciter field resistance in the self excitation circuit between R5 and R6.

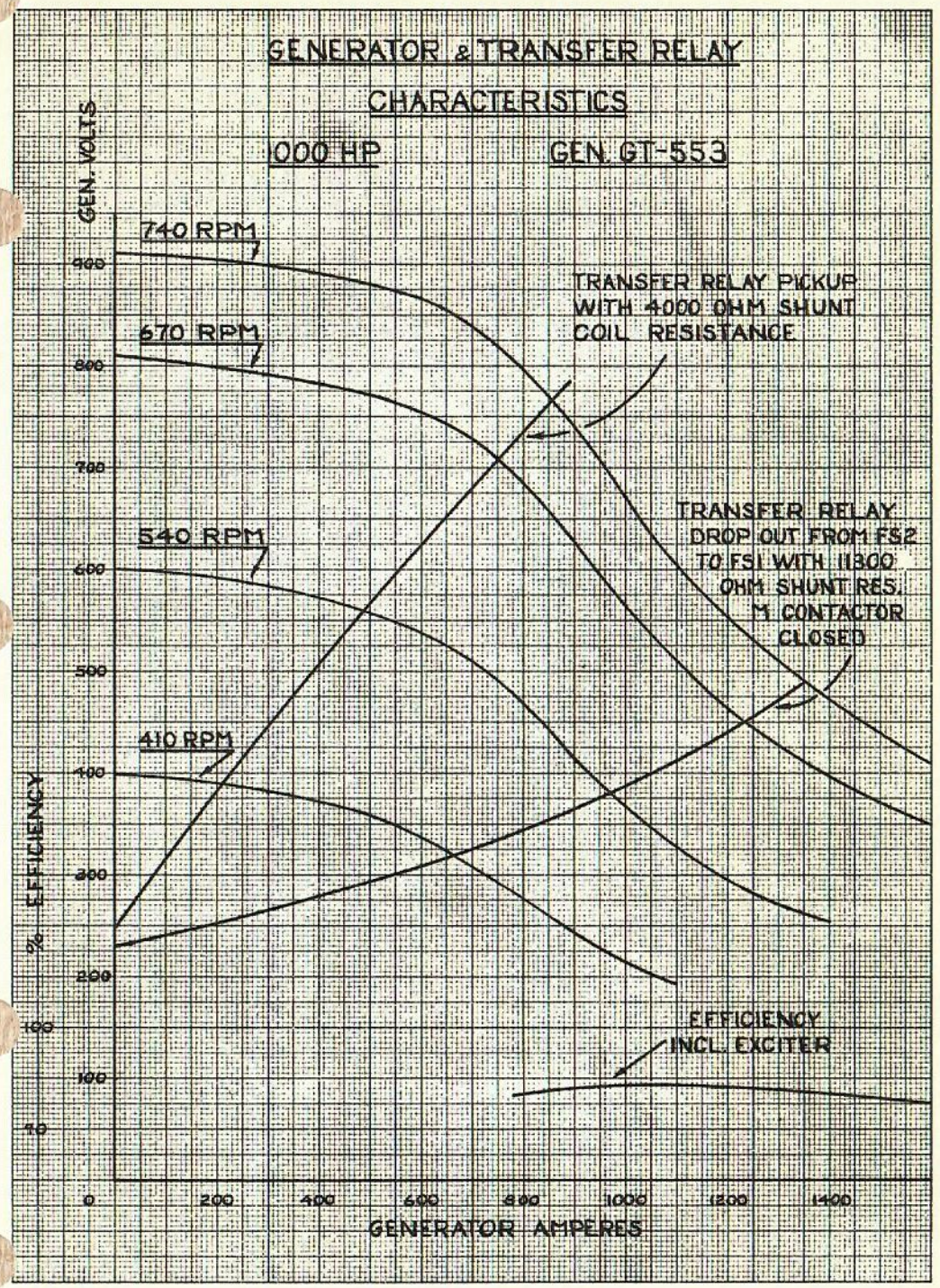

FIG. 98-1
GENERATOR AND TRANSFER RELAY
CHARACTERISTICS - 1000 HP

The loadings should be as follows:

1000 HP locomotive - 960 Engine HP for traction at 22-1/2 mm rack travel and 740 RPM.

660 HP locomotive - 625 Engine HP for traction at 24 mm rack travel and 740 RPM.

7. To check the transfer relay operation, adjust the loading device to obtain high current on the generator curve. Reduce the current slowly and note when transfer from series to series-parallel and series-parallel to shunt field takes place by watching the transfer relay (V relay) or the sudden kicking back of the voltmeter and ammeter needles. Refer to the relay pickup and drop out curves for points of operation. Adjustments are made by changing resistance at VR7.

The controller should be placed in the shunt field position or the series holding switch in ON position.

3

FUEL OIL SYSTEM

DESCRIPTION

The fuel tank is located beneath the cab floor and an additional fuel tank is provided under the underframe on the Road Switcher provided the locomotive is not equipped with a boiler. A fuel booster pump draws fuel oil from the tank and then distributes it throughout the system.

The suction side of the system is between the tank and the booster pump. Oil must pass through the emergency fuel cutoff valve and the fuel oil suction filter before reaching the booster pump.

The pressure side of the system is between the booster pump and the pressure regulating valve which discharges excess oil back to the tank. As the fuel is discharged from the pump, the pressure is regulated by a valve which is set to maintain 35 to 40 psi. Oil from the pump first passes by a pressure relief valve set at 75 psi, which protects the booster pump, motor and system from overload. Oil then passes through two Cuno type strainers and one felt type filter, which are housed in a single casing, to the fuel inlet manifold where the individual injection pumps deliver the fuel to the injection nozzles.

On some locomotives this filter assembly has been eliminated and a throwaway paper type substituted. The pressure regulating valve is located in the fuel return line from the manifold to the tank. Ahead of this valve is the line connecting to the fuel oil pressure gauge on the control stand gauge panel.

EMERGENCY FUEL CUTOFF VALVE

The emergency fuel cutoff valve, Fig. 1-3, furnishes a means of shutting off the flow of fuel from the tank to the Diesel engine in case of emergency. This valve is located in the suction line near the booster pump in the contactor compartment on the 660 and 1000 HP Standard Switcher and at the lower tank on the Road Switcher.

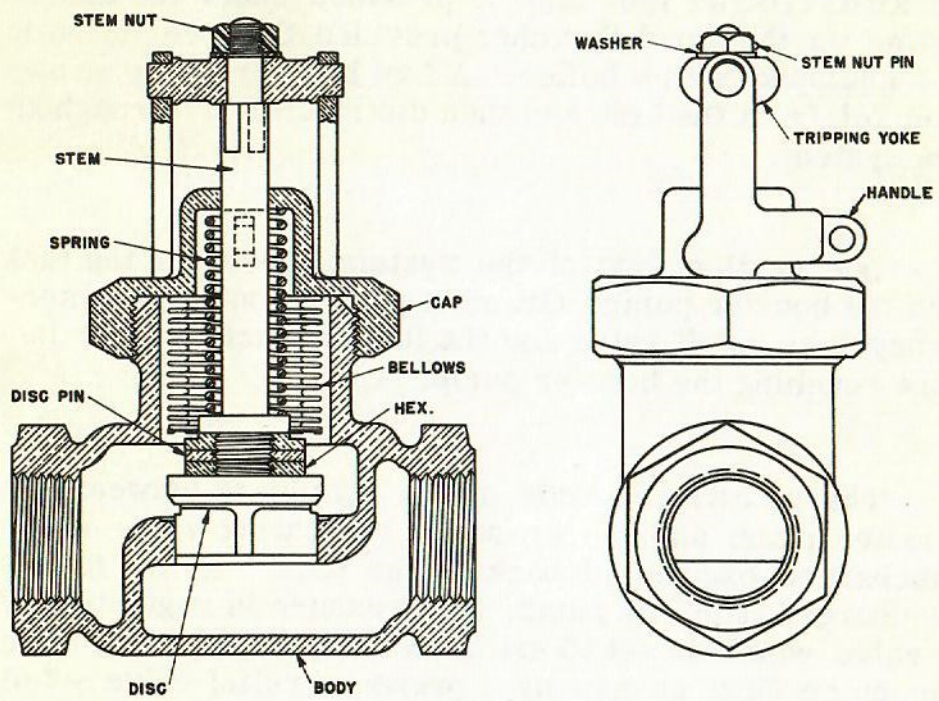

FIG. 1-3
EMERGENCY FUEL CUTOFF VALVE

It can be closed on the 660 and 1000 HP locomotive by pulling the red knob at the engineer's position or at the right side of the locomotive above the center of the rear truck. On the 1000 HP Road Switcher it can be closed at the engineer's position or at either side above the center of the rear truck.

When the valve is tripped (closed), the fuel pressure gauge should indicate zero pounds pressure. Reset by pulling up on the valve stem and reset the crutch which holds the valve open.

FUEL TANK FILLING

A tubular sight gauge glass and a plate marked with approximate gallons is provided on the back, right side of the tank on the 660 and 1000 HP Standard Switchers to permit observation of the fuel level when filling and also for periodic checks of the amount of fuel in the tank during operation. Fig. 2-3.

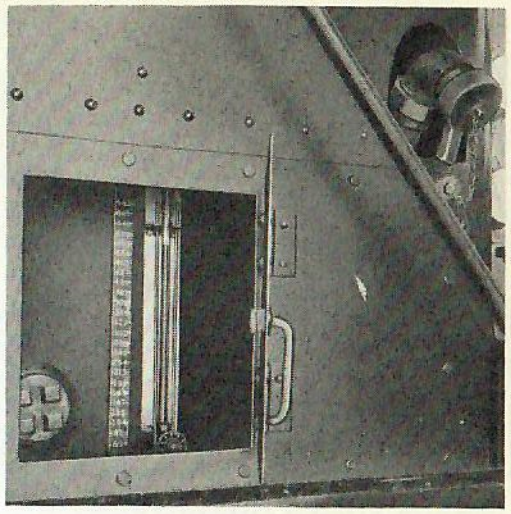

FIG. 2-3
FUEL OIL LEVEL GAUGE

The filling connection is located near the gauge glass. The Road Switchers have fuel level gauges on the right and left side of the fuel tanks and also remote reading fuel gauges located in the operating cabs.

FUEL TANK DRAINING

The fuel tank is equipped with drain plugs for clean-out purposes and a condensation drain valve leading from a well type sump located under the tank. This sump should be drained periodically and particularly if there is any evidence of water or sludge in the fuel.

In the event water is found in the fuel, the wayside fuel oil supply tank and the engine filtering system should be carefully checked immediately as water causes extensive damage to the injection equipment.

DUPLEX FUEL FILTER

The duplex fuel filter, Fig. 3-3, located in the suc-

tion line to the booster pump, consists of two filtering elements each containing one pound of filtering material on the Road Switcher locomotive and six ounces on the 660 HP and 1000 HP Standard Switcher locomotives.

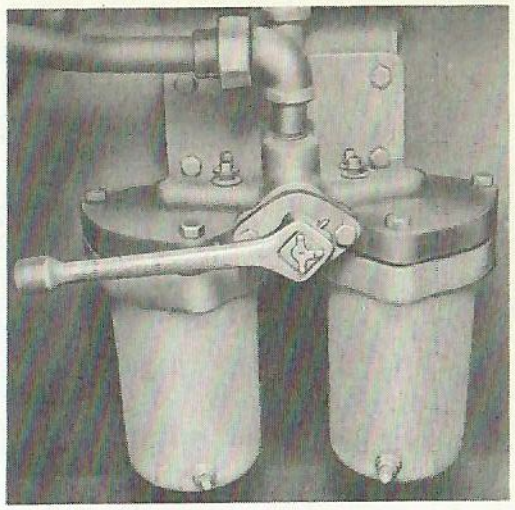

FIG. 3-3
DUPLEX FUEL FILTER

The filter handle controls the flow of fuel through either one of the two elements or both. With the handle in a horizontal position, one element is in use; with it in the vertical position, both elements are in use. Normal position for the handle is horizontal. With the handle in a 45 degree position, no fuel will flow through the filter.

If there is a gradual drop in fuel pressure, the indication is that the element in use is plugging and the handle should be moved to the opposite horizontal position. The dirty element may be repacked with the engine running.

FUEL FILTER AND STRAINER ASSEMBLY

The fuel oil filter on the engine, located in the discharge lines from the booster pump, is a combination of two Cuno strainers and one felt type filter, Fig. 4-3. The oil is passed through the Cuno strainers where most of the impurities are removed. To insure the removal of even finer foreign particles, the oil is then passed through the felt filter or paper filter and on to the fuel pump inlet manifold. The complete filtering unit is assembled in a single casing. The oil is passed from one unit to the other by means of passages in the casing

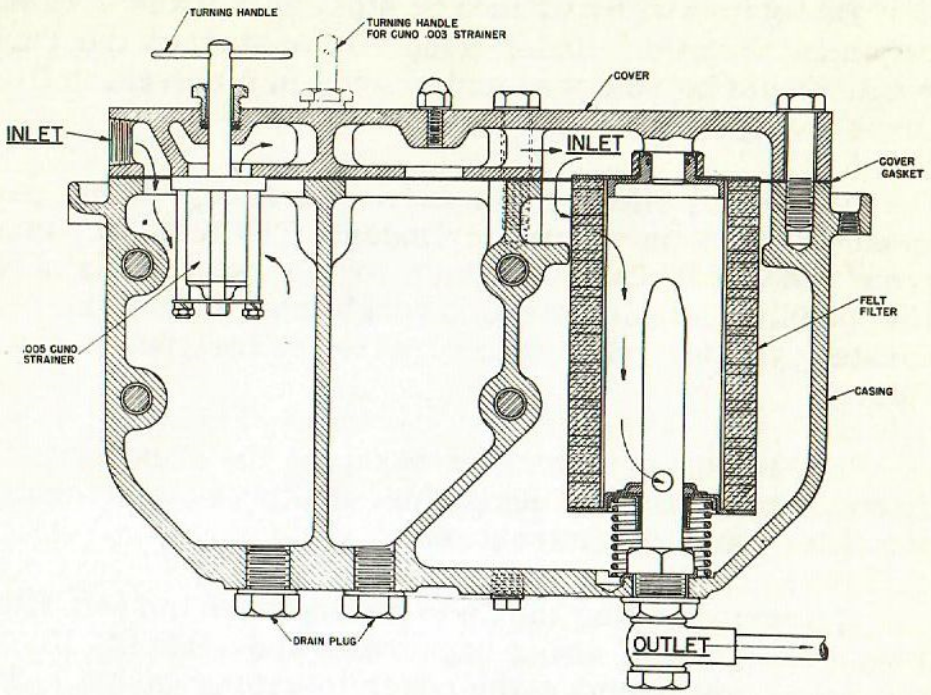

FIG. 4-3
FUEL FILTER AND STRAINER ASSEMBLY

cover. The casing forms the sump for the sludge which can be easily drained by removing the drain plugs and the 1/8" pipe plug.

The CUNO strainer cartridge consists of a stack of round, perforated discs, each separated from the other by a very thin metal spacer. The thickness of the spacer determines the fineness of filtration. The first of these two Cuno strainers has a .005" spacer while the second has a .003" spacer.

A turning handle is provided which revolves the cartridge against stationary cleaning blades. These blades extend into the cartridge through the filter slots. The handle should be turned clockwise frequently, so that the cleaning blades scrape the filter slots clean and force the sludge into the sump where it should be removed monthly.

Do not turn with a wrench or other tool if the strainer becomes plugged. Under such circumstances the cartridge should be removed and washed in a solvent until it turns freely.

The FELT filter consists of a group of felt pads mounted on a perforated cylinder. The fuel oil passes from the .003" Cuno strainer to the outer walls of the felt pads. The oil filters through the felt into the perforated cylinder, where it is piped to the fuel pump manifold.

The amount of impurities escaping the Cuno strainer cartridges is almost negligible, making replacements of the filter cartridge infrequent.

To remove either the Cuno strainers or the felt filter remove the casing cover capscrews and gaskets, lift off the cover and remove the cover to casing gasket. The Cuno strainers are attached to the cover while the felt filter remains in the casing.

To remove a Cuno strainer, loosen the gland nut, remove the packing and drive out the strainer cartridge.

To remove the felt filter, first remove the gasket at the top of the filter element and the gasket between the element and filter cover and then lift out the filter element. The spring, spring seat and spring seat gasket; the mounting stud with its nut and retaining screw and the tube for the fuel oil strainer to manifold all remain in place.

FUEL FILTER

On some locomotives the fuel filter and strainer assembly has been replaced by a single type paper element filter, Fig. 5-3. When there is a gradual drop in fuel oil pressure and it cannot be remedied by changing the handle position on the duplex fuel filter, replace the element in the single fuel filter. These elements are

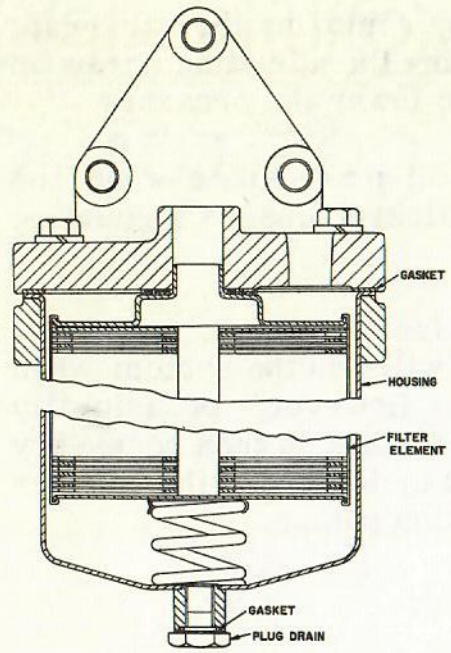

FIG. 5-3
FUEL FILTER

furnished complete with gasket and spring permanently attached.

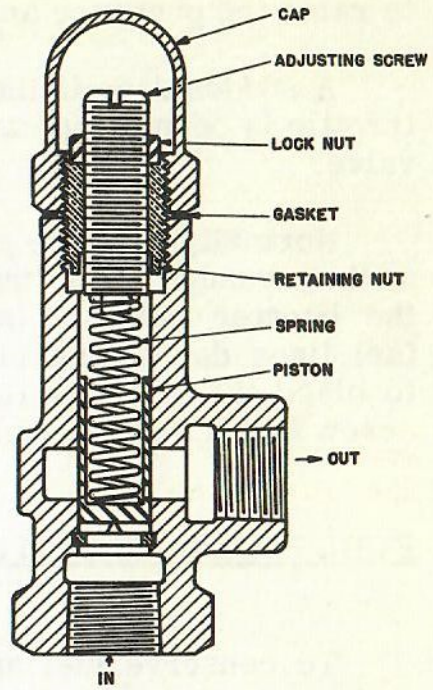

FIG. 6-3
RELIEF VALVE

FUEL BOOSTER PUMP

The fuel booster pump is a gear type pump direct driven by a 1/4 HP motor through a flexible coupling. Its function is to keep the fuel injection pumps supplied with fuel oil at all times.

RELIEF VALVES

A relief valve is located in the fuel line between the fuel booster pump and the engine filters, Fig. 6-3. The valve is set at 75 psi and normally does not function. If the filter clogs or fuel flow stoppage occurs, it protects the pump and motor against overload.

The fuel pressure is maintained by a regulating valve located in the fuel return line from the fuel manifold to the fuel tank. The valve pressure setting is 35-40 psi.

Both valves are adjusted by removing the valve cap, loosening the lock nut and turning the adjusting screw in to raise the pressure and out to lower the pressure.

A sudden drop in the fuel oil pressure when the throttle is opened indicates a sticky pressure regulating valve.

Normally no priming of the fuel system is necessary as the pressure regulating valve will vent the system when the booster pump is started. However, occasionally fuel lines do become air bound and it is then necessary to bleed the air from the lines by loosening the bleeder screw on each of the fuel injection pumps.

FUEL DRAINAGE SYSTEM

To conserve fuel and prevent dilution of the lubricating oil, the engine is equipped with a fuel drainage system.

A drain funnel is secured to the cylinder block on the fuel injection pump side. Leakage from the various units is piped to this funnel. The main drain carries it through a swing check valve to the fuel tank.

The individual units are drained as follows:

Fuel Nozzles — Oil from the nozzle leak-off connections is drained through suitable pipes to the leak-off header which is provided with three risers, each of which receives the drainage from the nozzles of two cylinders.

Fuel Filters — A lip, cast in the body of the filter to form a groove, is provided to catch any oil that may leak past the gaskets or fittings of the filter head. From this groove a tube conducts the oil to the drain funnel.

Fuel Pump Housing — Drainage from the fuel injection pumps is collected in the housing and carried to the drain funnel by the upper housing drain pipe.

HIGH PRESSURE FUEL PIPES

The high pressure fuel pipes are the lines leading from the individual injection pumps to the fuel nozzles in each cylinder head. If, due to improper tightening of the joints or other cause, a pipe should develop a leak, the cylinder with the leaky pipe should be cut immediately. If the pipe should be leaking inside the rocker box, fuel oil will be mixed with lubricating oil resulting in crankcase oil dilution. Dilution can be detected by low lube oil pressure or by an increase in the level of the crankcase oil as shown on the gauge. Crankcase oil should be drained when a maximum of 5% fuel dilution is found.

It is not allowable to operate an engine with diluted crankcase oil.

FUEL INJECTION PUMP CUTOUT

Disengage injection pump cutout pin of that cylinder from the overspeed trip rack by pulling out cutout pin and turning it. Turn the finger downward until the dog of the cutout pin falls in the slot cut in the injection pump casing, Fig. 7-3. The pin then moves in engaging the injection pump crosshead and holds the pump plunger mechanism of the injection pump drive camshaft.

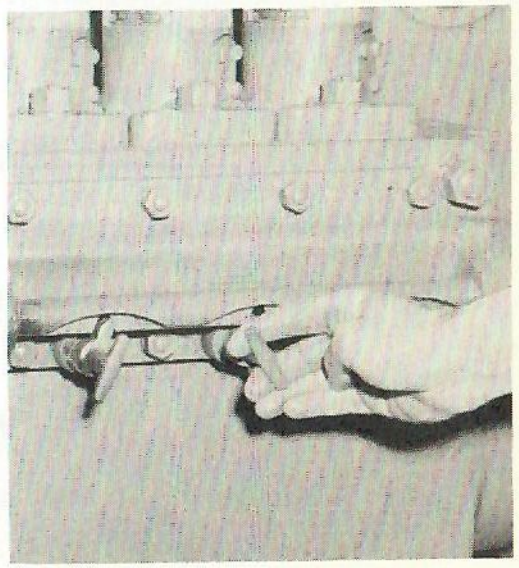

FIG. 7-3
PUMP CUTOUT

It is permissible to operate at full throttle with one cylinder cut out.

FUEL PROBLEMS

Fuel Oil Pressure Drops

1. Check fuel oil supply.
2. See that fuel pump is running.
3. See that emergency fuel cutoff valve is open.
4. Move handle of duplex filter in control compartment to opposite side to make sure filter is not clogged. Report this to maintainer.
5. Rotate handles of Cuno filters on side of engine to make sure they are not clogged.
6. Check for leaks on suction side of fuel pump.
7. If the pressure drops when the throttle is opened and comes back up when the throttle is closed, check the fuel oil pressure regulating valve and the fuel oil bypass valve for sticky cup valves.

Fuel Pump Does Not Run

1. See that fuel pump switch fuse is good.
2. See that 110 amp. fuse in control compartment is good.
3. Check fuel pump coupling.
4. Check fuel pump shaft for freedom of movement.

Hot Cylinder

If one cylinder is receiving too much fuel, its exhaust pipe elbow will be hotter than the others, may

even become red hot. Cut out this cylinder and report to maintainer. By cutting out pumps individually this can be determined by sound.

Cylinder Not Firing

The exhaust elbow of a cylinder not firing will be cooler than the others. Cut out this cylinder and report to maintainer. Check by cutting out one pump at a time to determine which cylinder is not firing.

Broken Fuel Pipe

If the fuel pipe from an injection pump to nozzle is broken, cut out that cylinder.

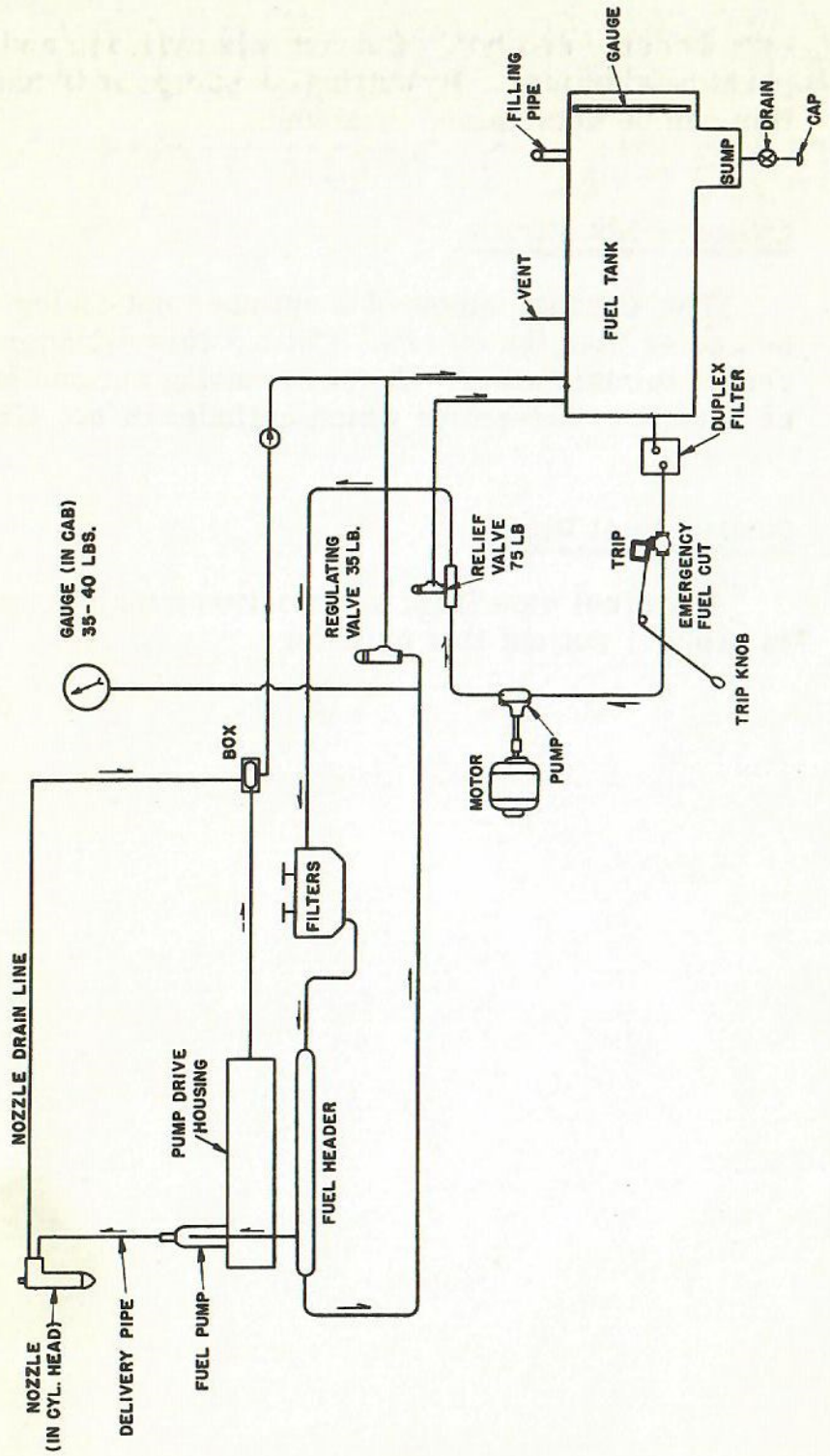

FIG. 8-3
FUEL OIL SYSTEM
660 AND 1000 HP SWITCHERS

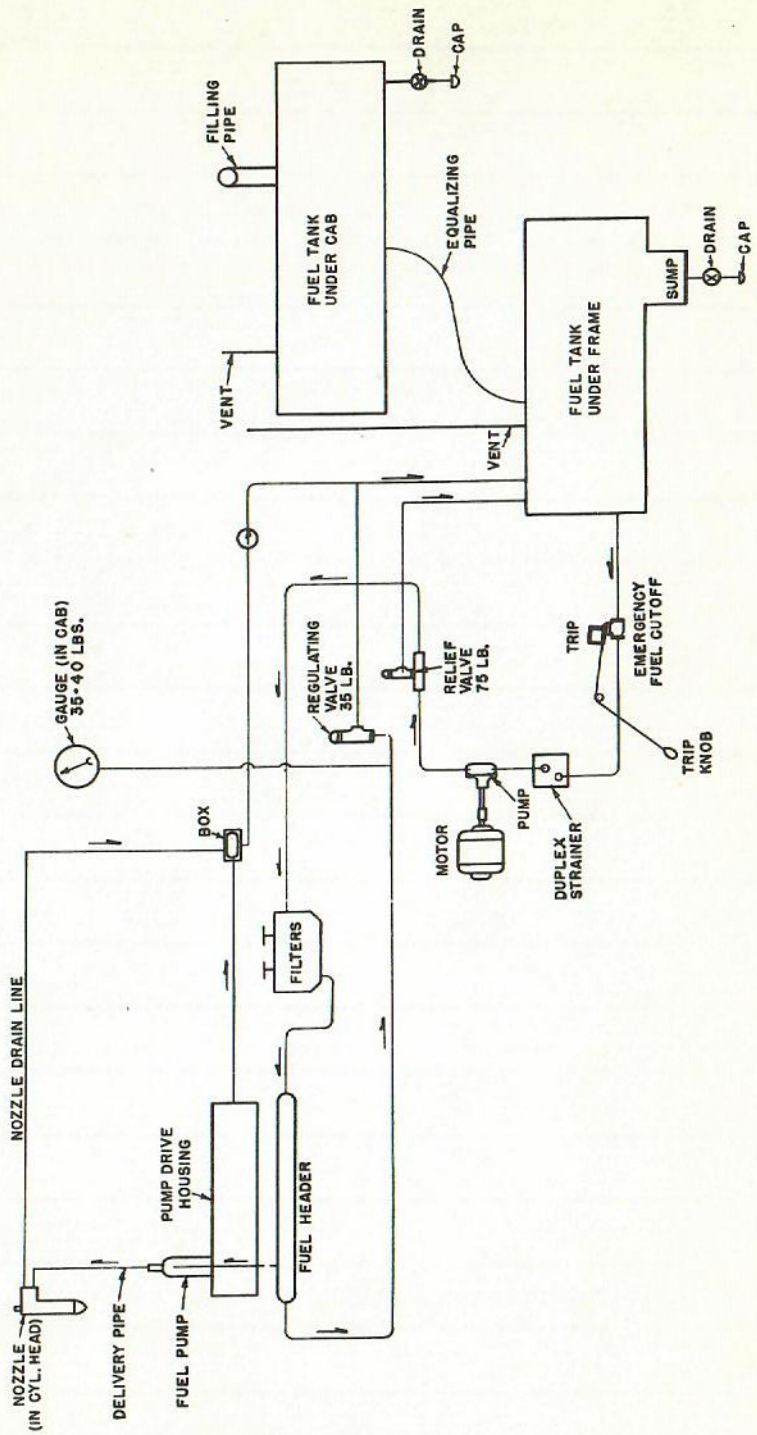

FIG. 9-3
FUEL OIL SYSTEM
1000 HP ROAD SWITCHER

NOTES

4

LUBRICATING OIL SYSTEM

DESCRIPTION

The engine is equipped with a lubricating oil pump located at the free end of the engine which is driven by the crankshaft through the lubricating oil pump drive assembly. The pump draws oil from the engine crankcase and discharges it under pressure to the oil radiators. This pressure is regulated by a pressure regulating valve mounted in the pump discharge line. Part of the oil from the radiators passes to the main oil header in the engine through Cuno filters which are contained in a common chamber in the end cover of the engine base. The rest of the oil flows through a 35 psi check valve, through one waste-packed filter on the 660 HP and 1000 HP Standard Switchers or two waste-packed filters on the 1000 HP Road Switcher and then into the oil sump of the engine base. An 18 psi differential pressure valve is located in a line connecting the radiator inlet pipe to the radiator outlet pipe. Shutoff valves are also provided in the radiator inlet and outlet pipes.

From the engine main header the different assemblies are supplied with lubricating oil through suitable connecting pipes and passages. Lubrication of the individual assemblies is described in the following under separate headings.

Main Bearings — Each of these bearings is supplied by an individual tube from the main header. These tubes have an OD of 5/8 in. and are adapted by means of SAE fittings.

Main Camshaft Bearings — With the exception of the end bearing, all bearings are individually supplied by 1/4 inch line which also supplies the Fuel Pump and Governor Drive Assembly and the Turbocharger, if the engine is turbocharged.

Lubricating Oil Pump Drive — A single 3/8 inch tube leading from the main header supplies oil to this assembly which has suitable passages for conducting the lubricating oil to the various bearing surfaces. A 1/2 inch tube at the bottom of the casing returns the drainage to the crankcase.

Valve Operating Mechanism — The valve operating mechanism of each cylinder unit is supplied by a 1/4 inch tube which provides passage from the main header to the lifter bracket. The oil flows through passages in the parts of the assembly and lubricates all bearings and bushings. Lubrication of the valve springs and guides is provided through a metering valve located on top of the exhaust valve rocker arm which sprays oil inside the rocker box.

Fuel Pump and Governor Drive Assembly — Oil is supplied through the 3/4 inch lead to the main camshaft end bearing where it passes through an annular groove to an outlet pipe which leads to a tee on the opposite side of the engine, one leg of which feeds the end bearing of the fuel pump and governor driveshaft.

Connecting Rod Assemblies — Rod bearings and piston pins are supplied with oil from the main bearings through passages in the crankshaft and connecting rod.

Main Gear Train — A 3/8 inch tube supplies the idler gear from the main header through a passage in the idler gear bracket which communicates with the annular space between the gear shaft and the gear hub and drilled passages in gear shaft. Four radially drilled holes communicating between the annular reservoir in the idler gear hub and the gear teeth, provide lubrication for the mating gears, namely, the fuel pump drive shaft gear, the main camshaft gear and the two piece crankshaft gear. An oil lead to the water pump gear is not necessary because it mates with the lubricated teeth of the fuel pump drive shaft gear.

FILLING AND DRAINING

To fill the system, any engine base door can be removed and the oil poured in through this opening. A filling hole is provided in the base at the free end of the engine for the addition of make-up oil. Never remove a base door while the engine is running as hot oil, thrown from the rotating parts, may cause personal injury and also could result in engine damage due to a crankcase explosion.

To drain the system, remove the pipe cap from the external drain pipe and open the drain valve in the external drain pipe.

A bayonet gauge, located in the base of the engine on the left side is provided with a HIGH and LOW mark to determine when oil should be added to the system. The oil should be checked daily with the level maintained between the high and low mark, preferably at the high, with the engine idling on a level track.

Whenever the oil is changed the base should be washed and wiped out thoroughly with clean rags.

PRESSURE REGULATING VALVE

The lubricating oil pressure in the system is controlled by an adjustable spring loaded regulating valve set at 35 psi located in the discharge pipe from the radiators to the engine header. To adjust the pressure, remove the valve cap, loosen the lock nut and turn the adjusting screw in to increase the pressure or out to decrease the pressure.

LUBRICATING OIL LOW PRESSURE SWITCH

The engine is protected from low lubricating oil pressure by means of oil pressure switch No. 115 and governor solenoid No. 113 as shown on the wiring diagram.

The oil pressure switch is held closed by the lubricating oil pressure and when this switch is closed, current flows from the switch to the governor solenoid. The governor solenoid, when energized, closes a pressure relief valve inside the governor and allows the governor to build up the internal pressure necessary for proper functioning.

If the Diesel engine lubricating oil pressure should fail, the oil pressure switch will open breaking the electrical circuit to the governor solenoid. The solenoid will then become de-energized, open the pressure relief valve in the governor and the governor will then bring the fuel pump racks to shutoff position.

The oil pressure switch is set to close at 23 psi and open at 20 psi. Therefore, in starting the Diesel engine, the starting button has to be held in until the lubricating oil pressure as indicated on the pressure gauge is above 23 psi. If the starting button is released before this pressure is reached, the Diesel engine will shut down.

LUBRICATING OIL STRAINERS

Two .005 Cuno lubricating oil strainers are mounted in the forward end cover ahead of the lubricating oil header and are similar to those used in the fuel oil system, Fig. 1-4. When turning the handle, the foreign matter scraped off drops from the strainer and accumulates in the base end cover until cleaned out. Always turn the strainer handle clockwise. The strainers may easily be removed from the base end cover by simply removing the

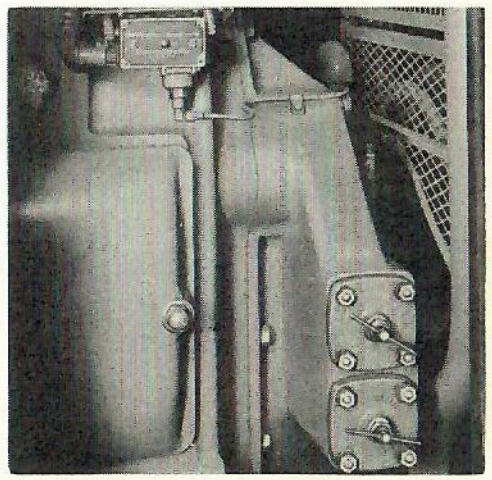

FIG. 1-4
LUBRICATING
OIL STRAINERS

nuts on the bolting flange and withdrawing the entire element. Care should be exercised in removing the strainer unit to see that particles of dirt are not scraped from the outside of the unit and allowed to fall in the clean oil compartment.

The cleaning handle should be turned each day until experience dictates otherwise. This condition will vary considerably with the circumstances under which the engine is operated. This strainer should be removed often and the accumulation in the base end cover cleaned out; this will also be governed by experience. If, due to neglect, the cleaning handle refuses to turn readily, do not force it. The strainer should be removed and cleaned in some suitable solvent.

LUBRICATING OIL FILTER

Each engine lubricating oil system is fitted with a one or two unit waste-packed oil filter through which the oil is passed. These filters are of the hard waste pack cartridge type and are so located as to make the removal of the cartridge and replacement a comparatively easy matter. The Road Switcher has two of these filters in the radiator compartment and the Standard 1000 HP Switcher has one in the radiator compartment while the Standard 660 HP has one filter located in the engine room.

These filters should be repacked often enough to keep the oil clean but at least once a month. A spare ready packed element will minimize delay.

Filter Removal

1. Remove top casting and filtering element from filter.

2. Remove wire ring and washer from the end of element.

3. The dirty waste and the center screen covered tube are to be removed. These can be slipped straight up off the inner center tube.

4. Remove the dirty waste from the screen covered tube being careful not to damage the copper screen.

Filter Packing

Replace screen covered tube in element and repack element with 7-1/2 pounds of long strand cotton waste or with a "sock" type packing. If cotton waste is used, it should be packed evenly and firmly to eliminate voids through the filtering material. A blunt end stick can be used to pack the waste down firmly. It must be packed evenly around center tube so that it does not push the center tube over to one side. The packing should be checked frequently during packing by trying the upper steel washer on the center tube. While dismantled, check relief valve and spring.

Filter Installation

1. Replace top washer and retaining wire and insert element in filter housing.

2. Replace top casting and gasket. Check gasket to see that it is clean and is not broken. Tighten the four nuts on the top evenly. Check for leaks after engine is started.

3. Before reinstalling element be sure that the bypass valves in the filter itself are operative.

FILTER CHECK VALVE

Check for proper oil circulating through the filter by feeling the relative temperatures of the filter casing and the oil lines. A cold filter with engine operating

would indicate oil is not circulating through the filter. In such a case check the setting of the check valve just ahead of the filter. This is set for 35 psi operating pressure.

LUBRICATING PROBLEMS

Dilution

Water — Discoloration of the lubricating oil to a gray brown color is evidence of water in the oil. Any thickening or emulsifying of the oil is more evidence of water.

Possible sources of water in the oil may be a cracked cylinder head, cracked cylinder liner, defective liner seal rings or a plugged water pump drain pipe which will cause the tray to fill up allowing water to go through the drive shaft bearing and thence into the gear casing.

Fuel Oil — The presence of fuel oil in the lubricating oil can be detected by a gradual rise in the lubricating oil level during operation, lowering of oil pressure or by a definite fuel oil odor in the lubricating oil. If dilution is suspected, check viscosity. Possible sources of fuel oil in the lubricating oil may be a leaky pipe connection in the fuel injection nozzle or a defective check valve in the fuel injection nozzle or a defective check valve in the fuel drain return pipe to the tank.

Excessive fuel dilution will thin the lubricating oil to such an extent that the lubricating oil pump can not maintain pressure high enough to prevent the low oil pressure switch from operating.

Therefore, the engine will shut down due to the low lube oil pressure. If dilution exceeds 5%, drain and refill crankcase with new oil.

Low Lubricating Oil Pressure

1. Check oil level in engine.
2. Check for clogged Cuno filters and clean by rotating handles.
3. Check for leaks, broken pipes and worn bearings.
4. Valve in line to waste packed oil filter may be stuck.
5. Pressure regulating valve stuck or backed off.
6. Oil may be hot from improper manipulation of radiator shutters.
7. Check for dilution.
8. Defective lubricating oil pump or built-in relief valve.
9. Idling speed too low.
10. Oil stoppage in radiator core.

Excessive Oil Consumption

This may be caused by an oil leak; worn, broken or stuck piston rings; broken, stuck or clogged oil control rings or an improper grade of oil.

Lubrication Oil Specifications

Use any recognized good grade of Diesel lubricating oil as manufactured by reputable oil companies providing it has the proper viscosity characteristics.

The oil must not be compounded with any animal or vegetable matter or any other substance that might be injurious to lead base bearings.

Please note that no attempt is made here to give any specifications which are a measure of quality and for that reason we recommend that the purchase of satisfactory lubricants be made from a reputable oil company whose standing is known to be high in the industry and one that has sufficient technical facilities to properly supervise its production as to quality and uniformity.

The following are the recommended viscosity characteristics for lubricating oil for the Diesel engine:

Viscosity

Max. SSU @ 100° F.	1300
SSU @ 210° F.	65-80
Flash Point, Min. °F.	390
Pour Point, Max. °F.	35
Carbon Residue, Max. %	.5
Water and Sediment	Trace

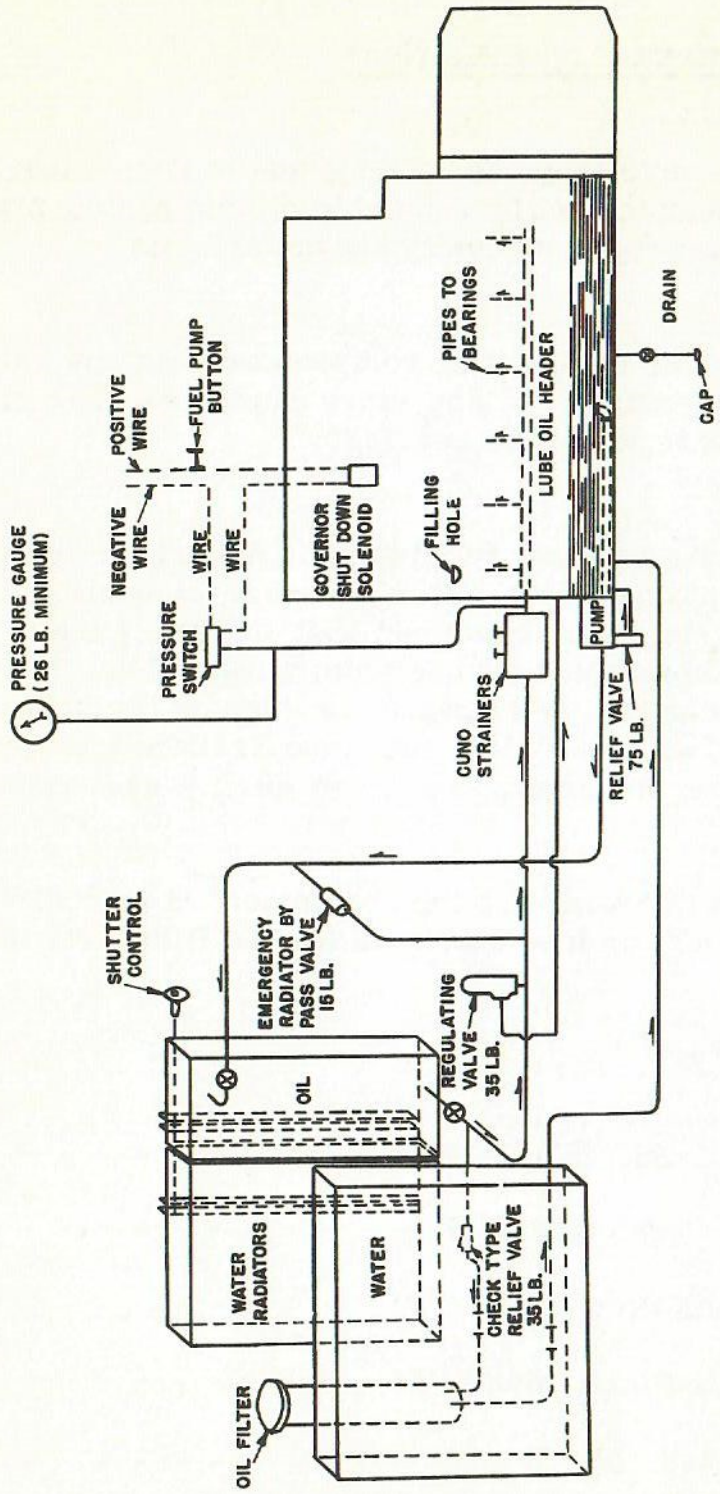

FIG. 2-4
LUBRICATING OIL SYSTEM
660 HP SWITCHER

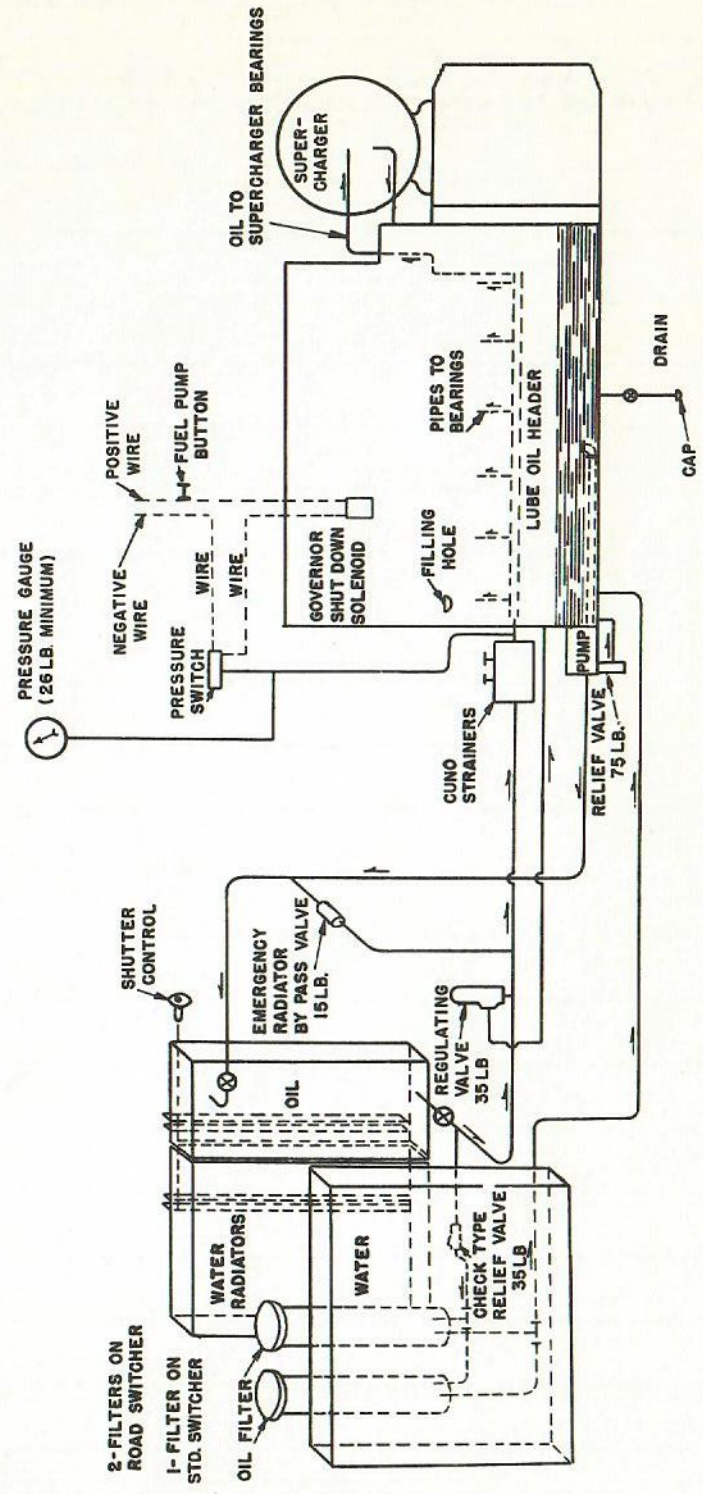

FIG. 3-4
LUBRICATING OIL SYSTEM
1000 HP SWITCHER AND ROAD SWITCHER

NOTES

COOLING WATER SYSTEM

DESCRIPTION

The cooling water, circulated by a pump, flows into the cylinder block around the liners, up through passages into the cylinder heads and out the water elbows into the water outlet manifold. Water from the manifold flows to the radiators, cab heater and expansion tank. It is a closed system with the expansion tank vented to atmosphere through an overflow pipe.

FILLING THE SYSTEM

The system may be either filled under pressure by connecting to an air hose type connection, Fig. 1-5, under the left center of the locomotive or by gravity through a roof filling hole into the expansion tank.

FIG. 1-5
FILLING CONNECTION

When filling under pressure, close the turbocharge drain valve (1000 HP engine), open the fill-drain valve located on the floor at the left side front of the engine, open the cab heater valves and open the engine block drain valve, Fig. 2-5. Fill under a maximum pressure of 25 psi until gauge glass shows full or until water runs out of the vent pipe. Close the fill-drain valve, disconnect the hose and close the engine block drain valve.

In extreme cold weather, leave the engine block drain valve cracked open as the pipe from the block to the valve might freeze and crack.

WATER LEVEL

The water expansion tank is located at the highest point in the cooling water system and is equipped with a sight level glass, Fig. 3-5, and overflow pipe. Never operate the engine without water showing in the sight glass.

WATER TREATMENT

Water treatment compound must be used at all times to maintain the Diesel engine cooling system in proper condition and to prevent corrosion. Do not use a boiler water treatment compound or oil in the engine water. Where anti-freeze compounds are used, special instructions will have to apply and materials shown herein should not be used.

Treatment compounds or cleansers that will attack rubber hose connections, cylinder head gaskets or that might corrode fitted joints must not be used.

It is recommended that the following quantities of either Dearborn 517 or Nalco 38, which are powder treatments, be added to

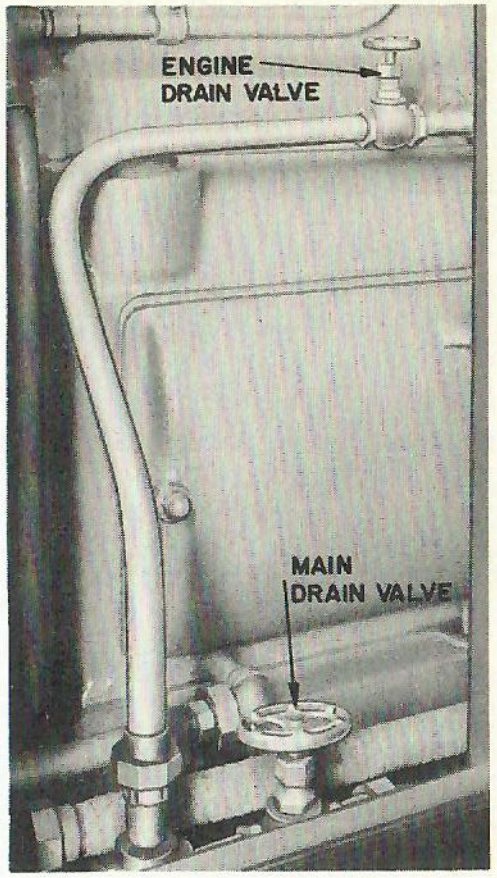

FIG. 2-5
FILL AND DRAIN VALVES

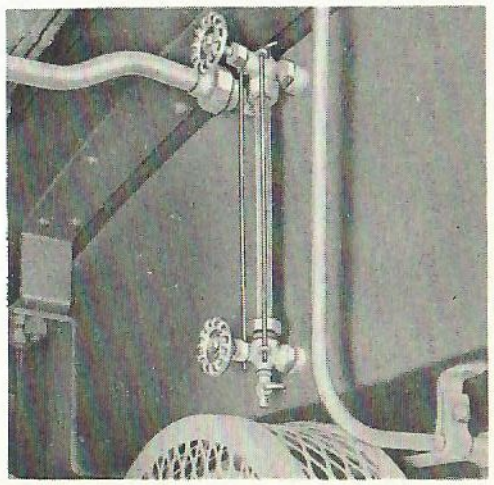

FIG. 3-5
SIGHT GLASS

maintain ph value of 8.5 minimum and chromate concentration of 2000 parts per million minimum at all times.

Use 7-1/2 pounds of Dearborn 517 or Nalco 38 for each complete filling of the cooling system and 1/2 ounce for each gallon of water added thereafter.

Only clean water must be used in the cooling system. Examine engine interior at time of overhaul to determine whether or not correct treatment has been followed. Treatment compounds should not be allowed to come in contact with the body. When treatment is used, it is not necessary to flush the system except for unusual causes.

OIL IN WATER SYSTEM

In case oil is ever noticed in the water glass, which indicates oil in the water system, eliminate the source, flush the system, refill and add 10 pounds of tri-solium phosphate. The engine should be operated with this solution in the system, for one day only, then drain and flush. Refill the system with fresh water and add the correct amount of water treatment.

DRAINING THE SYSTEM

Remove the dummy coupling on the air hose type filling pipe connection. Open the fill-drain valve, engine block valve, turbocharger drain valve (1000 HP engines) and the cab heater valves. By opening these valves, water will drain from the expansion tank, radiators, cab heater, turbocharger and all of the Diesel engine

Open the vent valve on top of the cab heater to insure proper drainage of the cab heater.

RADIATORS

Engine water and lubricating oil are cooled by air cooled radiators. The radiators are the standard sectional type of all brazed construction, located on each

side of the forward end of the hood. All of the radiator cores on the left or fireman's side are for cooling water. On the 660 HP locomotives, the rear three radiator cores on the right side are for lubricating oil while on the 1000 HP locomotives, the rear four cores are for lubricating oil. The remaining cores on the right side are for cooling water. The radiator fan draws air through the radiators exhausting the heated air upwards through the fan opening.

The radiator cores may be used for either oil or water on the 660 and 1000 HP switchers. On the Road Switcher the oil cores are the same as on the 660 and 1000 but the water cores are type AX98 and are so marked.

The cores are bolted to the top and bottom header with a cork gasket between the cores and headers.

FREEZING WEATHER PRECAUTIONS

The use of anti-freeze is not recommended because of the use of water treatment in the system and the fact that anti-freeze will not prevent the lubricating oil from congealing when the engine is shut down. Anti-freeze also attacks the rubber grommets and pipe thread sealers and lowers the boiling point of the water.

During layover periods in freezing weather, particular precaution should be taken that the engine cooling water is heated or drained. Steam from an external source can be admitted through the water filling connection, the steam valve opened to admit 4 - 5 pounds of steam. If water cannot be heated keep engine running; if engine cannot be run or water heated, drain radiator before the water becomes cold; drain engine and turbocharger.

Check the amount of water treatment in the water after heating the system with steam and add the necessary amount of treatment to correct for the untreated steam condensate in the water system.

COOLING PROBLEMS

Water Leaks

Water leaks should not be permitted. In case an unusual amount of water is required, inspect:

1. All water piping.
2. Inspect the hoses.
3. Make sure drain valves are closed.
4. Inspect radiators for leaks.
5. Inspect around the cylinder heads, water manifold, etc. Blow off the block just below the head each month to maintain it clean for inspection.
6. An internal leak to the lubricating oil such as from the lower end of the liner will be indicated by drops of water on the base screens or on top of the cylinder heads. The engine must be shut down in case of water in the lubrication oil, the trouble corrected and oil changed.

High Engine Temperature

For excessive or faulty temperature indication, note:

1. Water should not be permitted to boil.
2. If the engine has overheated from low water it should be allowed to idle and warm or hot water (150 degrees - not boiling) should be added slowly if available. If cold water is to be used, add it very slowly after the engine has cooled down to the extent that your hand can be held comfortably on the engine jacket.
3. Check water circulation and temperature by feeling various parts of the system.
4. The engine block drain valve should be closed when engine is running (leave valve cracked in

cold weather) or high temperatures may result.

5. Check shutter position and operation. Shutters should be examined to insure blades open full and pins are not worn excessively.

6. Radiator fan drive should be operating. If fan is not operating due to belt failure, loose belts or other cause do not operate engine.

7. Engine water pump should always be in good working order. If examination of system indicates pump is not working or water not circulating, engine should not be operated.

8. Check hose on both intake and outlet pipes and equalizing hose connecting engine water outlet header to the expansion tank.

COOLING WATER TEMPERATURE CONTROL

Maintain the cooling water temperature between 150° F and 170° F by manipulating the radiator shutters and the radiator fan roof shutter.

In controlling temperatures, start out with all shutters closed. Then first open the roof shutter by operating the lever in the cab. If the temperature exceeds 160° F with the roof shutters wide open, the side shutters should be opened beginning with the right, or engineer's side, in the summer time, and beginning with the left, or fireman's side, in the winter time. This arrangement gives better oil cooling since oil and water cores are mounted on the right side, while only water cores are mounted on the left side.

If the water temperature exceeds 180° F, determine the cause.

NEVER LET THE TEMPERATURE EXCEED 190° F.

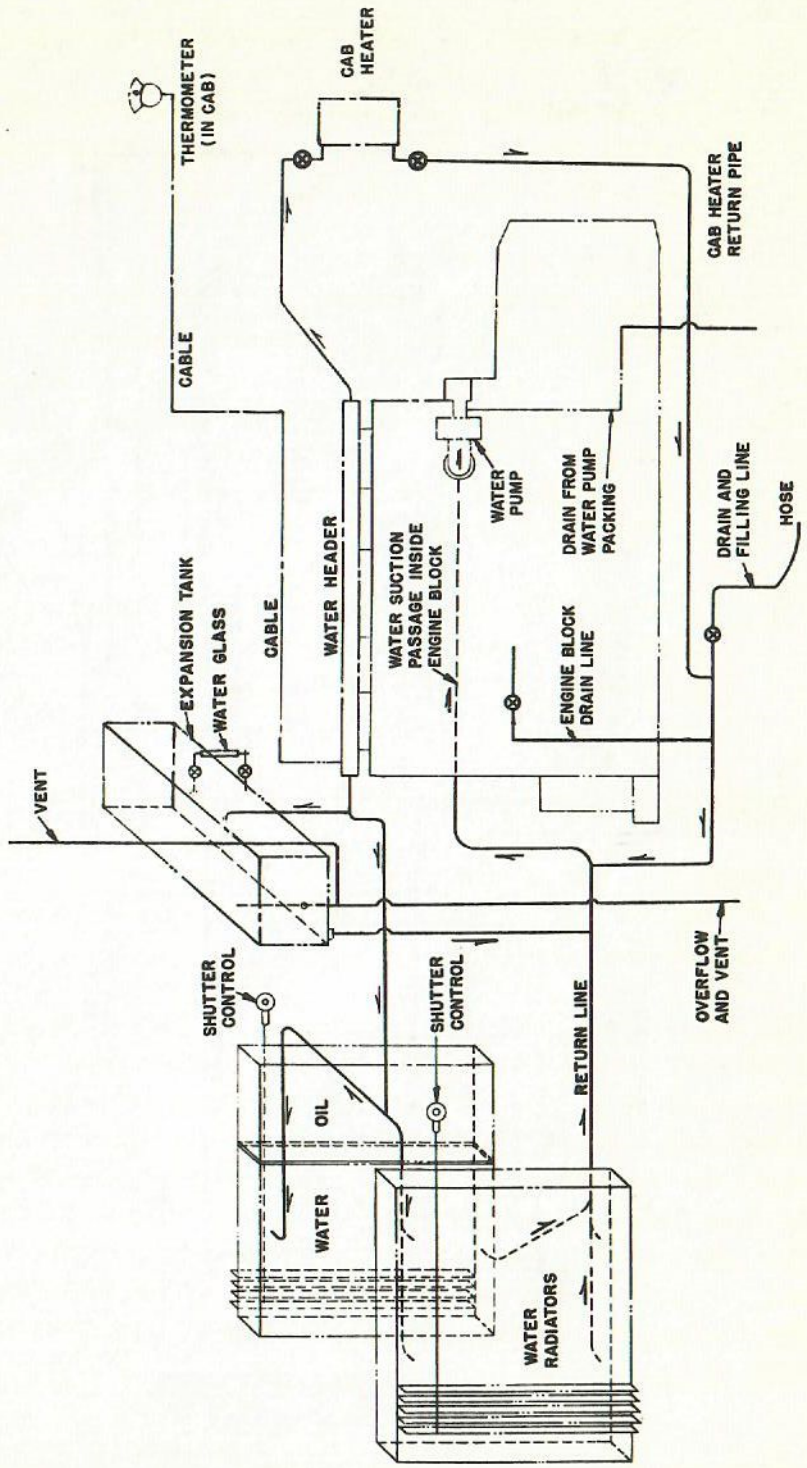

FIG. 4-5
COOLING WATER SYSTEM
660 HP SWITCHER

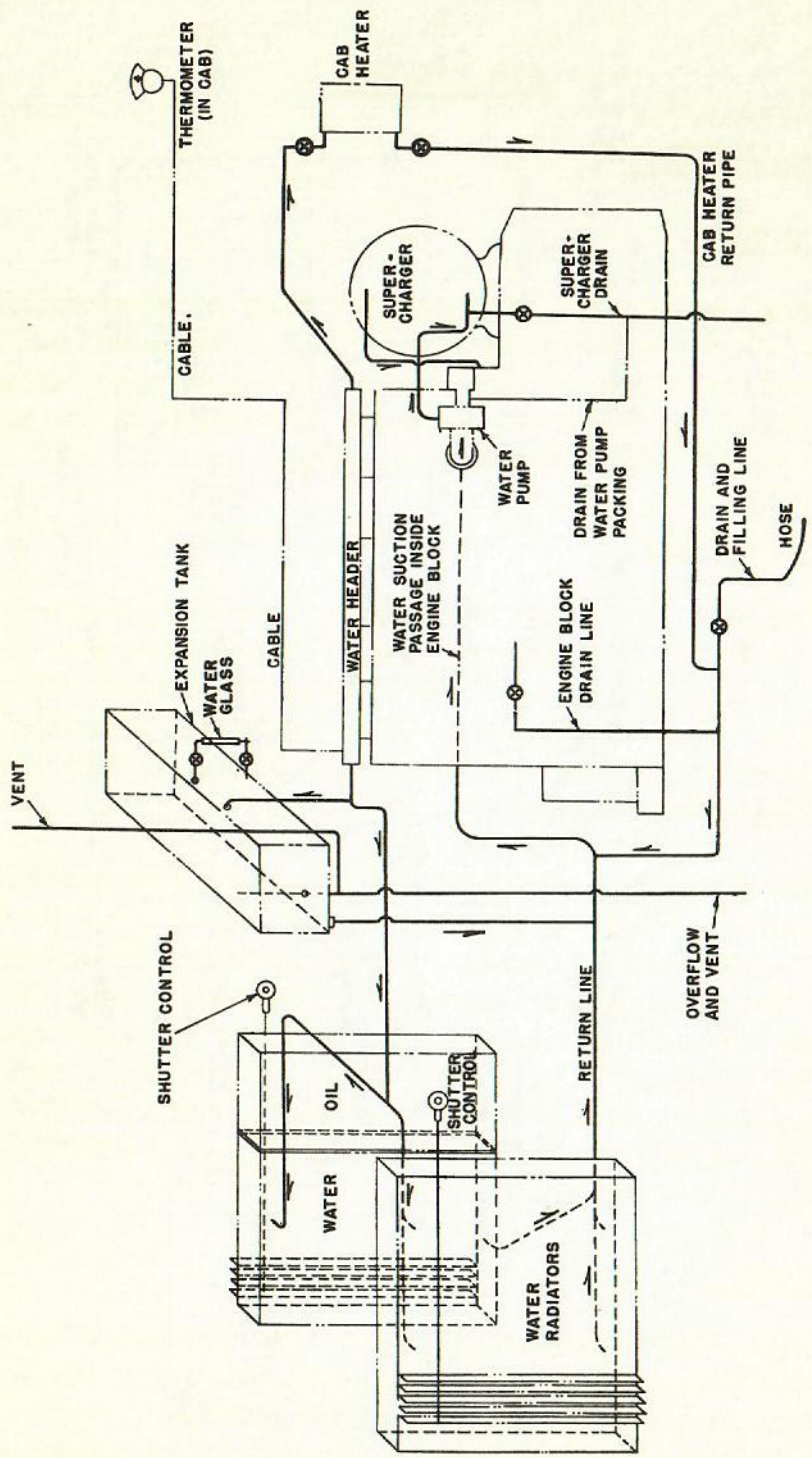

FIG. 5-5
COOLING WATER SYSTEM
1000 HP SWITCHER AND ROAD SWITCHER

AIR SYSTEM

AIR COMPRESSOR

Description

Each locomotive is equipped with a Westinghouse Type 3 CD, three cylinder air cooled, compound type air compressor, rated at 228 CFM at 740 RPM and 76 CFM at 275 RPM. It is driven from the stub shaft of the main generator through a flexible coupling.

Intake Strainers

The two air intake strainers, one for each of the low pressure cylinders, are of the "cartridge type" which permit removal of the strainer element with the necessity of dismounting or disconnecting from the air compressor. Air passing through the strainer unit enters the compressor intake.

The strainer element should be cleaned periodically. Dirt deposited on the metal wire mesh cover may be dislodged by jarring the strainer and by using dry compressed air. The blast of air should be directed along and not against the strainer unit. The strainer element should then be cleaned in an alkali-free hydrocarbon solvent and dried after which it is dipped and given a lubricating oil bath. After the oil has drained off, it is ready to be put back into service.

Intercooler

Since this compressor is of the compound type, it is fitted with an intercooler, through which the discharge air from each low pressure cylinder passes to the intake of the high pressure cylinder. The use of an intercooler reduces the temperature of the discharge air and improves the volumetric and power efficiency of the compressor. The intercooler is of the radiator type, employing finned copper tubing mounted between cast iron

headers. The intercooler is divided in two halves, one for each of the low pressure cylinders. The low pressure discharge air enters the intercooler through a side header leading to the top or upper header where it is directed down through part of the tubes in the one-half of the intercooler and back up through the remaining tubes in that half. In this way the air from each low pressure cylinder is so directed through its half of the intercooler that, in passing to the high pressure cylinder, the air has traveled approximately twice the length of the intercooler tube. Suitable baffles are employed to insure that the air follows the path desired. After passing the tubes the air enters a common passage leading to the intercooler safety valves and to the inlet side of the high pressure cylinder. Two type E-1 safety valves are employed to protect the intercooler against excessive pressure. These safety valves are set to open at 60 psi.

About the only attention the intercooler should need is draining to insure removal of moisture. Drain the intercooler every time the main reservoirs are drained. A drain cock is located in the bottom header of each bank of intercooler tubes.

When handling the intercooler care should be exercised to avoid damage to the finned tubing and also to see that undue strains are not placed on the header assembly. The top header is one piece while the bottom header is in two pieces to accommodate expansion due to temperature change. The lower headers are tied together by means of a bottom tie strap and capscrews and upon its removal the intercooler may be lifted vertically. When handling, replace the strap to prevent distortion of the assembly.

Compressor Details

The compressor consists of two low pressure and one high pressure cylinders. The two low pressure cylinders are the ones at either side and can readily be distinguished from the high pressure one because of their larger diameter. The three connecting rods are of forged steel and are identical. They are applied to a common

throw of the crankshaft. Each rod has its individual bearing on the shaft. Lubrication for the crankshaft end of the connecting rod is by pressure feed through the drilled crankshaft. The connecting rod is rifle drilled to the wrist pin which also is supplied with lubricant under pressure.

The cast iron pistons are fitted with four piston rings; two compression and one oil ring above the wrist pin and one oil ring below the wrist pin. All piston rings should be applied so that the scraping edge is toward the crankcase.

Piston wrist pins are of the full floating type and are supported in the connecting rods by means of bronze bushings. The wrist pins are prevented from having excessive end movement by retaining rings which snap in a recess in the piston and thus prevent the wrist pins working out against the cylinder wall.

The main bearings are the radial ball type, one at each end of the crankshaft. They are lubricated by means of "throw-off" from the connecting rod bearings. An oil seal is provided at each end of the crankshaft to prevent oil leakage and also to guard against entrance of dirt.

Internal Oiling System

The oiling system is arranged so that oil under pressure is circulated by means of an oil pump. The oil pump is driven by an eccentric at one end of the crankshaft. This pump combines a piston and check valve operating in an oil pump body and is so arranged as to deliver the lubricating oil under pressure to drilled openings in the crankshaft.

The oil supplied to the pump is first filtered. The filter consists of a housing incorporating a fine screen strainer of large area through which the oil is drawn on its way to the oil pump body. The screen strainer is held in place by a screen retainer which must be removed before the screen can be removed.

The oil gauge should show approximately 15 psi at 500 RPM and should still show pressure at idling speed.

An oil pressure relief valve, mounted in the crankshaft throw towards the intercooler, is provided to protect the oil pump and associated parts against excessive oil pressure.

Lubrication

Lubricating oil is carried in the base of the compressor which is equipped with a bayonet gauge, filler and drain connections, filter and breather. Twelve quarts of crankcase oil should be maintained in the compressor crankcase. For oil change periods and specifications refer to the Lubrication Schedule.

Oil Pump and Strainer

To dismantle the oil pump, it is first necessary to remove the main bearing end cover on the end of the compressor away from the intercooler. With the crankshaft rotated so that the oil pump plunger is in the vertical position, the entire oil pump plunger and body assembly may be removed by pulling it endwise along the compressor crankshaft.

To remove the oil pump strainer, take out the oil strainer body bolt and pull the strainer assembly out toward the intercooler.

In replacing the main bearing cover, care should be used to enter the end of the oil pump body properly in the cover which supports it.

Connecting Rods and Pistons

The connecting rods are of the split type and are fitted with laminated shims for adjustment. The crankshaft end of the connecting rod contains the bearing metal which is poured into the rod. Access to the connecting rods and the interior of the compressor for inspection

can be made through the side plates on either side of the compressor just below the low pressure cylinders. If, for any reason, it becomes necessary to remove the pistons or connecting rods, the low pressure pistons can be taken out without disturbing the cylinders. They come out through the top of the cylinders after removing the heads.

To remove a high pressure piston, it is necessary to remove the high pressure cylinder before the rod can be taken out. After removal of the cylinder, the piston is lifted out through the opening left by the removal of the cylinder.

Air Valves and Unloader Arrangement

There are two inlet valves and one exhaust valve for each of the low pressure cylinders and the high pressure cylinder. They are of the double washer type and all are located in the compressor head.

The inlet valves of the two low pressure and of the one high pressure cylinders are equipped with unloaders which are controlled by a governor. They are so arranged that when the compressor has restored the pressure in the reservoir system to the desired point, the compressor will unload and cease to deliver air to the main reservoirs.

The tapped opening in the cap nut of each of these unloader cylinders connects to a copper pipe header which leads to the compressor governor. When the compressor has reached the desired pressure in the reservoir, the governor admits main reservoir air through this tapped opening in the cap nut onto the face of the unloader valve. This pressure immediately moves the unloader valve in towards the cylinder, carrying with it the intercooler pressure seal valve. This, in turn, acts through the unloader plunger which has as a part of the plunger, a head with four fingers or prongs on its lower side. These prongs extend through openings in the inlet valve seat. With the pressure admitted as described

above, these fingers will push the inlet valves off the seat and the compressor is then unloaded, as no compression takes place as long as the inlet valves are thus held open. Complete movement of the unloader valve on which the main reservoir pressure first acted, results in its seating and preventing leakage of main reservoir air through the unloader assembly to the atmospheric vent.

When the pressure in the main reservoir has dropped to the point where it is desired to cause the compressor to operate, the governor assumes the "cut-in" position which vents main reservoir air from the face of the unloader valve. The return and unloader springs then move the unloader valve outward, carrying with it the unloader plunger and the four fingers which unseated the inlet valves. The inlet valves are seated then by the valve springs and the compressor resumes delivery of air to the main reservoir.

Discharge Valves

If for any reason it is desired to remove or inspect the discharge valves, it is only necessary to remove the cap nut and then back out the valve plug using a rectangular bar wrench 1/2" x 1/2" x 3' long which fits into rectangular slots on the face of the plug. A large monkey wrench will be necessary to turn the bar, or a "T" handle wrench with 1/2" x 1/2" head might be more suitable. After removal of the valve plug the complete discharge valve assembly can be lifted out, the seat, valves, springs and spring retainer being held together by a stud, castle nut and cotter pin.

Inlet Valves

The inlet valves are held in place by the unloader body and an inlet valve plug like that described for the discharge valve. To remove the inlet valve assembly, first remove the unloader body and lift out the unloader valve assembly. Back out the inlet valve plug, using the bar wrench as described for the discharge valve, which will free the inlet valve assembly and permit its

removal. The valve assembly which consists of seat, valves, springs and spring retainer, are held together by a stud, castle nut and cotter.

Replacing Inlet and Discharge Valve Assemblies

When replacing inlet and discharge valve assemblies in the cylinder head it is important that the copper gasket between the head and valve seat is in good condition. Generally, it is better policy to replace this gasket with a new one when reassembling. The same gasket is used for all inlet and discharge valve assemblies. It is also important to make absolutely certain that valve assemblies are replaced with the castle nut side pointing outward, i.e., away from the compressor piston. In some instances it might be possible to turn an assembly over and should this be done, serious damage to the compressor might result if operated under this condition.

The valve and valve springs of all inlet and discharge valve assemblies are completely interchangeable. The inlet and discharge valve seats are not interchangeable. All inlet valve assemblies have the same valve seat; all discharge valve assemblies have the same valve seat.

Crankcase Breather

The compressor crankcase is vented by means of a breather with cap. It has a quantity of copper gimp supported between suitable screens retained in place by means of a snap ring.

The breather is also fitted with a check valve so arranged that any pressure in the crankcase will be relieved to atmosphere, but any tendency for air to flow from the outside of the compressor into the crankcase is prevented. This check valve is felt-sealed for quiet operation.

ORIFICE TEST

Use a 17/64" diameter orifice with square edges and bored through a plate 1/16" thick. The orifice and gauge should be placed in the reservoir farthest from the compressor. With the compressor running at 550 RPM the following table shows the condemning limit pressures at various altitudes.

Elevation (feet)								
0	1000	2000	3000	4000	5000	6000	7000	8000
Condemning Limit (psi)								
102	98	94	90	86	82	78	75	71

AIR COMPRESSOR GOVERNOR

Type - NS16

This governor is of the pneumatic double "safety valve" type and consists of two distinct portions; the operating portion and the pipe bracket. Pipe connections to the compressor and to the main reservoir are provided for in the pipe bracket so that the operating portion may be removed for repairs or replacement without breaking any pipe joints.

The operating portion casting is marked HP and LP. The adjusting screw in the HP section is used to regulate the point of air compressor cut-out or unloading point while the adjusting screw in the LP section is used to regulate the point of air compressor cut-in or loading point. Therefore, it is necessary to set two pressures when adjusting the governor, the High pressure, where the governor unloads the compressor and the Low pressure where the governor loads the compressor.

To adjust governor pressures, loosen both lock nuts where the adjusting stems protrude from the top of the

governor and screw cutout regulating stem (HP side) down until the desired cutting-out point is reached. A main reservoir air pressure gauge is located near the governor for use when making pressure adjustments. At the same time screw down cut-in regulating stem (LP side) to as nearly the same tension as can be judged under ordinary observation. If when the cutting-out point is reached the range is not as desired, screw the cut-in regulating stem down to raise the cutting-in point or to decrease the range and back it off to lower the cutting-in point or to increase the range.

This governor needs very little attention after being properly adjusted except to be cleaned and oiled periodically. When cleaning and oiling the governor, a few drops of good oil should be placed on the surface passed over by the cutting-in and cutting-out valves. See also that the exhaust opening is free from dirt or gum and the strainer is clean.

Type S16

If locomotives are equipped with air compressor synchronization, Type S16 governor is used. This type of governor, in addition to the operating portion and pipe bracket, also has an air operated switch which controls current to a magnet valve in each locomotive unit. The magnet valve controls the flow of main reservoir pressure to the air compressor unloader valves in its unit. By means of this control, all air compressors are either loaded or unloaded simultaneously.

Governor maintenance instructions and pressure adjustments are made the same as on the NS16 governor. The switch has self-contained fingers and bases encased in molded insulation and can be readily removed as units without special tools. The finger adjustment is permanent and accomplished without use of screws. An efficient pneumatic blow-out when the governor cuts out, in combination with the peculiar shape of the contacts, insures that the opening arc is definitely lengthened, cooled and then effectively extinguished.

TESTING SAFETY VALVE

In order to test a main reservoir safety valve it is necessary to keep the air compressor loaded above the governor high pressure setting. In order to accomplish this, close the governor air supply cutoff valve. This prevents main reservoir pressure reaching the air compressor unloader valves and thereby keeps the compressor loaded.

AIR SYSTEM

Air from the compressor passes through cooling pipe, then through a safety valve set at 10 psi higher than the main reservoir pressure. The air then enters the No. 1 main reservoir under the frame, right side, then through more cooling pipe into the No. 2 main reservoir, left side. Air supply lines are connected to the No. 2 main reservoir which furnish air for the control air system, air compressor governor, sanders, air brake system, bell, horn and window wipers.

CONTROL AIR SYSTEM

Air pressure is used to operate the reverser, series and series-parallel contactors. The system includes a cutout cock, strainer and check valve, reducing valve, air gauge and reservoir. The air gauge is mounted on the gauge panel at the engineer's position while the rest of the equipment is located below the underframe on the fireman's side of the locomotive.

Air pressure from the No. 2 main reservoir is reduced to 70 psi by the reducing valve and stored in the control air reservoir.

If the gauge should indicate pressure other than 70 psi, the trouble will probably be found in the reducing valve. Close the cutout cock and open the drain valve in the control air reservoir to drain the system of air before removing the reducing valve.

If high pressure is indicated no serious difficulties should be experienced before the trouble is corrected. However, low pressure will cause the electro-pneumatic contactors and reverser to become inactive with the result that the locomotive will not move.

DRAINING AIR SYSTEM

The air system should be drained daily or after each trip to prevent moisture from reaching the air brake and control air systems.

Drain the following:

1. Air compressor intercooler - both sides.

2. Main air reservoirs.

3. Control air reservoir.

SANDING

Standard switching locomotives have air operated sanders for the front wheels of the front truck and back of the back wheels, rear truck.

Forward sanding is obtained by moving the engineer's sander valve to its forward position and reverse sanding is obtained by moving the valve to its back position.

Actuating air from the engineer's valve controls the flow of main reservoir air through the sander control valves to the sand traps.

With multiple-unit control forward and reverse sanding is controlled from the engineer's foot pedal type

sander valve through the reverser. Electrical connections from the forward or reverse position of the reverser control the operation of magnet valves.

Actuating air from these magnet valves control the flow of main reservoir air through the sander control valves to the forward or reverse sand traps.

To increase the amount of sand flow turn the nozzle adjusting nut, located at the sand trap, clockwise and to decrease the sand flow, turn the nozzle adjusting nut counterclockwise.

AIR BRAKE SCHEDULE

For operation and maintenance information on the brake equipment used on the switching locomotives, refer to Westinghouse or New York Air Brake instruction pamphlet covering 14 EL equipment. This is similar to 6 ET equipment used on steam locomotives. A control reservoir is added which supplies air to the electro-pneumatic reverser and motor contactors S, SP1 and SP2.

AIR PROBLEMS

Loss of Air Pressure

1. Compressor governor may be stuck - try tapping it.

2. Control air should be 70 pounds. Check control air reducing valve, cutout cock and strainer under locomotive frame.

Poorly Maintained Main Reservoir Pressure

1. Compressor valve leaking - causes low pressure.

2. Compressor governor sticking - causes either high or low pressure.

3. Broken unloader pipe - causes high pressure.

4. Sticky unloader valves - causes low or high pressure.

5. Internal failure of compressor - causes low pressure.

6. Closed cutout cock in governor pipe - causes high pressure.

Air Pressure Does Not Build Up

1. See that main reservoir drain valves and brake pipe angle cocks are closed.

2. Compressor governor may be stuck. Try tapping it.

3. Faulty compressor.

4. Compressor drive coupling may be faulty.

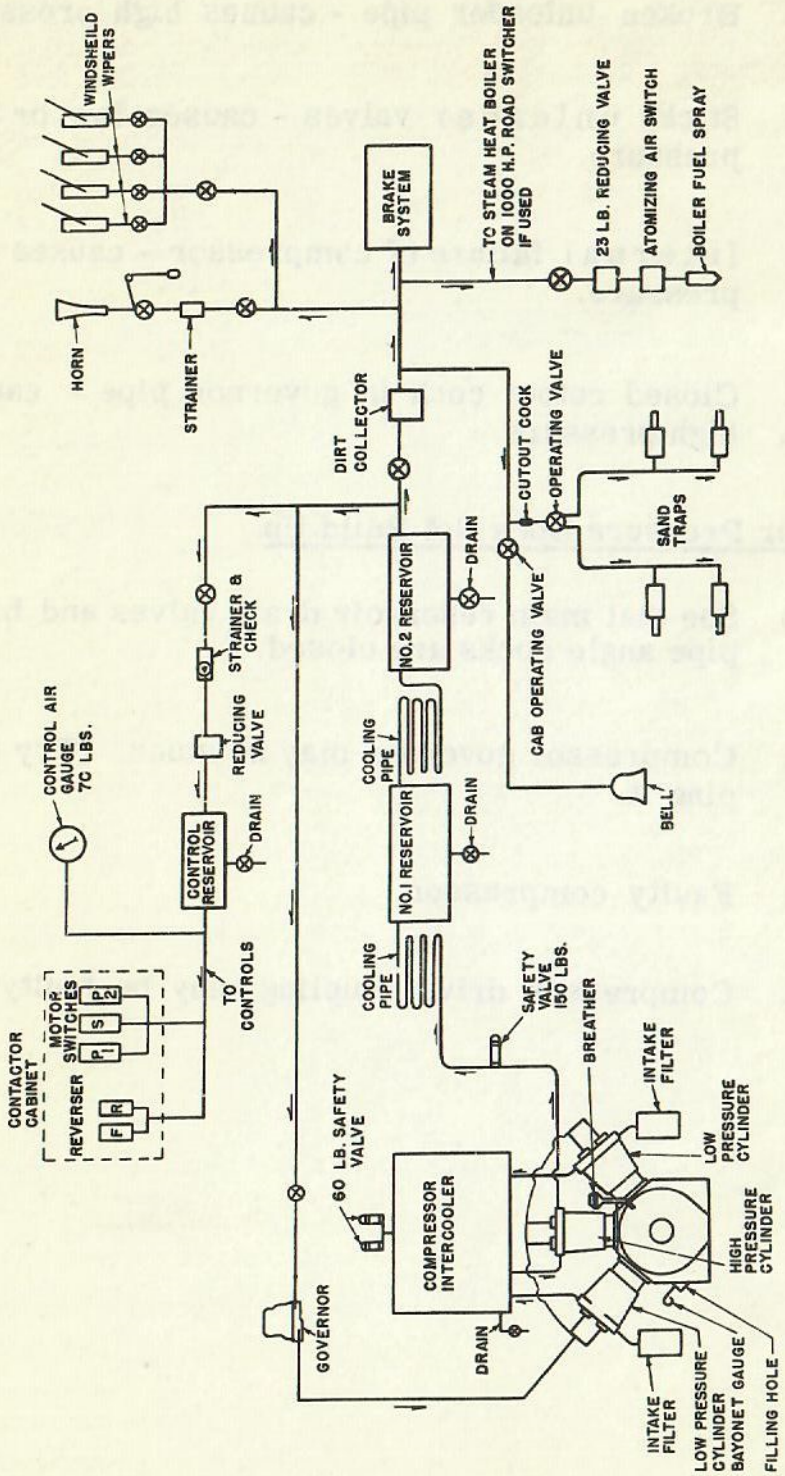

FIG. 1-6
AIR SYSTEM

CHASSIS

BATTERY

The locomotive storage battery is the heart of the electrical system. Its primary duties are engine cranking and furnishing current for control and lighting circuits.

The battery is made up of 32 cells, four in each of eight trays. Four trays are carried in the battery box on each side of the locomotive. The lift of the battery will be prolonged by regular inspections, recording conditions, and taking immediate corrective steps as necessary.

When a new battery is received the electrolyte level in all cells should be checked. If the level is more than 1/8" below the bottom of the filling tubes, add electrolyte of the same specific gravity and check to see if cells are leaking.

There are two means of checking the operation of the battery. These are by observing the specific gravity of the electrolyte and by noting the water level. If the voltage regulator is adjusted to maintain these two characteristics within the prescribed limits, the life of the battery will be prolonged and optimum operation will be obtained.

HYDROMETER READINGS - SPECIFIC GRAVITY

The specific gravity of the electrolyte in the battery as measured with a hydrometer, will rise on charge and lower on discharge. The hydrometer reading of the fully charged battery at 77° temperature should be 1.275. A change of 30° in battery temperature will change the hydrometer reading 0.010 (10 points). Readings taken at low temperatures will be lower than those taken at high temperatures with the same electrolyte.

7

When taking hydrometer readings be sure to hold the syringe vertically so that the hydrometer will float freely. Do not take readings immediately after adding water to a cell. Allow a day in service for the water to mix with the electrolyte. Do not use the same cell all the time to take readings. Each month change to another cell. Be careful not to spill any of the electrolyte, returning all of the electrolyte to the cell from which it was removed.

BATTERY INSPECTION

Every day the specific gravity of the electrolyte of one or two cells should be tested with a hydrometer and their electrolyte level checked. Use one cell in each battery section for check but change to another cell in each section each month.

The hydrometer should read within the limits of a fully charged battery and not less than 35 points below or 1.240.

It is normal for the battery to require the addition of water and the level in the battery cells must be kept above the top of the plates, but at least 1/8" below the bottom of the filling tube. However, there is a definite amount of water which should be consumed over a period of time by a battery being properly charged. The addition of water should be as indicated below:

Water Additions Per Month Per Locomotive Battery

Maximum - 10 Quarts
Minimum - 5-1/4 Quarts

If the battery is using excessive water it is receiving too great a charge.

BATTERY REGULATION

Since current from the battery furnishes standby lighting control current and starts the engine using the

main generator as a starting motor, the current used must be restored by the auxiliary generator.

The auxiliary generator, with its voltage controlled by a voltage regulator, maintains an approximately constant voltage across the battery throughout the range of Diesel engine speed. The fully charged no load or open circuit battery voltage is 64. The auxiliary generator voltage is approximately 75 as measured in the contactor compartment across terminals A+ and A- at the base of the voltage regulator.

To adjust the voltage of the battery, it is necessary to use an open scale voltmeter placed in the charging circuit across terminals A+ and A- on the voltage regulator. When checking the regulator setting, the coils must be hot and adjustment is made by using the high and low speed adjusting rheostats on the regulator; these should be adjusted alternately until the voltage is the same for both speeds. Never adjust the voltage more than 1/2 to 1 volt until the locomotive has operated in its normal service for a day and the results checked. Normally the auxiliary generator voltage will be about 75 volts but will vary slightly as the necessary adjustments are made to maintain the batteries properly charged under different operating conditions.

BATTERY - GENERAL RULES

1. Cleanliness is important. Prevent collection of dirt and oil on the top of the battery. With the battery switch open, wash off with ammonia or baking soda solution (1 pound of soda to a gallon of water) and rinse with water. Blow out battery compartments and space between trays and wash the entire compartment and top of the battery with a hose under moderate pressure quarterly; then blow out the surplus water with an air hose.

2. Do not lay metallic objects on top of the battery.

3. Keep all connections in the battery circuit tightly bolted and clean.

4. Add only distilled or approved water. Addition of electrolyte is unnecessary unless some is spilled. Acid or special compounds should never be added.

5. When taking hydrometer readings be sure to hold the syringe vertically so hydrometer will float freely and note the corresponding electrolyte temperature. Do not take readings immediately after water has been added. Each day take readings in a different cell.

6. If one particular cell varies considerably from the other either in respect to specific gravity or water consumption, investigate and correct the cause. Give equalizing charge.

7. Keep a daily record of battery inspections.

AUXILIARY DRIVES

BELTS

Inasmuch as V belts have contact surfaces on the side walls, the high tension required with flat belts will not apply.

If possible a complete set of new matched belts should always be installed and the remaining old belts removed. If sufficient number of good second hand belts have accumulated it may be possible to match same up and utilize them for future installations.

These should not be used on a drive where it is expected to keep same in service for a long length of time or where application is difficult, as naturally the life of these used belts will be less than new belts.

When applying new belts to any drive, the tension device should be released so that the belts can be applied freely over the pulleys. If the belts are forced over the pulleys a ply-break may occur resulting in damage to the belts.

After a set of belts have been applied, the drive should be run for approximately three-quarters of an hour before checking the tension. This will allow the belts to become well seated and equalized on both sides of the pulleys before checking for tension.

After the belts have been broken in on the drive the tension may be checked roughly by depressing the belt in the center (this is halfway between the two pulleys). This amount will vary somewhat on account of the variation in center distances and of course the amount of depression is dependent on the center distances of the drive but, ordinarily this should be the normal pressure possible to exert with one finger without straining.

If too much tension is applied, trouble will be experienced on the bearings of the drive, with resultant short belt and pulley life. If the belts are applied too loosely, the belts will slip, thereby decreasing their life.

Belt dressings are not required and should never be used. Belts should be kept clean and free from oil. Belts not in use should be stored in a cool dark place as excessive heat deteriorates the belts. Do not store on a damp floor or where water or steam may damage the belts. When necessary to replenish stock make sure that belts previously in stock are used before using the newly acquired belts.

When applying new belts a continuous type V belt should be used. When applying a new set of belts, care should be taken to have the belts a matched set. Connector type belts can be used in an emergency. These should be replaced as soon as possible.

Belts should never ride the bottom of the grooves.

Any excessively tight may cause a bearing failure. The points to check are:

1. Coupling, pulley, belts and bearings in the auxiliary generator drive.

2. Pulleys and belts in the drive of both traction motor blowers.

3. Pulleys, coupling, bearings, belts, and right angle gear box of the radiator fan drive.

PULLEYS

Pulley Groove Wear (Steel or Cast Iron)

1. Pulley groove wear has been found to have a great bearing on belt life. Pulleys should be regrooved or resurfaced at reasonable intervals. Some railroads resurface their cast pulleys by spraying the grooves with a mixture of high carbon steel. The grooves are then remachined to size and polished.

2. When resurfacing is not done but where pulleys are to be machine turned, the amount of wear and the extent of turning should be done in accordance with the following table. The amount of wear and turning shown is for ONE side of the groove only.

First condemnation point at ---	.030 inch wear
First turning to ----------	.040 inch
Second condemnation point at -	.070 inch wear
Second turning to ----------	.080 inch
Third condemnation point at --	.120 inch wear

If wall thickness is less than 1/8 inch after third turning, the pulley is to be scrapped.

PULLEY REPLACEMENT

Pulleys should be inspected to insure their being tight on the shaft at all times. The pulleys have a taper fit (except idler pulley) and in each case during repair or replacement the following rules should be observed.

The pulley should be pulled up tight, should have a good fit over the shaft surface and the key should be carefully fitted so that the pulley does not rest upon it.

PULLEY ALIGNMENT

When applying new pulleys or making adjustments, make sure the running pulleys are in alignment to insure straight belt operation.

AIR COMPRESSOR DRIVE

DESCRIPTION

The locomotive air compressor is connected to the traction generator stub shaft by a Fast's coupling, Fig. 1-7. The coupling consists of two flexible halves each half being made up of a hub and sleeve. The hub which fits onto the generator shaft is a straight fit while the air compressor shaft hub is tapered. The sleeve and hub are connected through teeth allowing transmittal of power from one hub to the other.

The belt drive pulley is bolted to sleeve flange on the generator side of the coupling.

REMOVAL

1. Remove nuts and bolts from coupling flange and jack the sleeve on the air compressor end until it clears the hub. A small container should be used to catch the lubricant.

2. Move air compressor to separate the hubs.

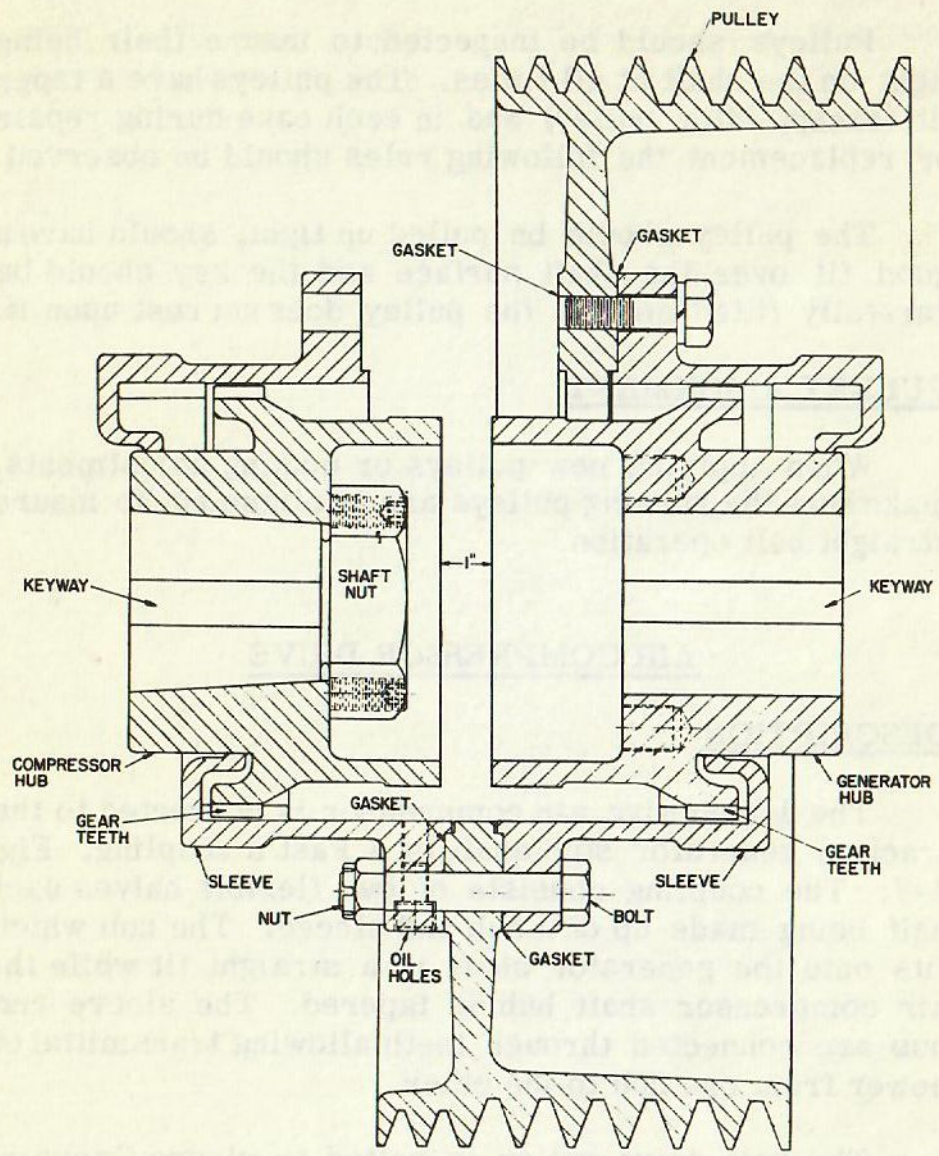

FIG. 1-7
FAST'S COUPLING

3. Lift out the pulley.

4. Remove the hex nuts from shaft ends and with a hub puller remove coupling hubs from both shafts.

5. Remove coupling sleeves.

INSPECTION AND MAINTENANCE

1. Inspect teeth on both hubs and sleeves. If teeth are worn to a sharp edge, renew.

2. Examine gasket and renew if necessary.

3. Remove any burrs found on the sleeve and hub faces.

REASSEMBLY AND INSTALLATION

1. Clean both shaft fits and keyways. Clean hub fits and keyways. Make sure that the key is free of burrs and fits on its side for the entire length of the hub keyway. The key must not bear on the top or bottom. Apply keys to keyway.

2. Slide sleeve over the generator shaft and the air compressor shaft before the hubs are applied. The air compressor shaft is tapered while the generator shaft is straight. Both hubs are shrunk onto the shafts. The hub on the air compressor shaft is heated at 200 degrees F for 20 minutes before application. The hub on the generator shaft is heated at 400 degrees F for 1 hour before application. Apply hubs and hex nuts.

3. Adjustment for alignment is made by positioning the air compressor. The alignment faces of the hubs must be separated 1 inch. The shafts can be lined up by using calipers on the alignment faces and a straight edge on the top sides of the alignment faces.

4. Apply gaskets to both sides of the pulley hub. Bolt the pulley to the generator coupling sleeve, align the coupling and then bolt the two sleeves together.

RADIATOR FAN DRIVE

DESCRIPTION

The engine cooling water fan, located in the radiator compartment, is belt driven from the engine and the fan speed therefore, varies with engine speed. The fan draws air through two banks of tube and fin type radiators, dissipating the heat from the water and exhausting the hot air through the roof opening. Manual manipulation of the radiator and fan shutters control the water temperature.

The fan drive consists of a drive pulley, idler pulley and driven pulley connected by belts. The belts drive a hotizontal shaft supported by two bearings. The shaft is connected to a right angle gear box by a flexible coupling of either the Fast's or Falk type. The fan is mounted on the vertical shaft of the right angle gear box.

The shaft, bearings and right angle gear box are mounted on one common bed plate.

REMOVAL

1. Back off on idler pulley and slip the belts from the pulley on the horizontal shaft.
2. Remove the shutters over the fan opening.
3. Pull the fan off the vertical shaft of the right angle gear box.
4. Remove the bolts and spot weld which fasten the mounting frame to the locomotive.
5. Lift the fan drive assembly out through the fan opening in the roof.

DISASSEMBLY

The couplings used in this drive assembly may be either the Falk type or the Fast's type.

FALK COUPLING REMOVAL

1. Remove bolts from coupling cover and slide back, Fig. 2-7.
2. Clean lubricants from hubs and flexible grids.
3. Insert screw driver at the open end of the grid-member and pry up working around the entire

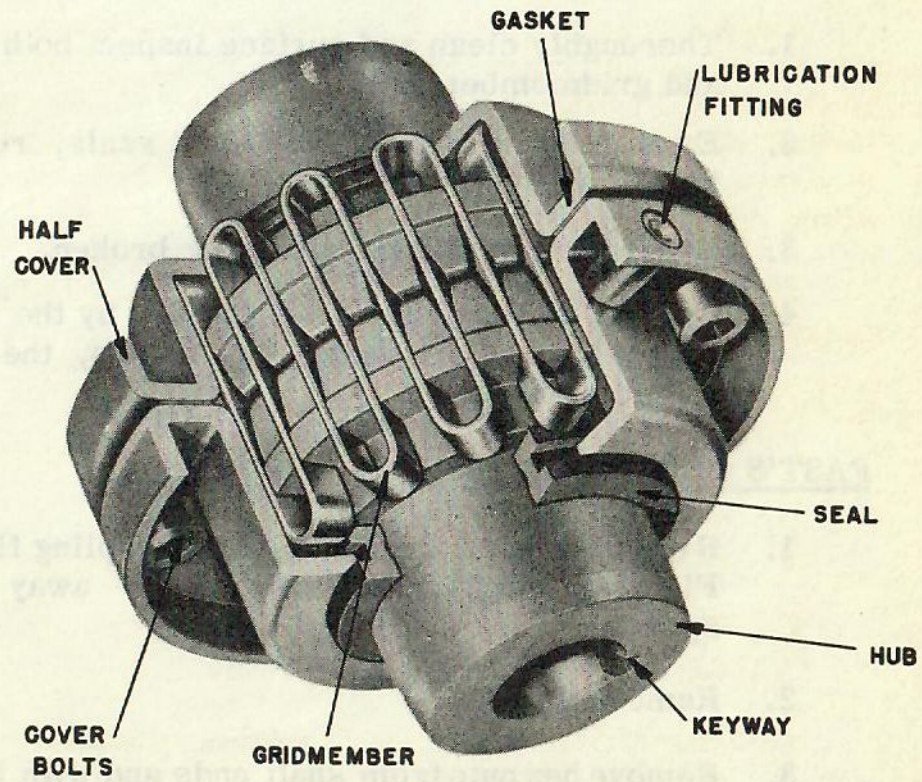

FIG. 2-7
FALK COUPLING

coupling. Extreme care should be used in removing so as not to distort the gridmember.

4. Separate the coupling hubs. To do this loosen the Allen set screws in the locking collars at each of the bearings and turn the collars slightly to unlock them. The locking collars have an inside lip and must be turned to be loosened. The coupling hubs can then be separated by pulling the shaft through the bearings.

5. Remove hex nuts which are self locking.

6. Using a hub puller, remove the hubs from both shafts.

7. Remove covers.

FALK COUPLING INSPECTION AND MAINTENANCE

1. Thoroughly clean and surface inspect both hubs and gridmembers.

2. Examine cover gasket and shaft seals, renewing if necessary.

3. Renew gridmember if nicked or broken.

4. If teeth on hubs have been grooved by the gridmember to a depth of .035 inches, the hubs should be replaced.

FAST'S COUPLING REMOVAL

1. Remove nuts and bolts from coupling flange, Fig. 3-7 and jack coupling sleeve away from spacer.

2. Remove spacer.

3. Remove hex nuts from shaft ends and with a hub puller, remove coupling hubs from both shafts.

4. Remove coupling sleeves.

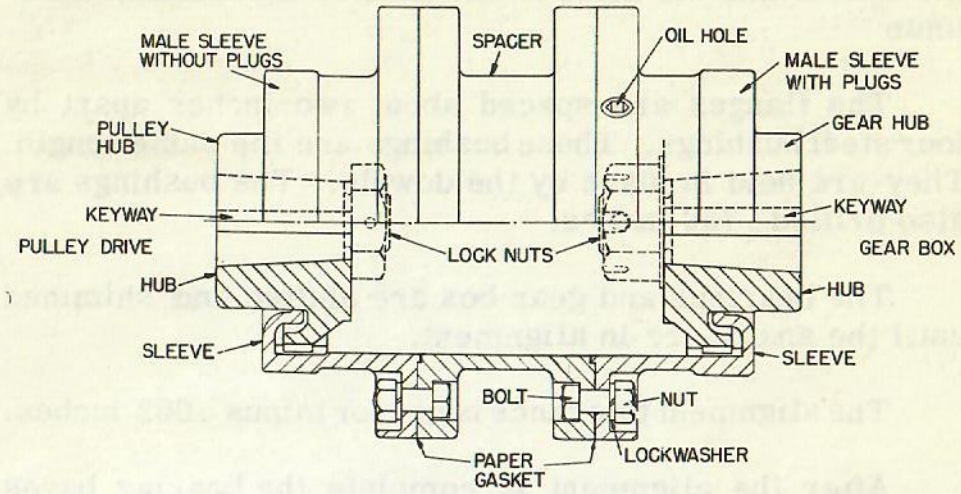

FIG. 3-7
FAST'S COUPLING

FAST'S COUPLING INSPECTION AND MAINTENANCE

1. Inspect teeth on both hubs and sleeves. If teeth are worn to a sharp edge, renew.

2. Examine gasket and renew if necessary.

3. Remove any burrs found on the sleeve and hub faces.

FAN DRIVE ALIGNMENT

The aligning of the drive shaft and right angle gear box is done on a bench. The gear box and the two bearings for the drive are bolted to a bedplate. The bolt holes in the bedplate are oversize to allow for the shifting of parts.

Two ten inch dummy flanges with four .750 inch holes drilled about four inches from the center of the flange are used for aligning the drive shaft and the gear box shaft.

Four dowels which fit into the holes in the flanges

are used in aligning the shafts. The clearance between the dowels and the holes in the flanges is .002 inch maximum.

The flanges are spaced about two inches apart by four steel bushings. These bushings are the same length. They are held in place by the dowels. The bushings are also drilled .750 inches.

The bearings and gear box are shifted and shimmed until the shafts are in alignment.

The alignment tolerance is plus or minus .002 inches.

After the alignment is complete the bearing bases and gear unit are drilled, taper reamed and the taper pins driven in place.

The dummy flanges are then removed and the flexible coupling is assembled to the drive shaft and gear unit.

INSTALLATION

Falk Coupling

1. Clean shaft fit and apply key.

2. Apply coupling covers to shafts.

3. Apply and tighten hex nuts on each shaft. These nuts are self locking.

4. Insert cover gasket, letting it hang on the gear unit hub away from the teeth.

5. Slide the horizontal shaft until the opening between the hub faces is 1/8 inch.

6. Lock the shaft by turning the locking collars at each bearing. Tighten locking collar set screw.

7. Force as much grease (Marfak #3HD or equivalent) as possible down into the gap between the coupling faces as well as in the hub grooves.

8. Apply gridmember by spreading it slightly so that it will pass over the outside diameter of the coupling teeth. To accomplish this with the minimum amount of spreading, the gridmember may be started at either end of the rungs and should be tapped only part way into the slots. With all the rungs thus partially started in their respective grooves, the gridmember may then be tapped all the way down into place without further difficulty.

9. Pack the spaces between and around the grid with Marfak #3HD or equivalent.

10. Draw the covers together with the gasket in place and tighten coupling bolts. Make sure that the seals are squarely seated on hubs and not pinched under covers.

11. Add additional grease by means of grease gun to fittings provided in coupling.

Fast's Coupling

1. Clean both shaft fits and apply keys. Make sure the key is free of burrs and fits on its side for the entire length of the hub keyway. It must not bear on the top or bottom.

2. Slide the sleeves over the shafts before applying the hubs. Apply hubs and pull up tight with the hex nuts.

3. Apply spacer with gaskets between the coupling sleeves.

4. Apply flange bolts, lockwashers, nuts and tighten.

5. Lock the shaft by turning the locking collars at each bearing.

6. Remove oil hole plugs and pour in hot Crater Compound #1.

7. Apply copper gasket to oil plugs and tighten.

Fan Drive Assembly

1. Lower assembly through the fan opening in the roof and place on mounting frame.

2. Align the drive, idler and driven pulleys.

3. Bolt the fan drive assembly to the mounting frame and spot weld in place.

4. Slip belt over the pulleys and tighten the idler pulley to obtain belt tension.

5. Apply fan and shutters.

TRACTION MOTOR BLOWERS

REMOVAL

To remove the front blower on the 660 HP unit, back off the idler pulley, slip off belts and remove the blower mounting bolts.

On the 1000 HP units, follow the same procedure, but it will be necessary to remove the guards and also disconnect the blower from the radiator compartment bulkhead.

On rear blowers, disconnect coupling, remove mounting bolts and pull unit out through the cab.

INSPECTION AND MAINTENANCE

The fan on the inside of the housing should be checked for misalignment. Make sure that it is not rubbing against the housing at any point. Check pillow-blocks for wear also that the cam lock is secured and that the set screws are tight against the shaft. If the set screws are loose and the shaft has been rotating in the bearings, it may be necessary to replace the shaft.

Since the pillow-blocks are self aligning make sure that they have not become frozen in their old position, otherwise difficulty will be encountered in aligning them when they are reinstalled.

DISASSEMBLY AND REASSEMBLY

After unit is removed from locomotive, remove pulley with a puller, loosen set screws on pillow-blocks and tap them off with a hammer. Remove bolts from the shroud rings on both sides of the blower housing and pull out fan.

Assemble in reverse order. Make sure that the bearings are properly greased; the fan rotates freely and does not strike the housing.

INSTALLATION

After the blower is in place, align the blower pulley with the engine pulley. Replace belts, tighten mounting bolts and adjust the idler pulley for proper belt slack.

On the rear blower, place the blower in position and align the coupling.

EXCITER-AUXILIARY GENERATOR SET

REMOVAL

The exciter-auxiliary generator set is located on the floor in the electrical control compartment on the fireman's side. To remove the set, first remove the panel from the left side of the locomotive which encloses the unit.

Disconnect the drive shaft at the coupling. It will not be necessary to remove the belts or pulleys unless inspection or replacement is necessary. Disconnect all wiring. Remove mounting bolts and then using wooden planks and pipe rollers, roll the unit out onto the running board of the locomotive.

DISASSEMBLY, MAINTENANCE AND REASSEMBLY

Refer to Page 1101.

INSTALLATION

Roll the set back into the compartment and position it on the mounting blocks. Align the coupling by shimming. Tighten mounting bolts, redowel and connect wiring.

TRUCKS - 1000 HP ROAD SWITCHER

STANDARD FOUR WHEEL SWING BOLSTER TRUCK

DESCRIPTION

The standard motor trucks are the 4-wheel swivel type, equalized trucks. They are built with a swing bolster and a one-piece frame, both of which are cast steel. Fig. 4-7.

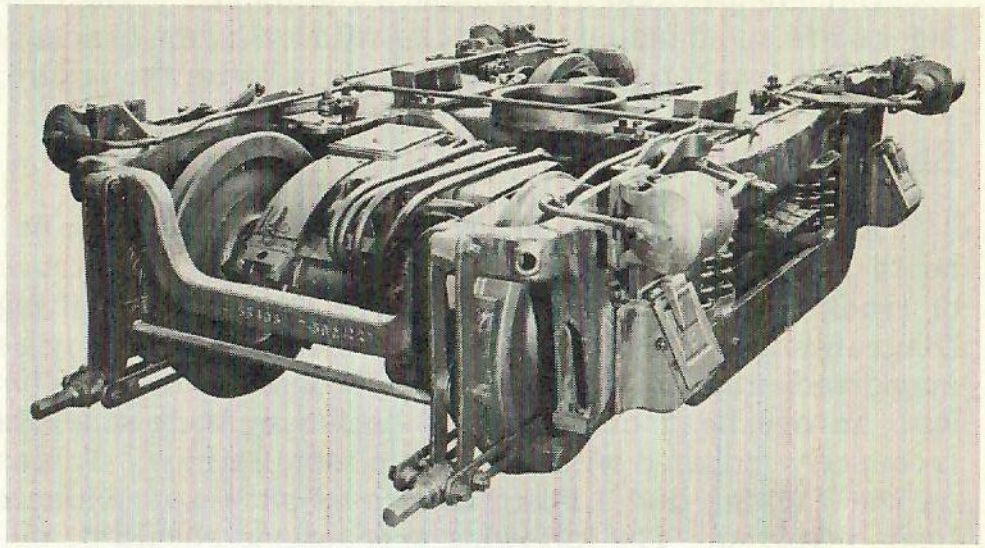

FIG. 4-7
1000 HP ROAD SWITCHER TRUCK

The swing bolster provides 2-1/4 inch lateral movement each side of center. In addition to the center bearing, there are two friction side bearings faced with wear plates cast integral with the bolster, to insure stability.

The spring arrangement is of the conventional design. The trucks are fully equalized, providing proper adhesive weight on both axles. The bolster is seated on two triple full elliptic springs, which are carried by a cast steel spring plank and two swing hangers pivoted in the frame. The frame is seated on four twin coil spring nests, which transfer the load through dropped equalizers to the axles. Both coil and elliptic spring systems are designed to carry the full load, which gives s smooth riding truck.

Axle journal boxes are mounted in pedestals cast integral with the frame. There is 1/4 inch lateral movement of each axle. All lateral thrust is taken directly through either axle end stops or Timken roller bearings. The traction motors drive the axles through a single gear and pinion. The motors are carried by journals on the axles and are nose mounted with coil spring mounting.

Unit clasp brakes are standard equipment. The cylinders are mounted on the trucks with cylinder brackets and brake hanger brackets cast integral with the frame.

REMOVAL

Before a complete truck can be removed from beneath a locomotive, it is necessary to relieve the truck or trucks of the chassis weight. The Jacking and Lifting Diagrams show the locations at which the unit may be supported either by jacks, a lifting rig used in conjunction with an overhead crane, or by stationary body supports frequently included with drop table installations. Tables on the Jacking and Lifting Diagrams show approximate loads involved. The following precautions should be observed: Wood blocking should be used between chassis support points and lifting devices and lifts should be uniform on both sides of unit. The chassis should not be lifted more at one end than at the other until the center castings have become disengaged from the truck center plates.

To remove an entire truck, disconnect the safety hooks, traction motor air ducts, air brake piping and traction motor leads. The lift required will be lessened if blocking is provided between journal box and pedestal tie bar so that the coil equalizer springs cannot raise the frame.

A truck may then be removed by three different procedures:

1. If a drop table is used the chassis should be supported either by stationary body supports bridging the table or by means of a lifting rig which requires an overhead crane.
2. Trucks may be removed laterally after raising the chassis sufficiently to disengage the center castings from truck center plates and to provide proper clearance above the trucks. Use either a lifting rig or jacks.

3. Trucks may be removed longitudinally along the track after raising the chassis sufficiently to clear the draft gear housing or the pilot.

Refer to Jacking and Lifting Diagrams for details of lifts and loads involved.

If complete disassembly of the truck is contemplated, the bolster safety straps should be removed before taking the weight of the locomotive off the truck.

DISASSEMBLY OF STANDARD 4-WHEEL SWING BOLSTER TRUCK

1. Remove bolster safety strap. The bolster may then be lifted out.
2. Lift out elliptic springs and remove spring plank.
3. Slide spring plank gibs out of swing hanger slots.
4. Remove pedestal tie bars.

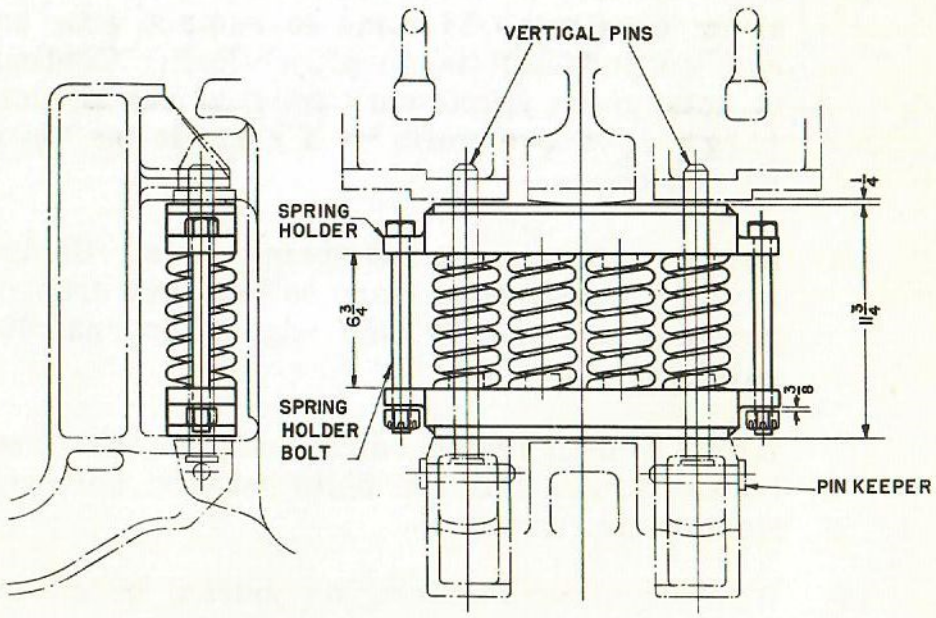

FIG. 5-7
TRACTION MOTOR NOSE SUPPORT

5. Loosen or remove brake hanger cross ties. Remove slack adjuster from brake hangers and bottom brake pull rods. Drop free ends of pull rods.

6. Using jack or crane hook lift traction motor sufficiently to compress motor nose suspension spring nest about 1/2 inch.

7. Remove cotters and tighten nuts on spring holder bolts, Fig. 5-7.

8. Lower traction motor to such a position that the motor lugs are free of the spring nest.

9. Remove pin keepers and drop out vertical pins which hold spring nest to truck frame. Spring nest may then be removed by sliding out sidewise.

10. Jack up traction motor noses enough to provide clearance between frame and motor lugs.

11. With crane, raise main frame sufficiently to allow equalizers to come in contact with and rest on pedestal flange projections. Continue to hoist main frame until equalizer ends clear slightly above walls of pockets in the top of journal boxes.

12. Remove coil springs and spring seats. Using a pry bar, spread equalizers so that they drop off pedestal projections onto edge of journal box equalizer pockets.

13. Lower main frame sufficiently so that inner bottom brake pull rod bolts may be removed. Remove pull rods.

14. With equalizers resting on journal boxes and clear of pedestal projections, main frame may now be raised free of traction motors, equalizers, axle, wheel and box assemblies.

INSPECTION AND MAINTENANCE

1. The following items should be inspected and compared with Fig. 6-7, Four Wheel Truck Clearances and Wear Limits:

   a. Vertical and horizontal steel liners on both body and truck center castings.

   b. Wear plates at the sliding surfaces between bolster and truck frame.

   c. Wear plates at the side bearings.

   d. Pedestal wearing faces and the corresponding faces on the journal housings.

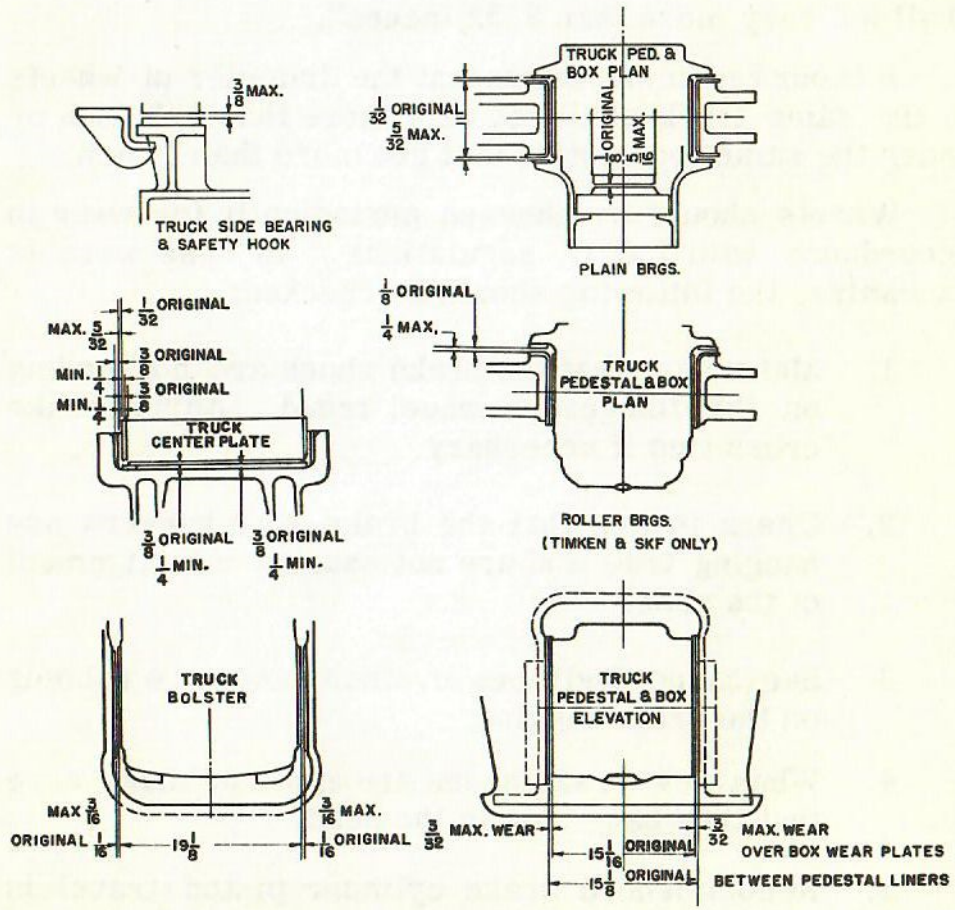

FIG. 6-7
CLEARANCES AND WEAR LIMITS

2. In the application of new liners be sure that all edges are rounded where they contact other surfaces.

3. Inspect the spring holders for wear and if necessary, replace the wear plates.

4. Brake rigging pins and bushings are hardened and ground. In case of excessive wear, pins and bushings should be replaced.

WHEELS

When turning or replacing wheels, the I. C. C. rule requires "the diameter of the wheels on the same axle shall not vary more than 3/32 inches".

It is our recommendation that the diameter of wheels in the same truck shall not vary more than 1/2 inch or under the same locomotive unit not more than 1 inch.

Wheels should be checked periodically for wear in accordance with I. C. C. regulations In case wear is excessive, the following should be checked:

1. Make sure that the brake shoes are not binding on the flanges or wheel tread. Adjust brake cross ties if necessary.

2. Check to see that the brake shoe hangers are hanging true and are not causing misalignment of the shoe.

3. See that no sand pipes or other parts are rubbing on the brake rigging.

4. When new brake shoes are applied, make sure that they hang true in the head.

5. Recommended brake cylinder piston travel is 2-1/2".

6. For wheel mounting refer to Fig. 7-7.

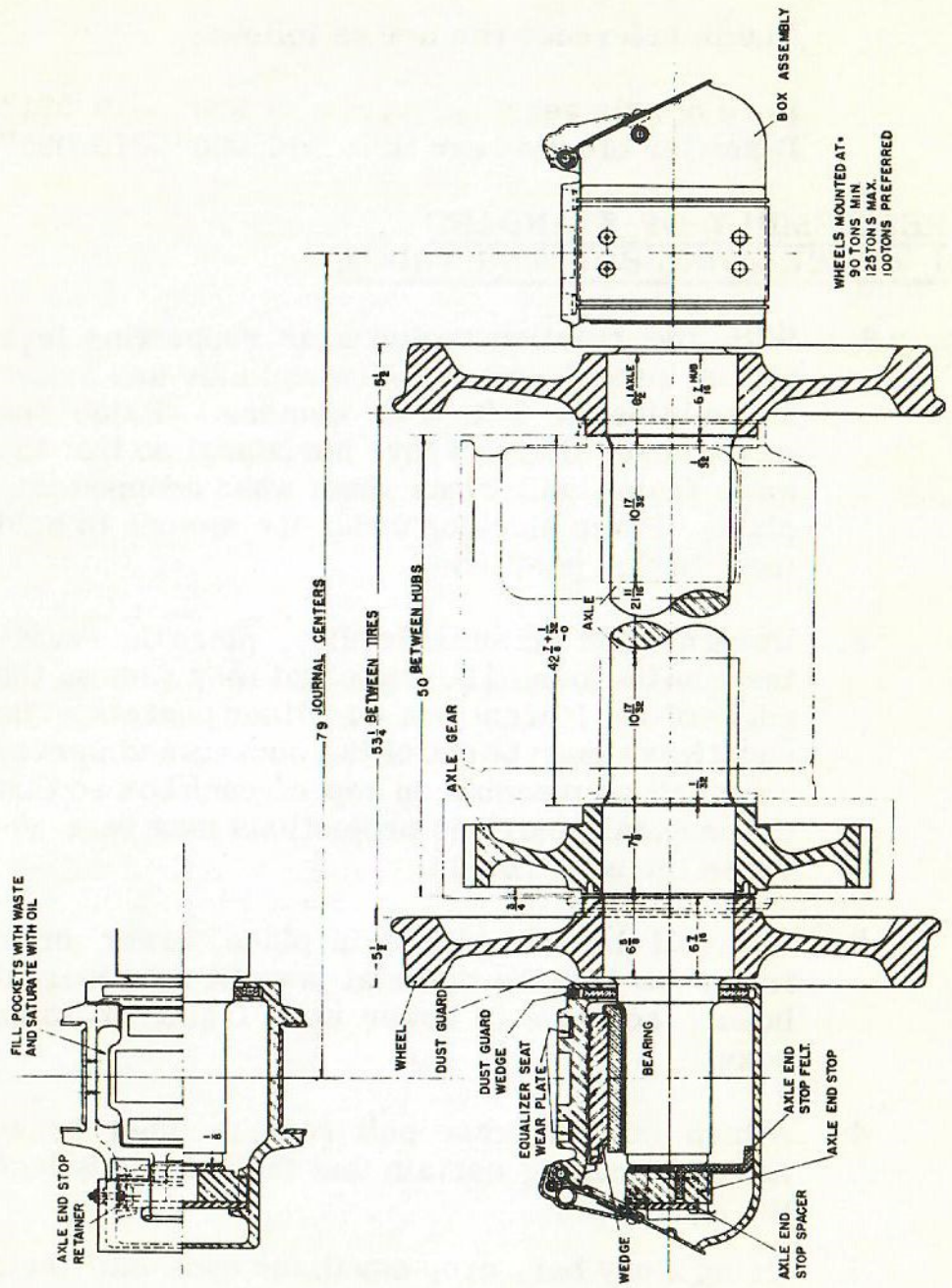

FIG. 7-7
WHEEL, AXLE AND BOX ASSEMBLY

7. The mounting of the axle gear is based on interference fit regardless of tonnage pressure.

   The interference fits are as follows:

   Bore of axle gear..... 9.990" - 9.991"
   Diameter of axle gear fit... 10.000" - 10.001"

REASSEMBLY OF STANDARD 4-WHEEL SWING BOLSTER TRUCK

1. With the traction motor nose supporting lugs facing inward, space the wheel axle and motor assemblies at 9 ft. 4 in. centers. Raise the motor noses slightly above horizontal so that the main frame will clear them when dropped into place. Place blocking under the motors to hold them in this position.

2. Using a crane and suitable sling, place the equalizers on the journal boxes so that they rest on the edges of the journal box equalizer pockets. The equalizers must be out of the pockets and spread as much as possible on top of each box so that the pedestals and their projections may pass between the equalizers.

3. With all brake hangers in place, lower main frame so that the pedestal jaws fit over journal boxes; continue to lower until frame rests on boxes.

4. Attach bottom brake pull rods to inner brake hangers making certain that the bolt heads face the equalizers.

5. Using a pry bar, drop equalizer ends into their journal box pockets.

6. Place the coil spring seats in their proper position between the equalizers. Bolt seats in place and apply plates.

7. Raise main frame until pedestal projections contact equalizers. Insert coil springs and apply upper wear plates. Drop main frame onto coil springs and apply pedestal tie bars.

8. Place spring plank gibs in swing hanger slots. Apply spring plank seats and wear plate to gibs. Lower spring plank into position. Lower elliptic springs into position on spring plank.

9. Lower bolster onto elliptic springs. Bolster safety straps cannot be applied until locomotive weight is placed on bolster.

10. Apply slack adjusters to outer brake hangers and attach pull rods and hanger cross tie bars.

11. Raise traction motor nose so that suspension spring next may be slid in between lugs of motor and frame. Push vertical pins into the spring nests from the bottom and apply pin keepers.

    NOTE: Be sure to back off nuts on spring holder bolts so that spring nest can expand to its limit between holding lugs. Nuts should then be backed off 1/4" further and cottered.

12. Lower traction motor nose so that it rests on suspension spring assembly.

REAPPLICATION OF TRUCK TO LOCOMOTIVE FRAME

The procedure of reapplying a locomotive truck to the body of the locomotive is essentially the same as the reverse of removal.

When any of the previous methods of removal are used and the truck is returned beneath the locomotive, the following should be observed:

1. Position the truck under the locomotive so the side bearings and center bearing line up with the matching equipment on the locomotive frame.

2. Lower the locomotive to the truck, taking care to guide the center bearing into position.

3. Reassemble the air line connections.

4. Reassemble traction-motor blower ducts.

5. Assemble side bearing safety hooks.

6. Connect traction-motor leads to generator leads coming from locomotive chassis.

7. Connect hand brake chains.

8. Reassemble axle generator connection cables if truck is so equipped. Make certain that no tools, rags or blocking equipment remains on the truck or locomotive chassis.

660 AND 1000 HP STANDARD SWITCHER

Four Wheel Rigid Bolster, Pedestal Type Truck

DESCRIPTION

The standard trucks are the 4-wheel swivel type, equalized trucks. They are built with a one piece frame of cast steel. Fig. 8-7.

The trucks are fully equalized, providing proper adhesive weight on both axles. The frame is spring supported through parallel arrangement of coil and semi-elliptic springs on two equalizers on each side. The spring arrangement is designed to carry the full load and insure a smooth riding truck.

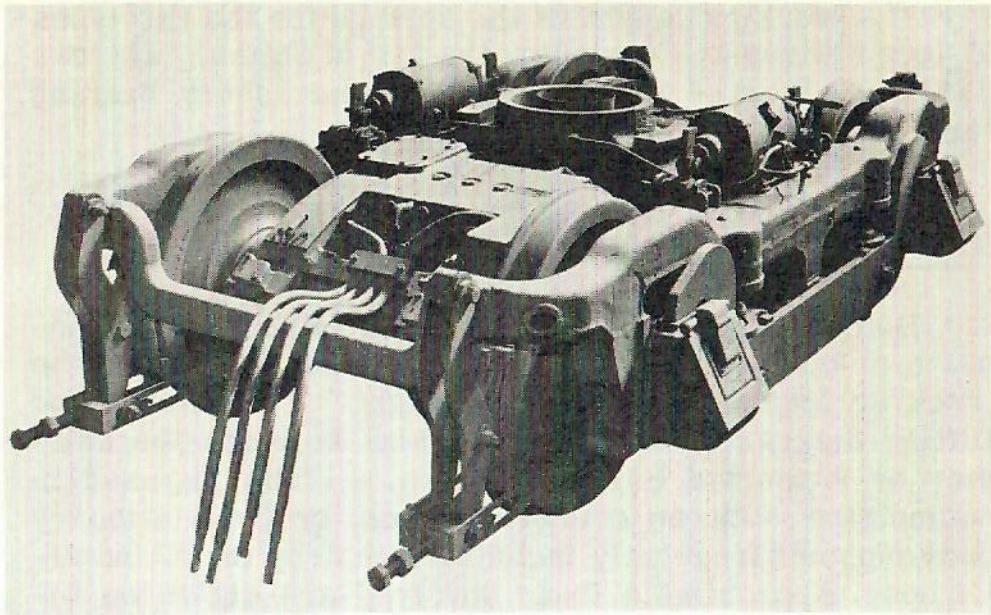

FIG. 8-7
660 AND 1000 HP SWITCHER TRUCK

In addition to center bearing, there are two friction side bearings, faced with wear plates, cast integral with the frame. There are truck safety locks and swivelling limit devices at the side bearings.

Axle journal boxes are mounted in pedestals cast integral with the frame. All lateral thrust is taken directly through axle end stops. The traction motors drive the axles through a single gear and pinion. The motors are carried by journals on the axles and are nose mounted with coil springs. The motors are blown through the hollow bolster and center plate.

Clasp type brakes are standard equipment. The duplex cylinders are mounted on the trucks with cylinder brackets and brake hanger brackets cast integral with the frame.

Standard 4-wheel, rigid bolster, pedestal type trucks are interchangeable between the 660 HP standard switcher and the 1000 HP standard switcher with the exception of the working height of the springs and brake cylinders size.

The working height of the springs for the two types of locomotives are varied by the use of shims. The two different brake cylinders give the necessary braking force required for each locomotive.

REMOVAL

Before a complete truck can be removed from beneath a locomotive unit, it is necessary to relieve the truck or trucks of the chassis weight. The Jacking and Lifting diagrams show the locations at which the units may be supported either by jacks, a lifting rig used in conjunction with an overhead crane, or by stationary body supports frequently included with drop table installations. Approximate loads involved are shown on the Jacking and Lifting diagrams. The following precautions should be observed: wood blocking should be used between chassis support points and lifting devices. The lift should be uniform on both sides of unit to prevent unnecessary strain on cab structure. The cab should not be lifted more at one end than at the other until the body center castings have been disengaged from the truck center plates.

To remove an entire truck disconnect the safety hooks, hand brake chain, air brake piping, traction motor leads, and axle driven equipment as necessary. A truck may then be removed by three different methods as follows:

1. If a drop table is used the chassis should be supported either by hoist equipment or by means of a lifting rig which requires the use of an overhead crane.

2. Trucks may be removed laterally after raising the chassis sufficiently to disengage the center castings from the truck center plates and to provide proper clearance above the trucks. Use either a lifting rig or jacks.

3. Trucks may be removed longitudinally along the track after raising the chassis sufficiently to clear the vestibule steps and the pilot. The lift required will be lessened if pilot and vestibule steps are removed.

Refer to Jacking and Lifting Diagrams for details of lifts and loads involved.

Disassembly of 4-Wheel, Rigid Bolster, Pedestal Type Truck

1. Remove traction motor air duct from between motors and bolster.

2. Remove pedestal cap bolts and cap.

3. Using jack or crane hook lift traction motors sufficiently to compress nose suspension spring nest about 1/2".

4. Remove cotters and tighten nuts on spring holder bolts (see Fig. 16-17 on page 1732 of TP-500 for diagram).

5. Lower traction motor to such a position that the motor lugs do not bear either top or bottom on the suspension assembly.

6. Remove pin keepers and drop out vertical pins which hold spring nest to truck frame. Spring nest may then be removed by sliding out sidewise.

7. Jack up traction motor noses sufficiently to provide clearance between frame and motor lugs.

8. Provide frame and equalizer clamping devices consisting of 8 - 1-1/4" diameter bolts 31" long threaded 6" long at each end with nut and 8 steel bars 18-3/4" x 3" x 1" each with a 1-3/8" diameter hole at each end. The holes to be 14-3/4" apart, center to center.

9. With the parts noted in item 8, compress the frame and equalizer assemblies by placing one of the bars on top of the frame, both sides and at each end of the brake cylinder so that the hole on one end of each bar is directly over the slot in the frame through which the top of the brake lever projects. Pass bolts down through the holes in the top bars, and through the slot until they hang with the lower end hanging beneath the bottom edge of the equalizers. Then pass bolts down through the holes in the opposite ends of the aforementioned bars, and on the outside of the equalizers. Apply the bottom bar to each pair of bolts underneath the equalizers and apply nuts.

10. Tighten nuts, top and bottom until springs are compressed a sufficient amount to remove pull rod pins on ends opposite slack adjuster past bottom edge of equalizer.

11. Remove pull rod pins at slack adjuster ends and remove pull rods.

12. With crane lift frame and equalizer assembly off wheel and axle assembly.

13. Release clamps, remove, and lift frame from equalizer assembly.

14. Remove springs and disassemble springs and equalizer assembly.

To Replace Springs - Both Coil and Semi-Elliptical

1. Remove traction motor air duct and pedestal caps as noted under general instructions for disassembly, and disengage motor nose assembly.

2. Drop pull rods at slack adjuster ends so that brake rigging is free.

3. Raise frame sufficiently to remove coil springs from pockets. Some elliptic may also be removed then from between equalizer.

INSPECTION AND MAINTENANCE

1. The following items should be inspected and compared with Fig. 9-7, Four Wheel Truck Clearances and Wear Limits:

   (a) Vertical and horizontal steel liners on both body and truck center casting.
   (b) Wear plates at the side bearings.
   (c) Pedestal wearing faces and the corresponding faces on the journal housing.

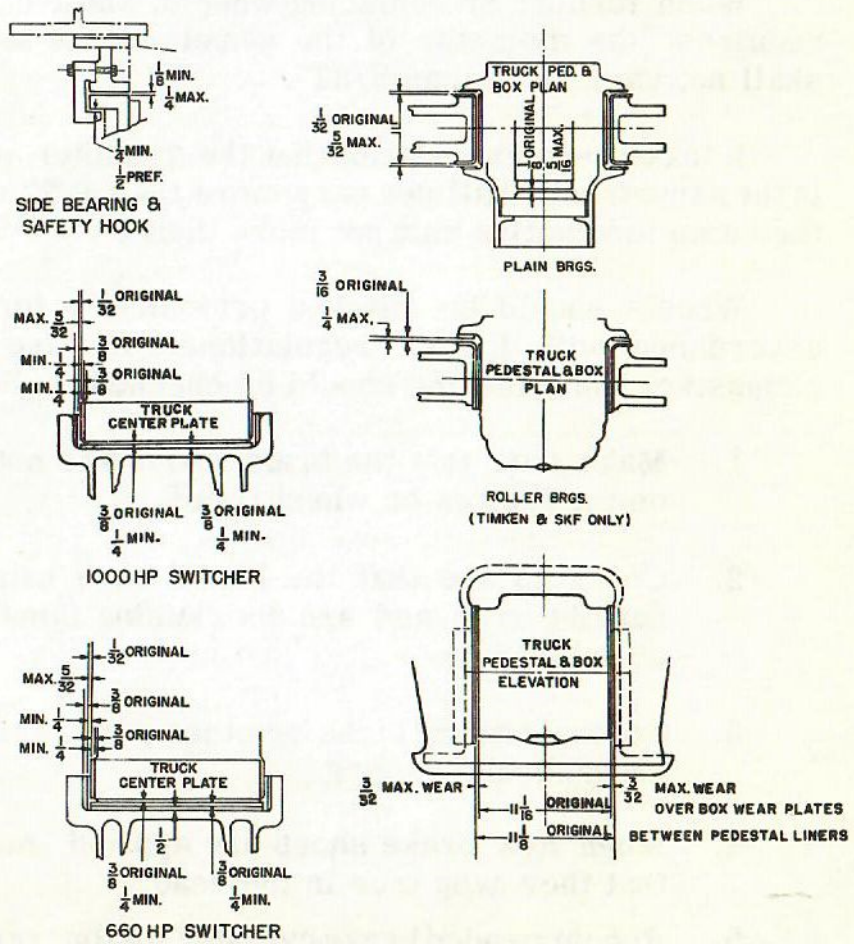

FIG. 9-7
CLEARANCES AND WEAR LIMITS

2. In the application of new liners be sure that all edges are rounded where they contact other surfaces.

3. Inspect the spring holders for wear and if necessary, replace the wear plates.

4. Brake rigging pins and bushings are hardened and ground. In case of excessive wear, pins and bushings should be replaced.

WHEELS

When turning or replacing wheels, the I.C.C. rule requires "the diameter of the wheels on the same axle shall not vary more than 3/32".

It is our recommendation that the diameter of wheels in the same truck shall not vary more than 1/2" or under the same locomotive unit not more than 1".

Wheels should be checked periodically for wear in accordance with I.C.C. regulations. In case wear is excessive, the following should be checked:

1. Make sure that the brake shoes are not binding on the flanges or wheel tread.

2. Check to see that the brake shoe hangers are hanging true and are not causing misalignment of the shoe.

3. See that no sand pipes or other parts are rubbing on the brake rigging.

4. When new brake shoes are applied, make sure that they hang true in the head.

5. Recommended brake cylinder piston travel is 2".

6. For wheel mounting refer to Fig. 7-7.

7. The mounting of an axle gear is based on interference fit regardless of tonnage pressure.

   The interference fits are as follows:

   Bore of axle gear..... 9.241" - 9.242"
   Diameter of axle gear fit.. 9.250" - 9.251"

Reassembly of Standard 4-Wheel, Rigid Bolster Pedestal Type Truck

The reassembly of this truck is just the reverse of the disassembly.

1. Assemble equalizers and replace springs.

2. Replace frame on equalizer assembly and clamp.

3. With crane lift frame and equalizer assembly and place on wheel and axle assembly.

4. Replace pull rods and pull rod pins.

5. Remove clamping devices.

6. Replace spring nose suspension assembly and place vertical pins into position. Replace keeper pins.

7. Replace pedestal cap and pedestal cap bolts.

8. Replace traction motor air duct.

REAPPLICATION OF TRUCK TO LOCOMOTIVE FRAME

The procedure of reapplying a locomotive truck to the body of the locomotive is essentially the same as the reverse of removal.

When any of the previous methods of removal are used and the truck is returned beneath the locomotive, the following should be observed.

1. Position the truck under the locomotive so the side bearings and center bearing line up with the matching equipment on the locomotive frame.

2. Lower the locomotive to the truck, taking care to guide the center bearing into position.

3. Reassemble air line connections.

4. Assemble side bearing safety hooks.

5. Connect traction-motor leads to generator leads coming from locomotive chassis.

6. Connect hand brake chains.

7. Reassemble axle generator connection cables if truck is so equipped.

Make certain that no tools, rags or blocking equipment remains on the truck or locomotive chassis.

GENERAL MAINTENANCE OF ELECTRIC ROTATING APPARATUS

Keep apparatus clean. Blow it out regularly with clean, dry compressed air. Wipe accessible parts with clean wiping rags; do not use cotton waste. Do not use air pressure in excess of 70 pounds and do not get nozzle too close to exposed mica insulation; small flakes of mica will be blown off, finally resulting in destruction of the insulation.

Prevent lubricant from getting on insulated parts, as it collects dirt and dust which reduce insulation resistance.

Electric connections must be tight. Clean the surfaces to which ground connections are to be made; rust and dirt prevent good electric contact.

Use Glyptal® No. 1201 red enamel on cables exposed to dirt or moisture.

Do not leave tools, bolts, nuts, etc. on or around the frames of electric equipment.

During inspection, watch for and correct:

1. Loose screws and nuts.
2. Cotter pins missing or not split.
3. Broken or weak springs.
4. Lubricants or dirt on insulating material, contacts or current-carrying parts.
5. Loose terminals and connections.
6. Broken or chipped insulators.

IN THE LOCOMOTIVE

Frequency of cleaning electric rotating apparatus depends on operating conditions. At least once a month, remove covers and blow out interior of the machine with dry, compressed air. Clean insulators on brush-holder supports and examine them for cracks, chipped

surfaces, or other defects. Remove accumulation of dirt, oil or grease from inside frame.

Every six months (more frequently, if necessary), clean the commutator string band, cables, connections and other accessible insulation on armature and field coils, by wiping with a cloth dipped in a suitable cleaning solvent. Take precautions in use of solvent. See below under SOLVENTS.

AT OVERHAUL

During overhaul, the following methods are available for cleaning electric rotating apparatus:

Vapor Degreasing

Cleaning is performed by the condensation of perchlorethylene vapor on the part to be cleaned, which is suspended above the boiling solvent. This produces a continuous rain of clean solvent on the part being washed, with the dirty solution draining off into the tank for reuse. Water-cooling coils around upper end of the tank prevent vapors from rising above top of tank and permits direct observation of the operation.

In operation, bring cleaning solution to a boil and allow vapor line to rise to the condenser coils at top of tank. Keep vaporized cleaning solution at a temperature of about 250 F, and lower the part to be cleaned into the vapor-laden atmosphere. Solvent condenses on the apparatus, attacking grease, oil and dirt, and flowing off in a steady stream, carrying the dissolved materials with it. To speed up the cleaning process, hot cleaning solution may be pumped and squirted on the apparatus to remove heavy accumulations.

If allowed to continue uninterrupted until temperature of apparatus reaches temperature of the solvent vapors, the solvent will attack the varnish and insulation; therefore, for cleaning only, introduce the apparatus intermittently to the cleaning vapor and withdraw and allow it to drain and cool.

Steam Jenny

A washing compound (such as water and Oakite) is heated until it is partly steam and then applied to the apparatus through a hose. Suspend the part to be cleaned over the tank and allow hot washing solution to flow from the hose over the apparatus. The hot solution dissolves oil and grease, and washes away dirt, loose varnish, etc. After apparatus has cooled and dried, blow off the white residue left by Oakite.

After electric apparatus has been washed by use of a steam jenny, bake the windings to remove all moisture, before applying varnish.

Solvents

For hand cleaning small machines, dip a clean, lintless cloth in the solvent and wipe off the part. Do not dip insulating materials in solvents; it may soak into insulation with injurious effects.

The different solvents in use are all dangerous materials; take proper precautions when using them. Be sure to use them in a well-ventilated area, avoid inhaling the fumes, and take precautions against fire. Avoid a concentration of fumes, both from danger of fire and possible injury to health of operator.

General cleaning solvents fall in the following categories:

1. For cleaning insulation - must be non-oily and quick drying, such as perchlorethylene.

2. For cleaning metal surfaces such as:

   a. Pinion and bearing fits, shaft tapers, etc., - must not leave an oily deposit on finished surface. Use perchlorethylene or Solvesso No. 100.

b. Anti-friction bearings - cleaner should not completely remove oil film from finished surfaces. Use kerosene, petroleum spirits, or other petroleum solvents.

Carbon tetrachloride is very dangerous when fumes are inhaled; the toxic effect builds up in the body and eventually causes serious injury or death. Under rigidly-controlled conditions, small amounts of this solvent may be used. Use carbon tetrachloride only outside in open air; special safety equipment is now available, consisting of air gun, ventilated helmet, etc., to reduce to a minimum the hazards involved.

OVERHAUL

Overhaul rotating apparatus as follows: Steps 2, 3, 4, 11, 12 and 19 do not apply to rotating apparatus other than traction motors.

1. Clean dirt away from around all openings, such as commutator covers, waste-chamber covers, and oil-filler pipes on axle caps, and around armature-bearing caps.

2. Measure radial wear and end play of axle bearings. Replace if wear exceeds limits recommended for these parts.

3. Remove old waste and oil from axle caps and wash them out with kerosene, or other petroleum cleaner. Repack with new waste.

4. Dismount motor from truck and remove pinion with hydraulic pinion puller.

5. Remove armature from frame. Blow out dust and dirt with clean, dry compressed air. Recondition per detailed instructions under ARMATURES and COMMUTATOR.

6. Examine bearing housing to make sure grease or oil leaks have not developed. Remove armature bearings and clean and inspect them. See BEARINGS.

7. Blow out frame assembly with dry compressed air and clean the interior of machine, wiping with a cloth dipped in suitable cleaning solvent to remove oil or grease.

   NOTE: In items 6 and 7 above, determine reason for presence of oil or grease, and correct it.

8. Make sure field coils are tight in magnet frame. If coils and connections are tight and in good condition, give them two coats of Glyptal No. 1201 red enamel; allow three to four hours after each coat for enamel to air dry. Also paint interior of frame with 1201 red enamel. If coils are removed, recondition them per instructions under FIELD COILS.

9. See that brush-holder mechanisms operate freely, that shunts and terminals are tight, and that insulators are clean and free from cracks. See that carbonways are not rough or worn. Check spring tension and adjust to value given under Maintenance Data. Replace defective springs. After overhauling, reassemble in frame.

10. See that pole-piece bolts are tight and properly locked. If they are removed, use new lock washers when reassembling.

11. Fill countersinks around top pole-piece bolt heads with G-E No. 837 compound to exclude water. (Traction motor only).

12. Replace wearing plate on motor-suspension nose, if worn to 3/8-inch thick or less. (Traction motor only).

13. Reassemble bearings and housings on armature shaft.

14. Reassemble armature in frame.

15. Adjust brush holders to correct spacing from the commutator. See Data Sheet. Check to see that carbonways are parallel with commutator segments.

16. Install a good set of brushes. Do not use brushes that are chipped or worn excessively.

17. Check all connections with connection diagram; be sure that they are tight and properly insulated.

18. Assemble accessories such as pinion or auxiliary gear.

19. Clean and repaint interior of gear cases with Glyptal No. 1201 red enamel.

20. Install machine in locomotive. See that nuts and bolts are tight and properly locked, covers fast, motor axle caps packed with new waste and filled with oil, cables secured and gear case supplied with sufficient lubricant of proper quality. Be sure axle-flange dust guard is assembled with the drain on the down side.

ARMATURES

Inspect armature for damage to bands, wedges, coils, insulation and commutator. Armature bands and core wedges must be tight and secure. Solder on the bands should be intact. If it has thrown off, determine the cause and correct it and replace the bands with new tight bindings. Coil insulation should be clean and free from blisters, flakes or cracked insulation varnish surface.

When treatment is necessary, or if the banding is loose, proceed as follows:

1. Clean air holes through the core. Clean creepage surfaces by wiping with a cloth dipped in cleaning solvent.

2. Remove bands and banding base, if necessary.

3. Clean all surfaces with a cloth dipped in a quick-drying, non-oily cleaning solvent and blow out with dry compressed air.

4. Heat armature in oven to 120 to 140 C (248 to 284 F). If bands were removed, apply narrow temporary bands to each end winding, using fiber base to protect windings.

5. Dip armature hot, 110 to 120 C, in Glyptal No. 2480 varnish; for viscosity, refer to PREPARATION OF VARNISHES. Hold it in varnish for five to ten minutes.

Hold motor armatures and small generator armatures on a swivel hook, with commutator end up; submerge armature in varnish up to commutator.

Large generator armatures, especially those with open-type risers, should be rolled in a pan of varnish. See Fig. 3-8. Bolt an adapter to the coupling flange to facilitate handling. Lift armature with cables having a spreader as shown and protect bearing fit on shaft by inserting a piece of fiber between cable and shaft. Lower armature until windings are immersed in varnish; rotate it slowly until all windings have been dipped. Spray inside surfaces of armature spider with same varnish.

NOTE: Be sure armature is low enough in varnish to fully immerse windings in bottom of slots.

6. Thoroughly drain excess accumulation of varnish from small armatures by spinning, and

wipe varnish from shaft, using a cloth soaked in solvent. Incline large armatures at an angle of about 45 degrees and drain about five minutes.

7. Bake for 16 to 18 hours at an oven temperature of 140 to 150 C (284 to 302 F); armature should be in a vertical position.

8. Measure insulation resistance while armature is hot. Bake armature until insulation resistance is at least one megohm.

9. Replace temporary bands with permanent binding.

10. Repeat items 5, 6 and 7, for second and third dip and bake.

If armature is in good condition, and banding has not been replaced, only one dip and bake is necessary. Clean armature as in steps 1 and 3 above; then bake it for six hours at 140 to 150 C (284 to 302 F) to remove moisture, and dip and bake as in items 5, 6 and 7 above.

Surfaces to be treated must be clean.

PREPARATION OF VARNISHES

Use Glyptal No. 2480 varnish for dipping armatures and Glyptal No. 1201 red enamel for field coils and painting other parts of rotating apparatus.

To obtain satisfactory penetration, bonding and curing, the viscosity of these finishes must be correct; use the G-E Zahn viscosimeter.

Equipment Required

1. Thermometer to measure temperature.

2. Stop watch.

3. Zahn viscosimeter. Use No. 3 Zahn cup.

4. Curve sheets for correcting viscosity to 77 F or 25 C. Glyptal No. 2480 varnish - use curve H-4781124 (See Fig. 1-8). Glyptal No. 1201 enamel - use curve H-2782562 (See Fig. 2-8).

Procedure

1. Mix material thoroughly and allow to settle for a few minutes to eliminate trapped air.

2. Immerse viscosimeter cup and let it remain for about a minute to allow it to assume the temperature of material.

3. Raise cup quickly by ring in end of handle and start stop watch at instant cup leaves surface of liquid.

4. Stop the watch at instant draining column first breaks from cup. The number of seconds measured is viscosity at temperature of material.

5. Correct viscosity as measured to viscosity at 25 C by using curve Fig. 1-8 for Glyptal No. 2480 varnish and curve Fig. 2-8 for Glyptal No. 1201 red enamel.

   The viscosity desired is as follows:

   Glyptal No. 2480 - 67 to 90 seconds at 25 C with No. 3 Zahn cup

   Glyptal No. 1201 - 28 to 42 seconds at 25 C with No. 3 Zahn cup

6. If measured viscosity is not correct for 25 C as shown on curve, add solvent to decrease viscosity or add new stock to increase viscosity.

   CAUTION: Clean cup and its orifice after every reading and take care that stray lumps or skins

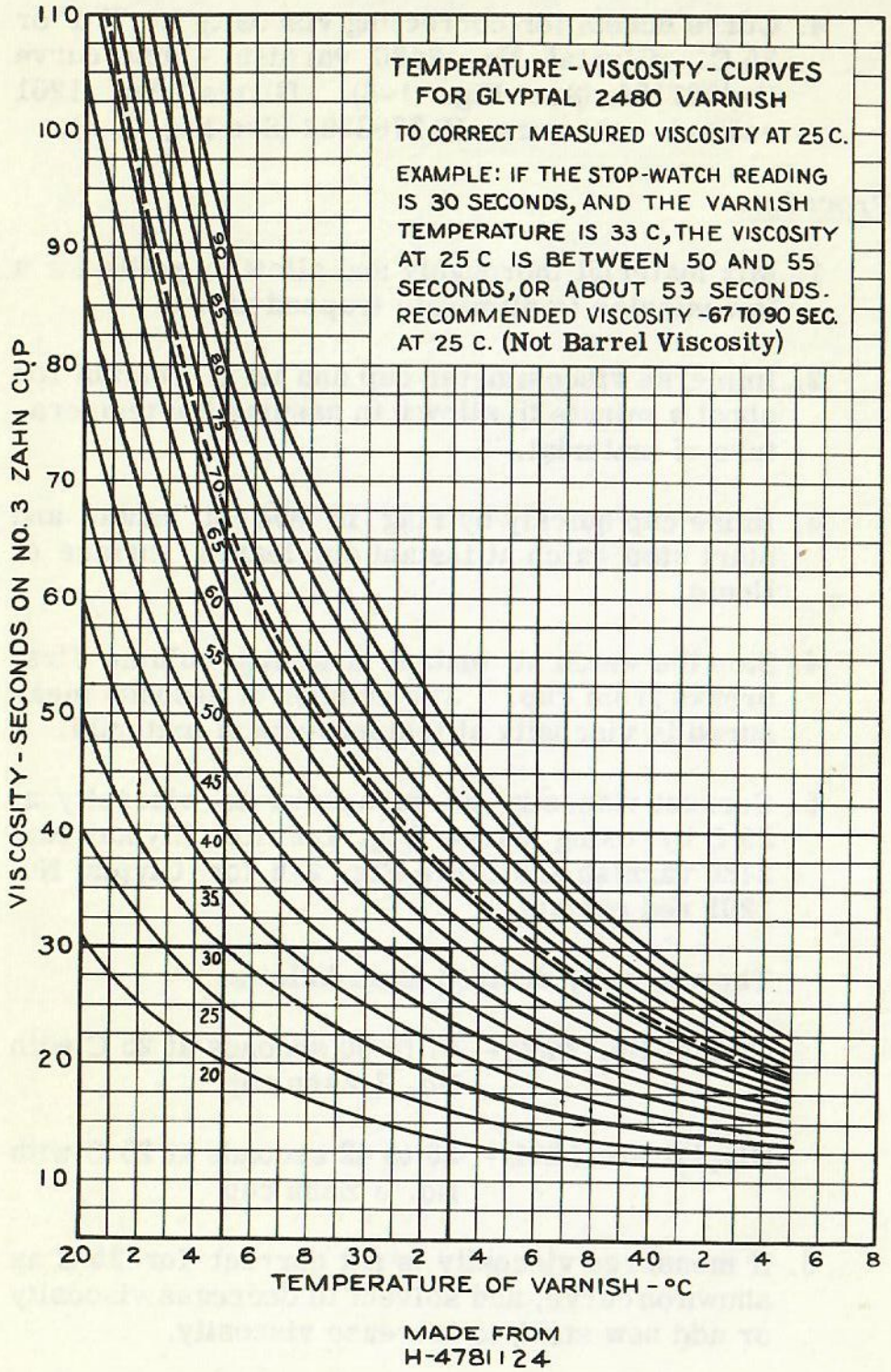

Fig. 1-8
Temperature-viscosity curve for Glyptal No. 2480 varnish.

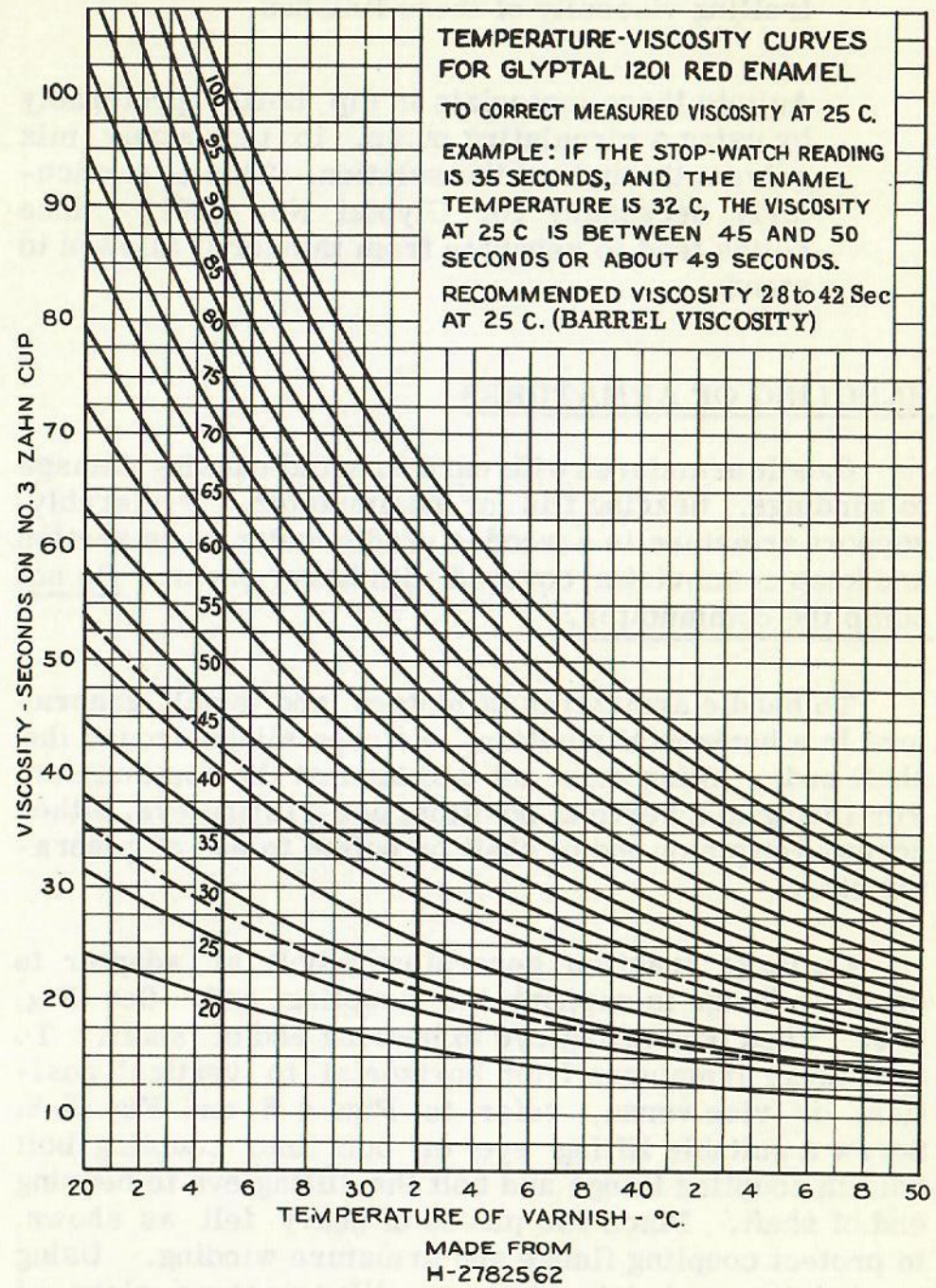

Fig. 2-8
Temperature-viscosity curve for Glyptal No. 1201 red enamel.

in liquid do not prolong cup draining time. Use Toluol or Solvesso No. 100 as a solvent for controlling viscosity of these finishes.

Agitate these materials in dip tanks, preferably by using a circulating pump, to thoroughly mix solvent throughout the solution. This is particularly necessary for Glyptal No. 1201, since solids tend to separate from thinner if allowed to stand.

HANDLING OF ARMATURES

Handle armatures with care to avoid causing damage to windings, bearing fits or commutator. Preferably, support armature in a wooden cradle under core section and keep commutator covered with heavy paper. Do not bump the commutator.

To handle armatures of motors and small generators in a horizontal position, use rope slings around the shaft ends. Sling must not pull against the commutator. For lifting in a vertical position, use a lifting eye, either screwed on pinion end of shaft or bolted to end of generator shaft.

On large traction generators, bolt an adapter to coupling flange to support the coupling end. See Fig. 3-8. Then bolt lifting eye to bearing end of shaft. To turn these armatures from horizontal to vertical position, or vice versa, refer to Fig. 4-8 and Fig. 5-8. Screw a suitable lifting eye or bolt into coupling bolt hole in coupling flange and bolt the lifting eye to bearing end of shaft. Place two pieces of heavy felt as shown, to protect coupling flange and armature winding. Using two hoists or a hoist and crane, lift armature clear of floor; then slowly raise commutator end to a vertical position, while keeping coupling end in same position. Follow reverse procedure to change armature from vertical to horizontal position.

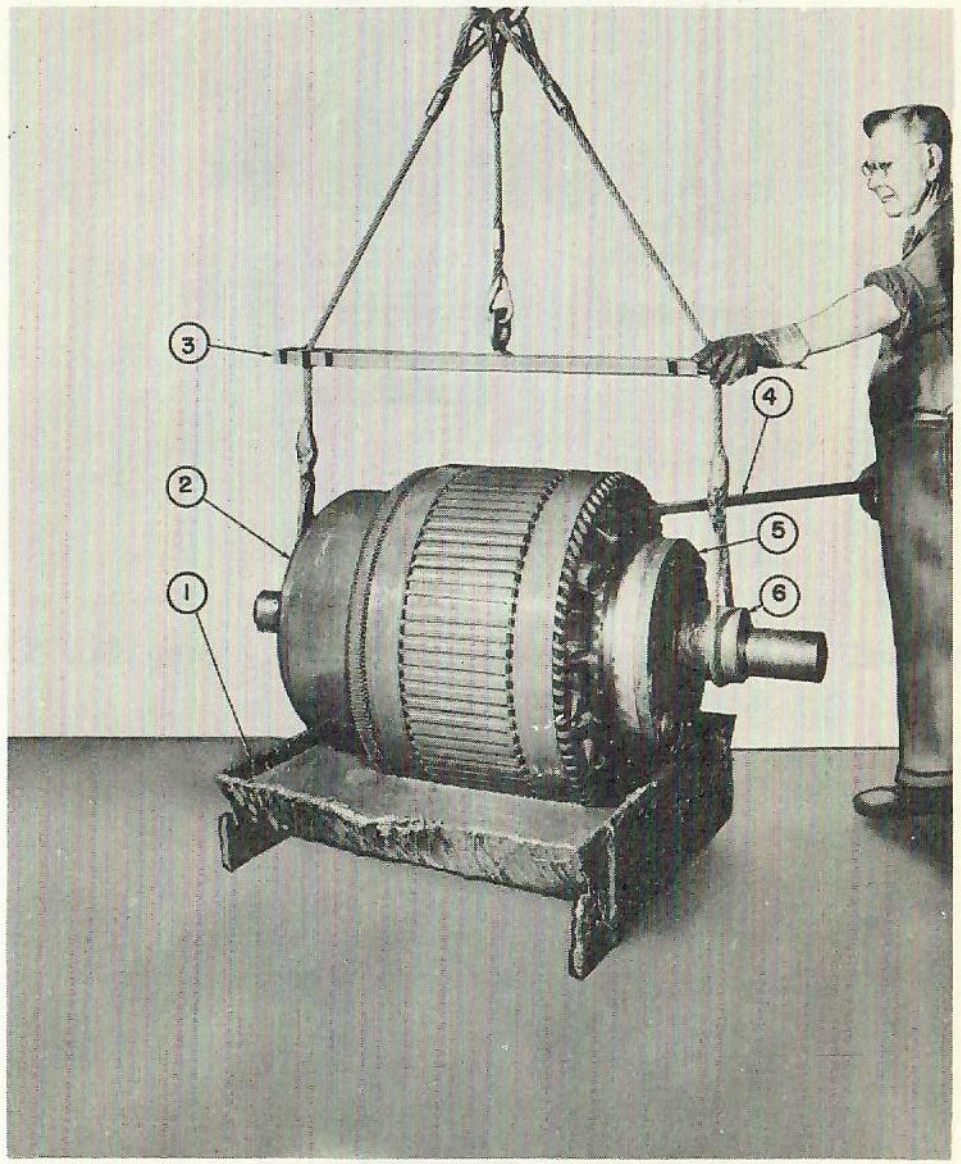

Fig. 3-8
Method of rolling generator armature in pan of varnish.

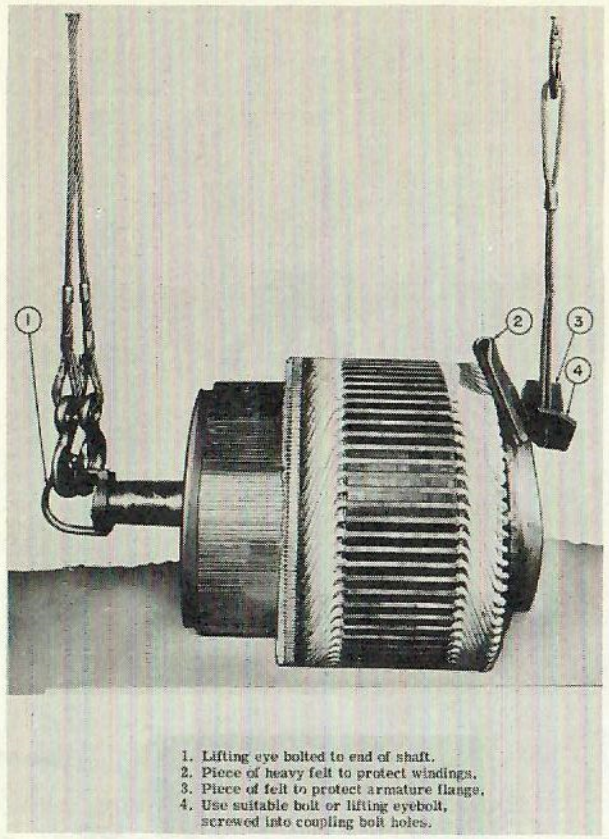

1. Lifting eye bolted to end of shaft.
2. Piece of heavy felt to protect windings.
3. Piece of felt to protect armature flange.
4. Use suitable bolt or lifting eyebolt, screwed into coupling bolt holes.

Fig. 4-8
Method of turning generator armature. Step No. 1.

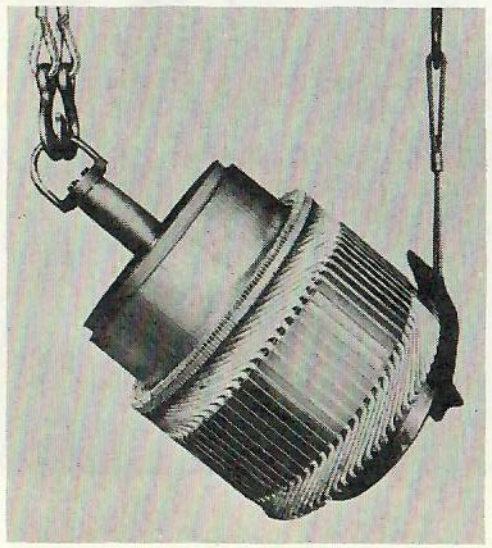

Fig. 5-8
Method of turning generator armature. Step No. 2.
Armature partly turned.

DYNAMIC BALANCE

To eliminate vibration and to protect bearings, commutator, etc., dynamically balance the armature after following repairs:

1. Armature rewound, or armature coils repaired.
2. Armature rebound.
3. Armature dipped and baked.
4. Repairs to commutator other than tightening and turning.

COMMUTATORS

Keep commutator surface clean, smooth and polished. Do not use oil or grease; brushes contain sufficient graphite to maintain proper lubrication. Oil or grease between segments will collect carbon dust and cause short circuits.

High mica between segments causes arcing at brushes. When this condition exists, due to worn commutator:

1. Remove armature from frame.
2. Turn or grind commutator.
3. Undercut mica. For depth see MAINTENANCE DATA.
4. Finish grind and polish commutator.

String band must have a smooth glossy finish. Wipe it clean every month and every six months apply a coat of Glyptal No. 1201 red enamel.

SANDING

If commutator is slightly rough, dirty or blackened, use a fine grade of sandpaper, 00 or finer, and finish surface.

1. Run machine about 1/3 normal rated speed.
2. Hold sandpaper against surface and apply a slight pressure evenly, traversing back and forth across surface until it is cleaned.
3. Blow out dust and sand with clean dry compressed air. Use maximum pressure of 70 pounds.

   CAUTION: Never use emery cloth on a commutator.

GRINDING (Without Removing Armature)

Commutators which operate at relatively low peripheral speeds (3600 fpm) may be resurfaced with a hand stone, ground to fit radius of surface. Use a stone with a span of approximately 30 degrees.

1. Lift or remove brushes in front of stone.
2. Run machine at about 1/3 normal speed, no load. Hold stone lightly against commutator, slowly traversing it across surface. Pressure must be held evenly at all points. Take care not to leave commutator out-of-round.

Commutators which operate at relatively high peripheral speeds (4500 fpm) must be resurfaced with a rigidly-supported grinding fixture. Mount the grinder on an adapter which can be bolted to magnet frame of machine. Refer to instructions for particular machine for detailed methods.

After stoning or grinding, check commutator surface for concentricity, by using a dial indicator mounted

on the frame, with the pointer resting on the commutator. This indicator should have a sensitivity of 50 divisions, each 0.001 inch (or smaller) for one revolution of the pointer. Always check concentricity with armature mounted in its own bearing.

Commutator of traction generator must be concentric within 0.002 inch; commutator of traction motor and auxiliaries must be concentric within 0.001 inch.

TURNING

If surface is badly worn, burned or scarred, remove armature from frame and turn commutator as follows:

1. Remove armature from frame.
2. Place it in lathe, supporting it on its own bearings, if possible. If not, lathe centers must be true with bearing seats on shafts.
3. Cover windings to prevent entrance of chips and dust.
4. Set turning post with ways parallel to commutator and brace it securely. Use a side-cutting tool with points ground to 1/16-inch radius. Cutting side of point must be given considerably more rake for cutting copper than for iron or steel. Make clean, smooth cuts, without dragging copper over mica.
5. Rotate armature at speeds to give commutator surface 300-fpm peripheral speed, but do not burn the tool.
6. After turning, round off ends of bars to 1/16-inch radius with a file.

UNDERCUTTING MICA

1. Undercut mica to depth specified for each machine. Special saws of correct size are available. Do not enlarge slots when undercutting mica.

2. Remove sharp edges of bars with a hand scraper or knife. Do not bevel edges of segments.

3. Clean slots of chips and fins, using a piece of worn-out hack-saw blade or similar tool.

4. Blow out commutator with dry compressed air.

FINAL GRINDING

After turning and undercutting, grind commutator to obtain a smooth finish, concentric with armature bearings.

Most satisfactory method is to use a grinding machine having a rotating wheel and with the armature supported in its own bearings. Grinder is rigidly mounted on a traveling carriage and has a micrometer adjustment.

An engine lathe may be used. Mount grinder on the carriage to provide rigid support and means of adjusting the stone. Support armature in its own bearings.

Do not allow copper dust to get into windings. Wrap cloth over windings or use suction attachment to catch dust.

Always use a finishing-grade stone to make finish cuts. After completing cuts, traverse stone back and forth, without changing feed adjustment, until no cutting action can be noticed.

POLISHING

After grinding operation is complete, polish surface with a fine grade of sandpaper, 00 or finer, Crocus cloth, or 400A Triemite paper. Do not use emery cloth.

Blow out commutator with clean, dry compressed air (maximum air pressure 70 pounds) to remove dust, dirt or chips from slots between segments.

SOLDERING COMMUTATOR

When soldering leads to commutator risers, use only pure tin solder, GE-B20C2. If solder pot is used, best results are obtained when 1.25 to 2.5 per cent copper is added to the pure tin solder. Copper content of pot will increase as many commutators are soldered; add pure tin to maintain percentage of copper at or below the 2.5 per cent.

To provide a good solder joint, use G-E No. 291 soldering flux, which is a non-corrosive rosin and naphtha flux, which maintains its fluxing property during the time required to heat and solder the joint.

Best method of soldering commutators is by use of a large soldering pot; where this is not available, use a large electric soldering iron such as G-E Cat. 6A319 (115 volts, 1250 watts).

When Vee-bound commutators are soldered in a soldering pot, loosen the ring nut (or commutator bolts) before soldering, to avoid the danger of buckling the segments due to expansion. Place armature in press, apply pressure to commutator cap and loosen the ring nut or bolts a small amount; after soldering, press and retighten commutator. With arch-bound commutators, this precaution is not necessary.

TIGHTENING COMMUTATOR

Test for loose bars by tapping lightly with a 1/2-pound hammer. If loose, correct by tightening ring nut or commutator bolts.

CAUTION: Tightening a commutator requires extreme care. For detailed instructions, refer to General Electric Company.

SEASONING COMMUTATOR

On some machines, such as traction generators, assembly procedure includes a seasoning cycle of spinning, heating, pressing, etc. to set the mica cone insulation and produce a tight commutator. This same procedure should be followed whenever a new commutator is assembled on an armature or when an armature is rewound. If suitable equipment is not available to perform this seasoning, order a completely-seasoned commutator from the General Electric Company. Specific instructions for seasoning each commutator will be furnished on request.

AIR CURING COMMUTATORS

After a commutator has been stoned or turned, blow out the commutator slots, with armature rotating at normal operating speed and with full voltage applied across the commutator.

For specific instructions, refer to instructions for the individual machine.

Observe the following safety precautions:

1. Since maximum voltage will be reached on the machine, avoid contact with terminals or wiring.
2. Do not use a metal fitting on end of air hose. If a shut-off valve is used on hose, attach a length of hose on the end for proper protection.

3. Goggles must be worn during actual curing operations.
4. Workmen must wear rubber insulating gloves and stand on dry wood planking.
5. Person operating the controls must remain at control stand until work is completed and machine is shut down.

BRUSH HOLDERS

INSPECTION

Maintain clearance between bottom of brush holders and commutator as indicated in specific instructions for each machine. When adjusting the spacing, place a piece of cardboard or fiberboard between commutator and brush holder. After moving brush holder, be sure to tighten bolts to prevent it from working loose and dropping on the commutator while machine is running.

To adjust main-generator brush holder, loosen the bolt which secures it to the brush-holder support. Raise or lower the brush-holder to the proper position and tighten securing bolt.

To adjust a traction-motor brush holder, loosen clamp bolts sufficiently to permit moving the brush holder toward or away from commutator to obtain correct spacing.

Examine brush holders for damage caused by flashover or binding of the brushes. Brushes must slide freely in holders. Work the brush up and down several times to release any carbon dust or other foreign material which tends to cause binding. Do not snap the spring, as this may chip the brush.

At each inspection, check pressure springs to be sure they are adjusted to the same pressure. A brush or brushes which have the greatest pressure will carry more than their share of load, and this will result in excessive brush wear. Maintain pressure within limits specified for each machine.

Examine studs and insulators, both porcelain and mycalex, for evidence of chipping and cracking. Wipe them off at each inspection to remove any accumulation of carbon dust and dirt. Replace any defective insulators. Clean porcelain insulators with a cloth dipped in cleaning solvent. If mycalex insulators show evidence of burning from flashover, remove support from machine and file rough spots or beads smooth, using a fine file, then paint the mycalex insulator with Glyptal No. 1201 red enamel and air dry. Light burned spots may be removed in the machine by using a strip of sandpaper. Blow out machine after such repairs.

Inspect brush-holder springs, spring tips and copper shunts; repair or replace defective parts. The copper shunts (pigtails) of the brushes must be securely fastened to brushes and also to brush-holder body. If these shunts become broken or disconnected, the spring may have to carry the electric current from brush to brush holder, resulting in annealing of the spring and loss of brush pressure. All leads attached to brush holders must be fastened securely.

Before removing a brush holder, protect commutator with a fiber spacer placed between brush holder and commutator. To remove brush holder, first disconnect leads (bus ring or connector) from brush holder or support. Lift or remove brushes. In main generator and auxiliaries, remove capscrew which secures the brush-holder support to the frame. Then lift out the complete assembly of brush holders and support. In the traction motor, take out clamping bolts, remove clamp and lift out the assembled brush holder.

Installation of the brush holder is a reverse operation. Position the support so that face of brush holder is specified distance from commutator surface, assemble the capscrew with lock washer and draw it up securely. Assemble bus-ring terminal or connector and bolt it securely to brush holder or support. Install a good set of brushes.

RECONDITION BRUSH HOLDERS

1. Remove brush holders and supports from frame. In traction motor, keep each individual clamp with its own support, for reassembly in same position.

2. Clean brush holder by blowing it out with dry compressed air. Wipe off body and carbonway with a cloth dipped in solvent.

3. Check body casting for burned spots caused by flashover and file off beads or rough spots.

4. Check carbonway for size and smoothness. Brush must slide freely and yet be a close fit in carbonway. Replace brush holder when carbonway is worn enough to allow more than 0.020-inch clearance in thickness between brush and carbonway.

5. Wipe off insulators and examine them for cracks and chipped or burned spots on creepage surface. Replace defective porcelain insulators; file rough spots off mycalex insulators and apply a coat of Glyptal No. 1201 red enamel.

6. Examine stud insulation (traction motor) for damage and if necessary, repair or replace it.

7. Inspect pressure-arm assemblies. If copper tips are worn half-way through or, if shunt has been burned, broken or frayed, replace complete lever assembly. Examine springs for evidence

of overheating and be sure rivets are tight which hold tip and shunt to spring.

8. Check brush-spring pressure by using a 15-pound fish scale. With a new brush in the holder, place a piece of paper between lever tip and top of brush. Read pressure on scale when pressure between lever assembly and brush is reduced only enough to free the paper. See Fig. 6-8.

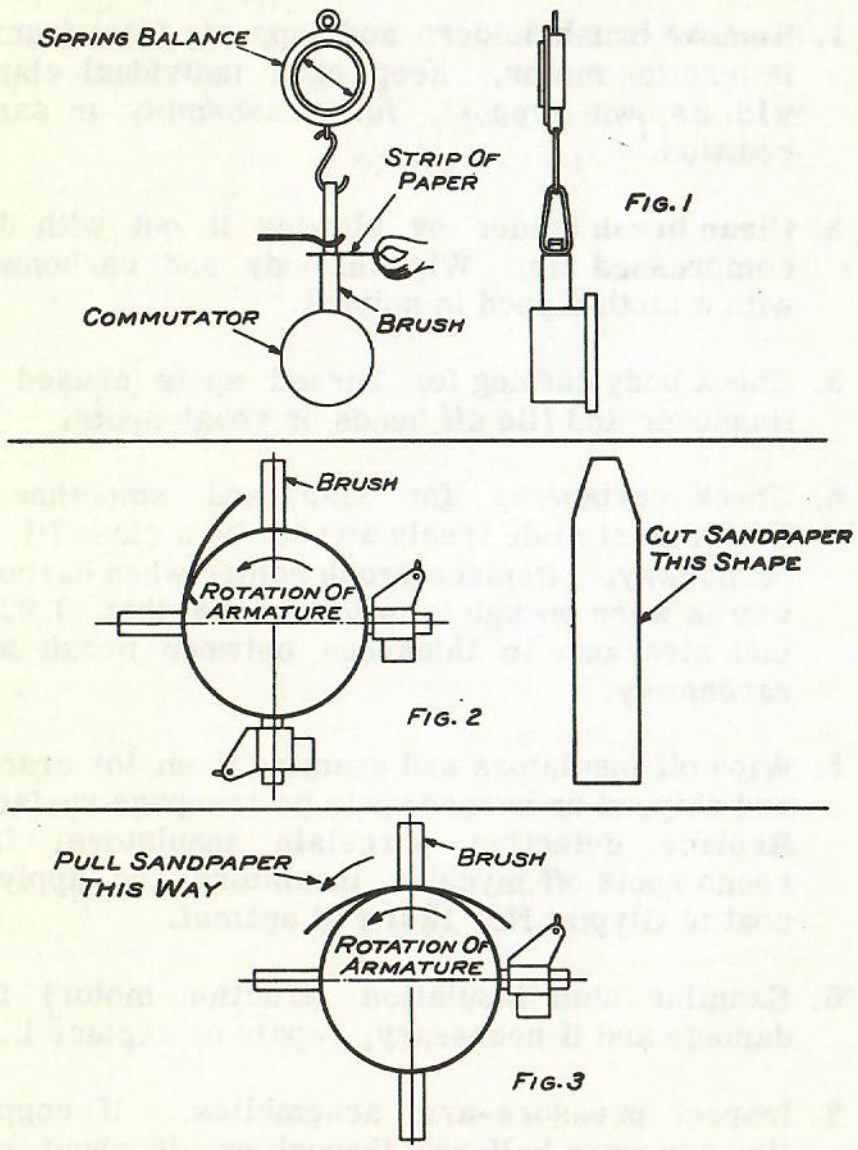

Fig. 6-8
Method of measuring brush pressure and sanding brushes.

BRUSHES

At inspection, check brushes for amount of wear and general condition; replace any which have worn nearly to limit of wear, are chipped or otherwise damaged. Use same grade of brush, or a G-E recommended substitute. Refer to Maintenance Data for limits of wear.

To install a new brush, lift brush lever and drop brush in place in brush-holder carbon box. Avoid snapping lever when placing it on top of the brush. Secure brush pigtail under terminal screw on brush-holder body. Be careful to arrange the pigtail shunts so that they clear the commutator riser on armature and the window in brush-holder body. Keep shunts away from steel parts, such as cover or magnet frame.

SANDING

When new brushes are installed, sand them in to fit the surface of commutator. Insert sandpaper between brush and commutator, with the rough side against the brush; see Fig. 6-8.

SEATING

When more than one-third of a set of new brushes are installed in a generator, seat them to a smooth fit. Run generator at engine-idling speed and hold a brush seater (Cat. 106X98) lightly against commutator; move it backward and forward in front of each set of brushes, to cover entire brush surface. After seater has been applied, blow off fine particles of dust, before placing generator back into operation at full voltage.

FIELD COILS

Treat field coils as follows:

1. To remove the coil, disconnect cables and remove pole-piece bolts. Remove coil and pole

through end of frame. Keep shims with their respective pole pieces so that they can be reassembled in the same position.

2. Thoroughly clean coils to remove dirt, oil or grease. Surface of coil must be free of oil and dust.

3. Heat coil to 100 C (212 F) to remove moisture, and paint, spray or preferably dip the coil in Glyptal No. 1201 red enamel. See PREPARATION OF VARNISHES for viscosity. Drain thoroughly.

4. Bake coil in oven for eight hours at 100 to 120 C (212 to 248 F).

5. Repeat items 3 and 4.

6. Clean terminals and contact surfaces of the coil and pole piece.

7. Reassemble poles and coils in frame, using original shims and new lock washers under pole-piece bolts. Before installing coils in frame, clean frame, and then paint interior surfaces, excepting pole seats, with Glyptal No. 1201 red enamel.

8. Connect cables and reinsulate connections in the same manner as originally insulated. Refer to connection diagram for the machine and check coil polarity.

9. Measure insulation resistance with a megohmmeter; if it is more than one megohm, apply hi-pot test between coils and frame.

After coils are reassembled in the frame, brush or spray the frame with an additional coat of Glyptal No. 1201 red enamel and allow it to air dry.

Assemble new coils, or coils which have been dipped and baked, into the frame while they are hot, 80 to 100 C (176 to 212 F), except those which are permanently assembled to pole piece. The hot coil has more give to it, allowing the pole piece to be pulled down tight against the frame.

After connecting coils according to connection diagram, check relative polarity by exciting field circuits. Adjacent poles of same field circuit should be of opposite polarity. This can be observed by means of a compass.

BEARINGS

CLEANING

Thoroughly clean all parts in petroleum spirits or similar solvent to remove hardened grease and dirt from bearings, housings and grease passages. During the washing, rotate balls or rollers in race, to carry solvent up into the cage and facilitate removal of old grease.

After bearings have been cleaned and inspected, wash them in a light mineral lubricating oil of SAE-10 grade, heated to 90 C (194 F), to prevent corrosion of the highly-polished surfaces. If bearing is not to be mounted immediately, protect it by wrapping it in oil-proof paper or equivalent.

INSPECTION

Inspect parts of bearings as follows:

1. Examine inner race under a good light. First look at the roller path and examine it for flaking or cracks; if either of these defects appear, reject the bearing. Examine for pitting, signs of wear or dirt denting. Electrical pits, if well scattered are not serious, but if any of the craters are raised around the edges stone them off (never use a file) before returning bearing to service.

Note any excessive amount of dirt denting, as this may indicate flaking of outer race. A mottled, but uniformly distributed pattern of denting present on inner race or rollers indicates that outer race has probably spalled or flaked. In such a case, scrap bearing, or return it to bearing manufacturer for further examination.

Examine side surfaces and bore of inner race for evidence of rubbing or turning on shaft. If there is such evidence, locate the cause, such as loose spacers or interference of housing parts causing them to rub against race. If there is evidence of heavy rubbing on side surfaces or of rotation on shaft, reject bearing.

On commutator-end bearing (traction motor) look for smearing on flange and thrust collar; this would also show up on ends of rollers. This smearing is usually caused by inadequate lubrication, but may indicate that inner race was cocked in housing during original assembly. Out-of-squareness will be further indicated by displacement of the roller contact on inner race.

2. Examine outer race and rollers (or balls).

Rotate rollers or balls with the fingers, to expose all surfaces; look for heavy denting which usually indicates a flaked race. Reject such a bearing.

Check condition of outer race further by holding one roller (or ball) between thumb and forefinger, and sliding it around the race. Large flaked areas can be detected by feeling the drag as roller is slid over the flaking. On roller bearings similar to SKF-46830, the cage and roller assemblies can be removed from outer race; center the cage in outer race and pull all rollers as far towards center of bearing as possible. Cage and rollers will then drop through, allowing a closer inspection of outer race.

There usually are circumferential bands on the rollers which are highly polished, varying in width and

not uniform on all rollers. This condition is not serious, as it is caused by particles of dirt becoming embedded in the cage bar and acting as laps. Frequently, these bands are very narrow, resembling circumferential cracks, but close examination under a magnifying glass will reveal that they are not.

Observe condition of outside diameter of race for evidence of spinning in housing; if present, take steps to improve the fit in housing by bushing the framehead and reboring it to correct dimension. If outer diameter of race is worn perceptively, scrap bearing rather than make an undersize housing.

Examine cages for wear; stand bearing in a vertical position and raise and lower cage to check this clearance. Excessive wear will also be indicated by a thin edge turned up on each cage bar by rollers. A small amount of wear on the cage is not detrimental, but since it is usually caused by inadequate lubrication, check other parts of bearing for damage which may warrant its rejection.

BEARING DEFECTS

1. Flaking or fatigue flaking

This condition occurs as a shelling or flaking out of the bearing surface. It may occur on bearing paths of both races and on the roller (or balls). When this condition is found, remove bearing from service. If flaking has not progressed far enough to affect other parts of bearing, larger size bearings should be returned to bearing manufacturer for salvage by replacing of defective parts. See Fig. 7-8.

2. Electric pitting

Caused by the passing of electric current between rollers and one or both races. Most frequent cause is motor flashovers. The arc burns a small crater into race or roller. If pitting is scattered over a large area,

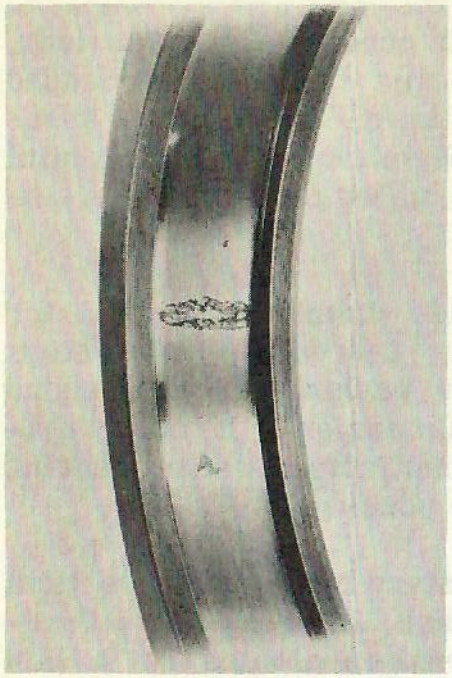

Fig. 7-8
Failure of outer race due to fatigue flaking. (Courtesy of S.K.F. Industries)

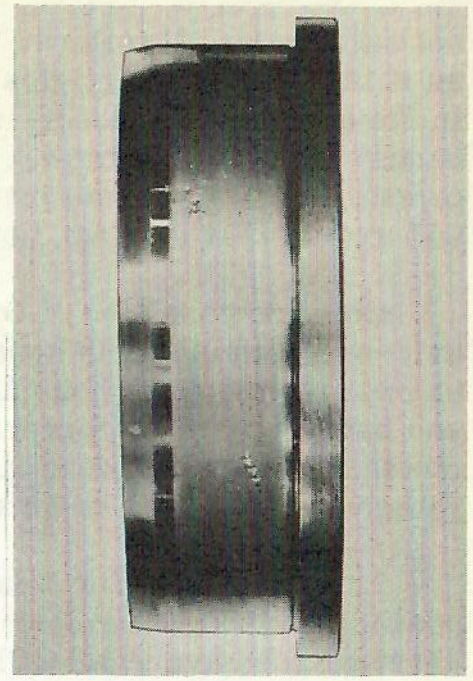

Fig. 8-8
Electric pitting of inner race. (Courtesy of S.K.F. Industries)

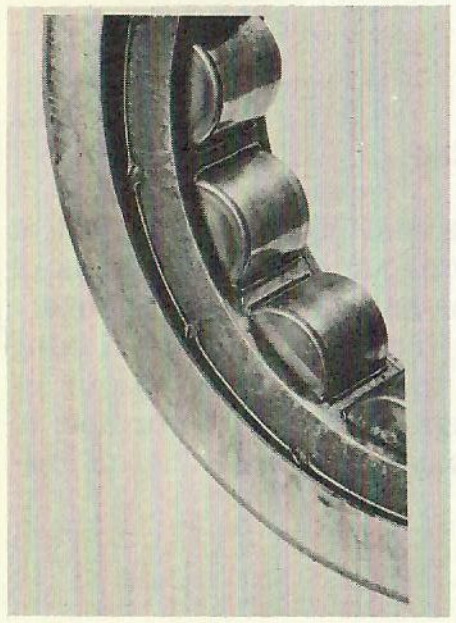

Fig. 9-8
Worn bearing due to lack of lubrication. Note fins on cage between rollers.

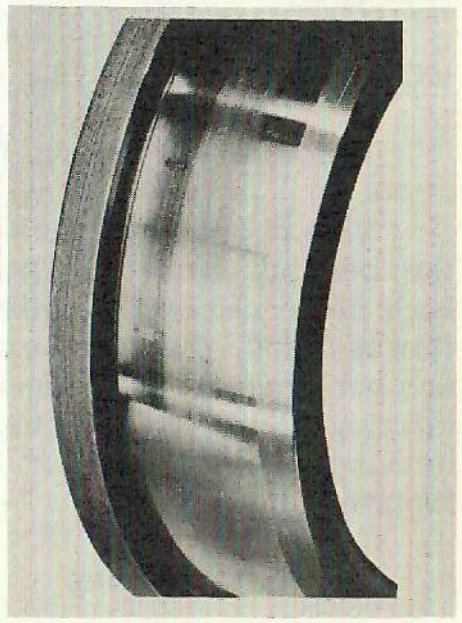

Fig. 10-8
Dirt denting of inner race - probably caused by flaked outer race.

no serious difficulties will result from continued operation. If, however, pitting is concentrated, reject such a bearing. See Fig. 8-8.

3. Smearing

This is a roughened surface condition caused by inadequate lubrication. In small amounts, it will not cause too much difficulty if lubrication is improved. To be safe, however, remove bearing and return it to manufacturer for possible salvage.

4. Wear

If bearing shows any appreciable amount of wear, remove it from service and either scrap it or return it for salvage. Anti-friction bearings with normal service do not develop appreciable wear on the parts. See Fig. 9-8.

5. Corrosion or corrosion pitting

Caused by moisture or some other corrosive agent which attacks the surface of bearings. Unsuitable lubricants which disintegrate in service may cause corrosion of bearing parts. Treat bearings same as for electric pitting.

6. Dirt denting

Caused by operation of bearing in a dirty atmosphere or dirty lubricant. It shows up as small dents and can be identified positively by observation with a magnifying glass. Where considerable amounts of dirt denting are found, look for flaking of a roller or race. Replace such a bearing and return it to manufacturer for salvage. See Fig. 10-8.

7. Overheating

The heat treatment of bearings during manufacture is a very carefully-controlled process. To overheat a

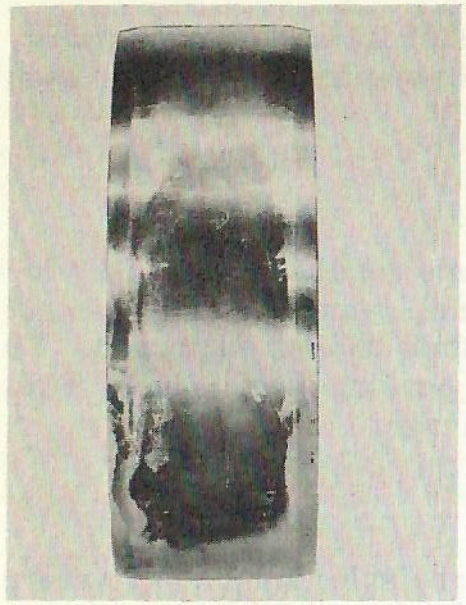

Fig. 11-8
Inner race abused by overheating. Do not exceed 275 F (135 C). (Courtesy of S.K.F. Industries)

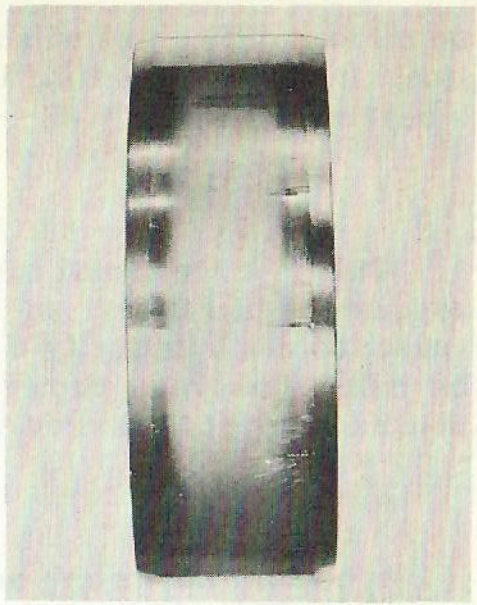

Fig. 12-8
Inner race scored during assembly by mounting with cocked outer race and rollers. (Courtesy of S.K.F. Industries)

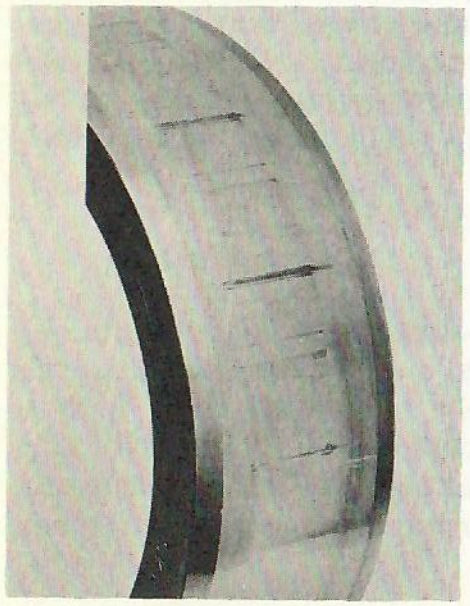

Fig. 13-8
Brinelling of inner race. Heavy lines probably indicate true brinelling.

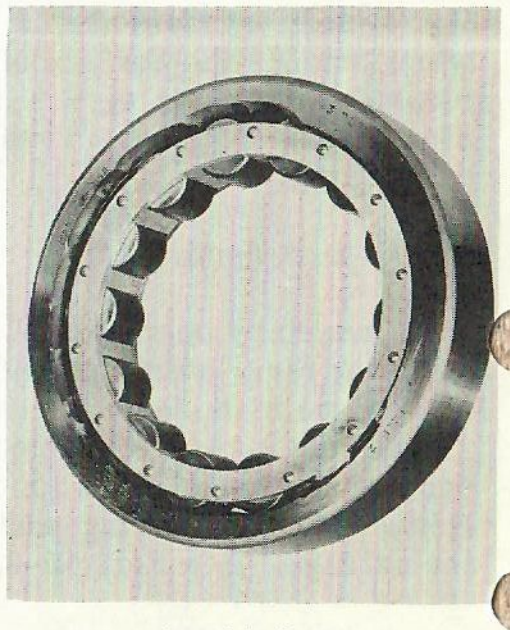

Fig. 14-8
Broken flange on outer race caused by striking end of shaft with a sledge.

bearing during assembly or disassembly will ruin it, because of distortion and softening of the steel, or, in the case of sealed bearings, damage to the lubricant. Never heat ordinary bearings to a temperature above 135 C (275 F) and sealed bearings should be governed by manufacturer's recommendations. See Fig. 11-8.

8. Scoring

Caused during assembly of armature in frame, by cocking the outer race so rollers are not parallel to surface of inner race. Each roller gouges a groove in bearing surface of inner race. Replace complete bearing. See Fig. 12-8.

9. Brinelling or false brinelling

Caused by vibration of a stationary armature or load, resulting in each roller or ball wearing a depression or groove in surface of race. This is indicated by a series of narrow lines separated by a distance equal to that between the rolling elements. See Fig. 13-8.

Light lines with no measurable depth indicate false brinelling which will not seriously affect operation of the bearing. True brinelling is indicated when these grooves have a measurable depth; in such a case, replace the complete bearing.

10. Broken flange on race

Caused by striking end of shaft with a sledge, during assembly or disassembly of pinion and other parts. Hardened flange may be broken as shown in Fig. 14-8 or only cracked, to fail later in service. Do not apply severe blows to end of armature shaft.

INTERCHANGEABILITY OF BEARINGS

Bearings for rotating apparatus are obtained from several different manufacturers. Bearings of the same size have the same shaft fit and housing fit, but internal

dimensions, such as outer diameter of inner bearing race, are different for each manufacturer. Therefore, bearing parts of different manufacture should never be interchanged; this is particularly true of the larger, heavy-duty bearings used in traction motor and traction generator.

Before reassembling an inner bearing race on an overhauled armature, check the corresponding outer race assembled in the frame housing to be sure that both parts were made by the same manufacturer.

REPACKING BEARINGS

During reassembly of a machine, have bearing compartment clean and dry, and repack it two-thirds full with clean, fresh, G-E ball-bearing grease. See Maintenance Data for each machine for amount of grease required for initial filling. When assembling the bearing, measure out specified amount of grease and distribute it over rollers (or balls) and in the grease chamber of inner and outer bearing caps. Do not overgrease.

CONVERSION TO SEALED LUBRICATION

Traction generators, traction motors and auxiliaries of this equipment have been equipped with grease pipes and grease fittings and lubricated with G-E ball-bearing grease, Type D6A2A3; locomotive lubrication charts and maintenance instructions are based on this condition, which requires periodic addition of grease to bearings.

Based on field experience, traction motors have been changed to sealed lubrication, and motors manufactured since June, 1950, have been lubricated with G-E ball-bearing grease, Type D6A2C4. This reduces maintenance by eliminating necessity of adding grease to bearings between overhaul periods.

When these older motors are overhauled, it is recommended that they be changed to sealed lubrication, as follows:

1. Remove bearings from shaft and thoroughly clean all parts of bearing and housing to remove all old grease. This is very important since D6A2C4 grease must not be mixed with any other grease.
2. Remove grease pipes and/or grease fittings from bearing housings and plug the tapped hole with a pipe plug. Seal the bearing to prevent the addition of lubricant between overhauls, in one of the following ways:
   a. Tack weld pipe plug to housing, using bronze welding rod.
   b. Weld a seal, similar to Cat. 8864006P1, over top of pipe plug; this seal bears instruction "DO NOT LUBRICATE". See Fig. 15-8.

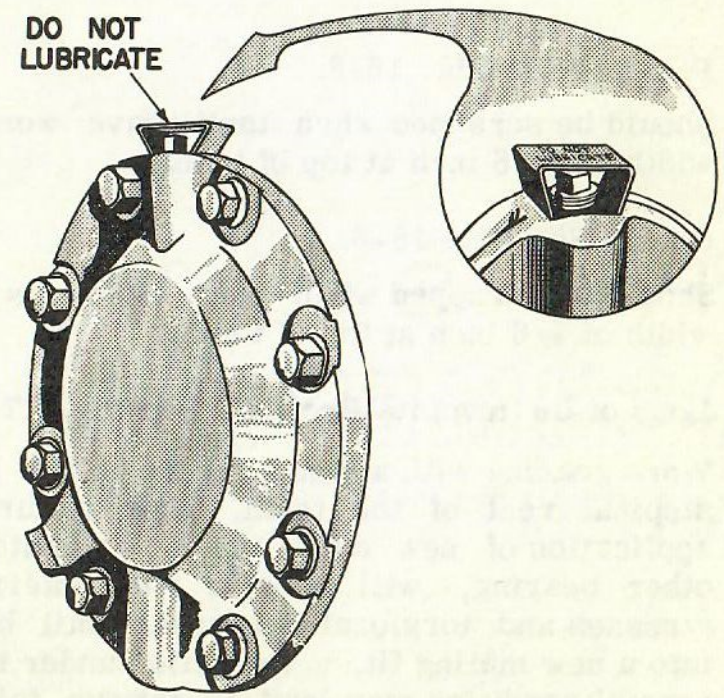

Fig. 15-8
Location of pipe plug seal on bearing cap.

c. Screw pipe plug in hole as far as possible; then, with a hack saw, cut off section of plug which protrudes above the housing.

3. On reassembly of bearing on shaft, pack it with the specified quantity of G-E ball-bearing grease, Type D6A2C4. DO NOT MIX D6A2C4 GREASE WITH ANY OTHER GREASE.

CONDEMNING LIMITS FOR RAILWAY GEARS

The service life of railway gearing depends very largely upon the type of service in which it is used and the quality of maintenance and lubrication which it receives. Gears in high-speed road service should be maintained to more rigid standards than is necessary for gears in switcher duty. Gears become unsuitable for further service for a variety of reasons, the most common of which, together with recommended wear limits, are as follows:

WEAR

1. Pinion - See Fig. 16-8.

   Should be scrapped when teeth have worn to a width of 1/16 inch at top of tooth.

2. Gear - See Fig. 16-8.

   Should be scrapped when teeth have worn to a width of 1/8 inch at top of tooth.

3. Loss of the Involute Profile - See Fig. 17-8.

   Worn gearing with a hump at the pitch line or steps at root of the teeth, when disturbed by application of new axle linings or mated with other bearing, will operate with interference stresses and torsional vibration until battered into a new mating fit. Operation under this abnormal condition may lead to fatigue failure of gear teeth and shorten the life of armature windings.

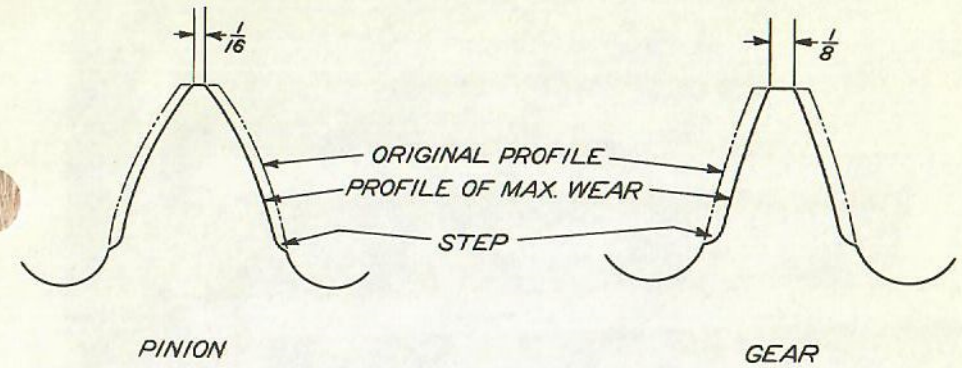

Fig. 16-8
Condemning limits for worn teeth.

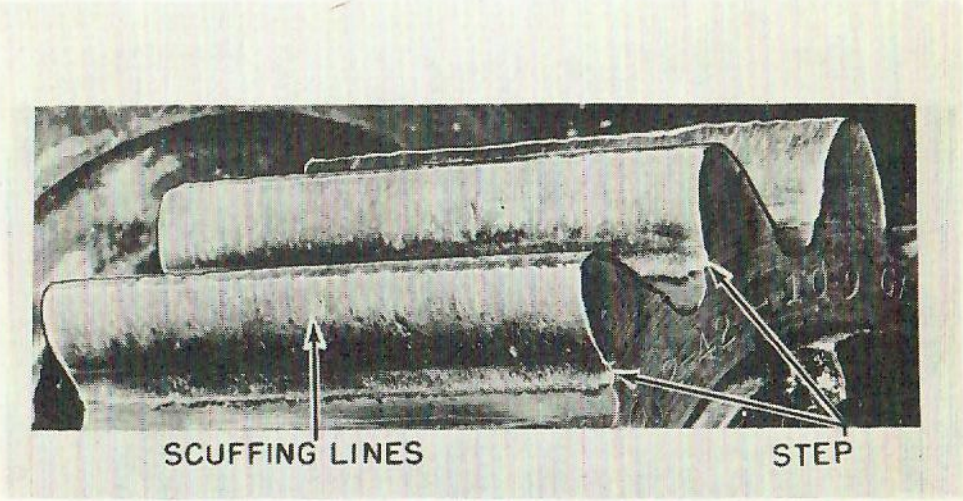

Fig. 17-8
Worn pinion showing step and scuffing lines on teeth.

PITTING

Pinions and gears should be scrapped when the working surface of the teeth is severely damaged by pitting or spalling to the degree shown in Fig. 18-8. Light pitting, as illustrated in Fig. 19-8, is a common condition and need not cause undue alarm.

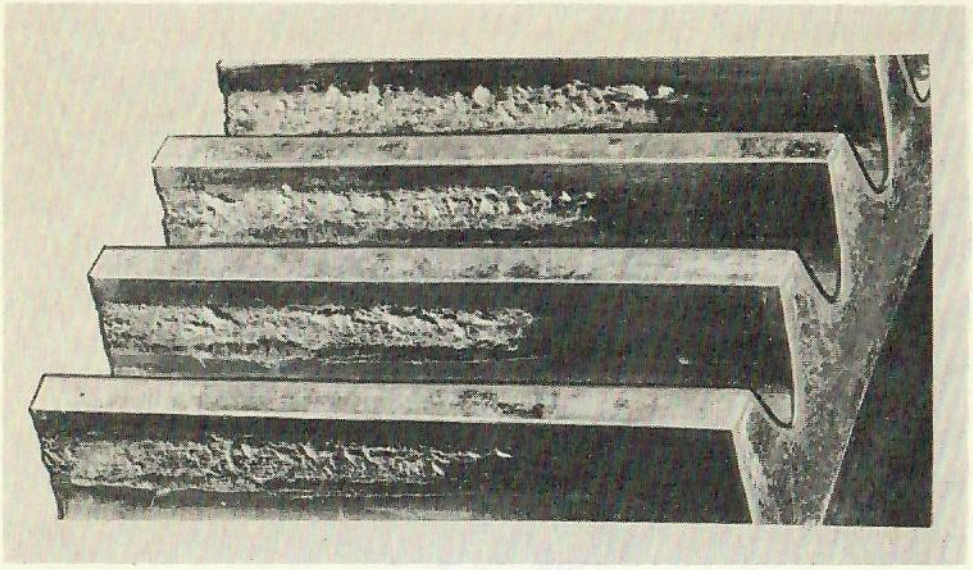

Fig. 18-8
Gear teeth severely damaged by pitting and spalling.

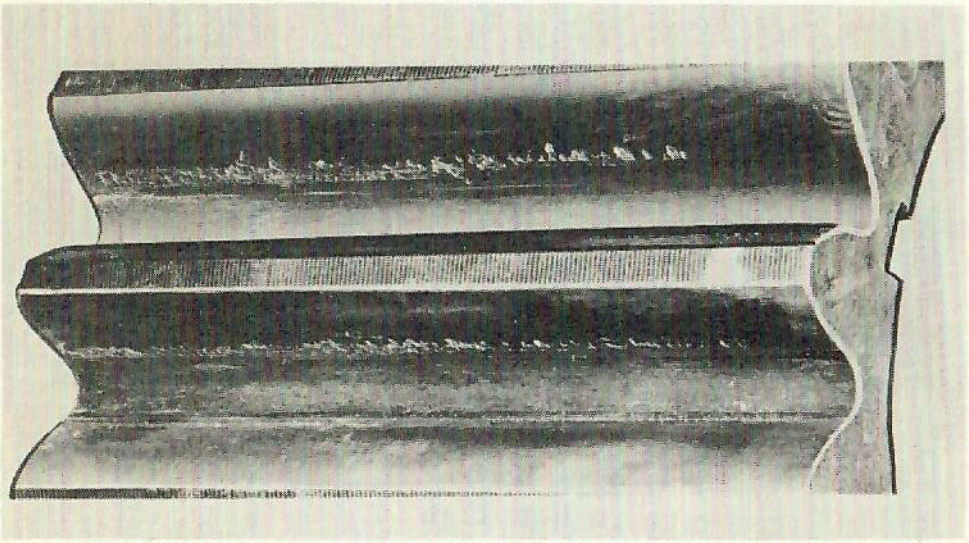

Fig. 19-8
Light pitting at base of pinion tooth.

SCUFFING

Light scuffing, shown in Fig. 17-8 and characterized by the vertical, root-to-tip lines, is an indication of faulty lubrication which, if not corrected, may result in ultimate destruction of the teeth. The heat

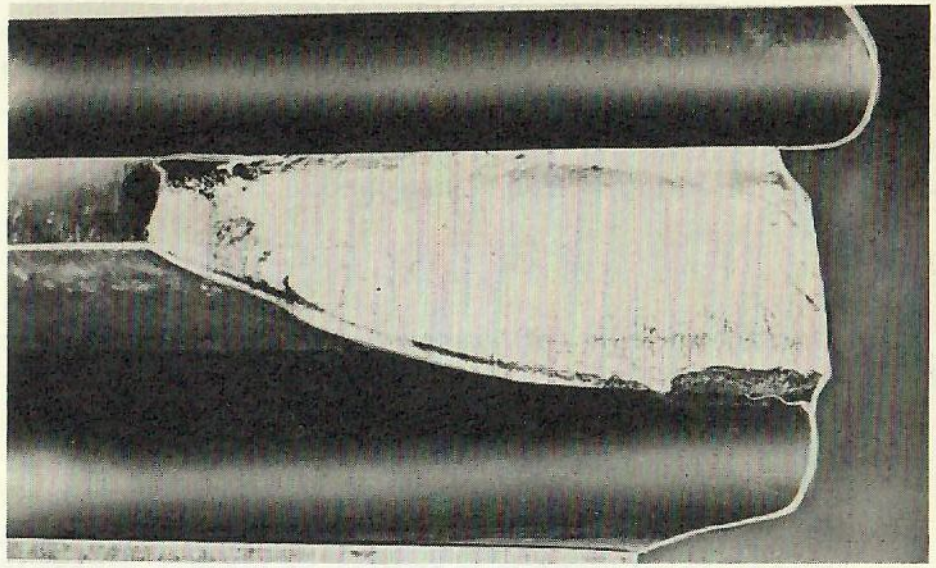

Fig. 20-8
Gear with tooth broken off at end.

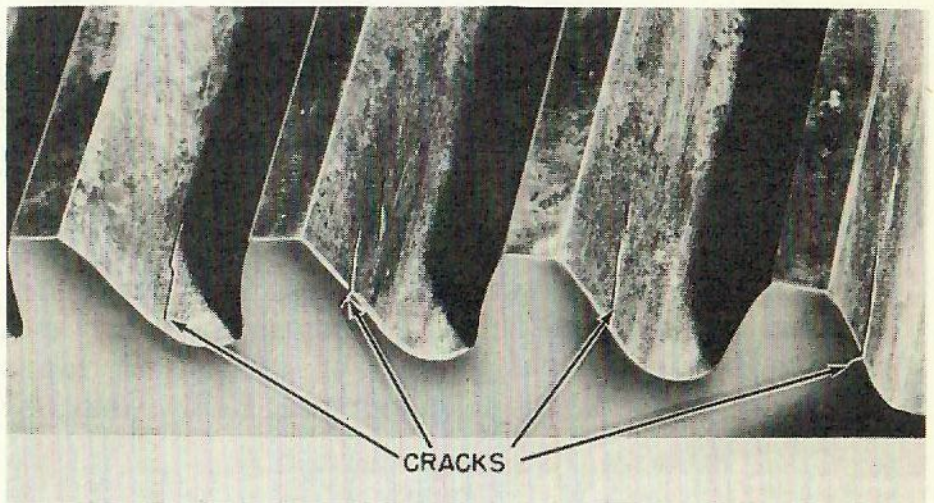

Fig. 21-8
Gear with fatigue cracks at end of teeth.

generated during this operation may cause damage to the armature bearings.

FATIGUE BREAKAGE

Pinions or gears with broken teeth should be scrapped. See Fig. 20-8. Fatigue cracks discovered

by visual, magnaflux, or other similar means, as illustrated in Fig. 21-8 are indications of incipient failure. When cracks, such as illustrated, have progressed to the end and around the corner of the tooth, the gear or pinion should be scrapped.

TIPS

Observance to the following rules will prolong the life of the gearing.

1. Keep gear cases filled to proper level with correct grade of clean lubricant. Containers used to measure and apply lubricant should be kept clean. Bulk storage facilities of lubricant should provide suitable conditions of cleanliness and temperature. Gear-case seals should be maintained in serviceable condition.

2. In the case of asphaltic lubricants, never heat above 100 C (212 F) in storage or for application. Overheating deteriorates the lubricant, increases its viscosity, and will probably result in its solidification in the gear case in service.

3. Do not let motor-suspension bearings wear beyond prescribed limits. Excessive wear will give severe misalignment of gear-tooth faces which may result in abnormal tooth wear or breakage.

4. Maintaining gears and pinions in mated sets is highly recommended. Do not mix used sets.

5. When applying a new pinion to an old gear, be sure that the tip of the pinion tooth does not interfere with the step (see Fig. 17-8) which may have already been worn in the gear tooth. Interferences here will cause vibration which may be severe enough to result in broken pinion teeth and vibration damage to motor parts.

6. Do not overheat pinions during application. Heating in excess of 190 C (375 F) may soften the material and result in an excessive rate of wear.

INSPECTION AFTER REPAIRS

After apparatus has been reconditioned or repaired, carefully check to see that no foreign matter remains in the machine and that no loose brushes or other obstructions remain on commutator. Check connections with connection diagram to make certain that apparatus is connected properly. See that all bolts are drawn up tight and locked, if necessary.

TESTING AFTER REPAIRS

After rotating apparatus has been repaired or reconditioned, measure insulation resistance with a megohmmeter. If insulation resistance measures not less than one megohm at room temperature, apply the specified high-potential test to the machine.

CAUTION: The armature must be clean and dry before high-potential test is applied. These tests should only be employed after overhauling and varnish treatment.

NOTES

TRACTION GENERATORS

Models 5GT552A3 5GT552A4 5GT553C2 5GT553C3

Model Number	5GT552A3 5GT552A4	5GT553C2 5GT553C3
Rotation (Facing Comm. End)	CCW	CCW
Classification	8-pole, comm. pole, shunt-wound, d-c generator	8-pole, comm. pole, shunt-wound, d-c generator
Nominal Rating	660 hp at 740 rpm	1000 hp at 740 rpm
Resistances at 25 C (Average)		
Shunt Field	0.707 ohm	0.714 ohm
Commutating Field	0.00412 ohm	0.00336 ohm
Starting Field	0.00370 ohm	0.00364 ohm
Armature	0.0075 ohm	0.0053 ohm
Brush-Holder Clearance to Commutator	3/32 to 1/8 in.	3/32 to 1/8 in.
Brushes		
Type	One 10-deg trailing other 30-deg stub	One 10-deg trailing other 30-deg stub
Pressure	42 to 48 oz	32 to 42 oz
Size	1/2 by 1 1/2 by 2 1/4-in. long	3/8 by 1 1/2 by 2 1/4-in. long
Minimum Length - 10 deg	1 3/16 in.	1 1/8 in.
30 deg	1 5/16 in.	1 1/4 in.
Nominal Air Gap		
Exciting Field	0.170 in.	0.170 in.
Commutating Field	0.330 in.	0.360 in.
Commutator Side Mica		
Thickness	0.045 in.	0.045 in.
Grooving Depth	3/64 in.	3/64 in.

	5GT552A3 5GT552A4	5GT553C2 5GT553C3
Commutator Diameter		
New Commutator	26 5/8 in.	26 5/8 in.
Minimum Permissible	25 5/8 in.	25 5/8 in.
Recommended Run-out Limit (after conditioning)	0.003 in.	0.003 in.
Bearing Grease Capacity		
Initial Filling	17 oz	17 oz

Weights

	5GT552A3	5GT552A4	5GT553C2	5GT553C3
Complete Generator with Fan	6942 lb	7013 lb	9225 lb	9297 lb
Armature with Fan	3010 lb	3081 lb	3800 lb	3881 lb

Models 5GT552A3 and 5GT553C2 have aluminum and steel fan;
Models 5GT552A4 and 5GT553C3 have all-steel fans.

LUBRICATION

Annually add 1/4 pint of medium heavy machine oil to spherical roller bearing. Use Texas Algol Oil, Master Lubricant's Medium Generator Oil, or equivalent.

At overhaul, disassemble bearing, clean parts to remove old grease and dirt, inspect parts for wear or defects, and on reassembly, pack bearing with 17 ounces of G-E ball-bearing grease, Type D6A2A3.

DISASSEMBLY OF GENERATOR

REMOVE ARMATURE FROM FRAME

Refer to Fig. 1-9.

1. Remove fan.

   NOTE: Place suitable marks on fan so that when reassembled, the balance weight will be in its original angular position with respect to the engine crankshaft.

2. Disconnect main-generator bus ring from commutating field.

3. Raise or remove brushes and wrap heavy paper around commutator surface to protect it in handling.

4. Remove pulley, using suitable puller.

5. Turn generator over to a vertical position, coupling end down.

6. Remove framehead bolts which secure framehead to magnet frame.

7. Place two slings around opposite arms of framehead, adjacent to the bearing. Using a crane or

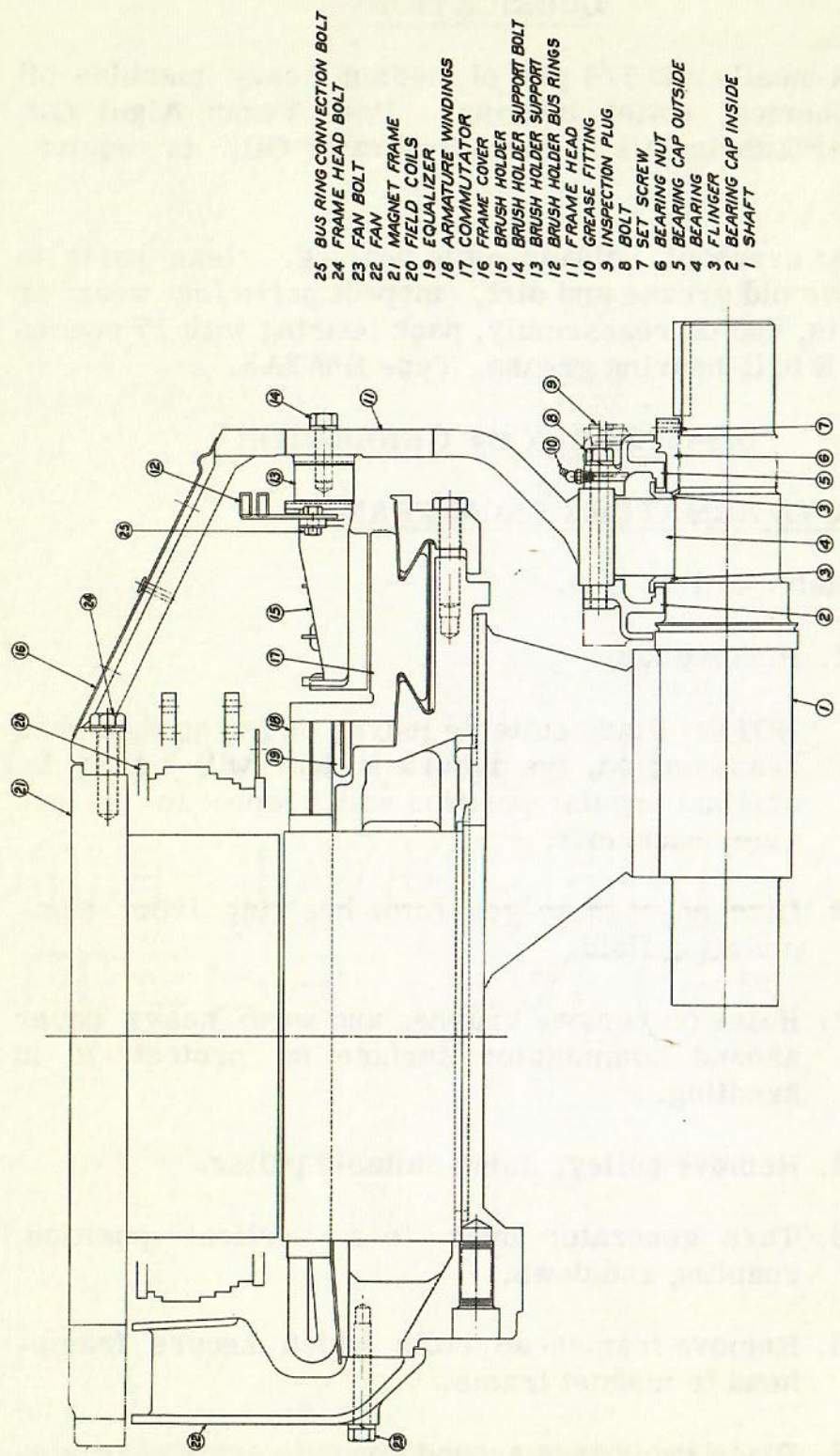

Fig. 1-9
Longitudinal section of Types GT-552 and GT-553 traction generators.

hoist, lift armature and framehead straight up out of frame assembly.

8. Place armature with a wooden cradle under core section and block up under framehead.

REMOVE BEARING FROM ARMATURE

1. Loosen set screws in bearing nut.

2. Using a spanner wrench similar to Cat. 6727127, remove bearing nut from shaft. See Fig. 2-9.

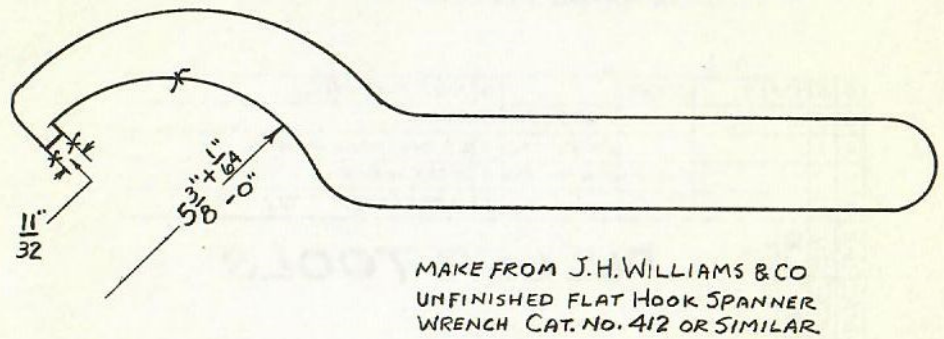

Fig. 2-9
Special spanner wrench, Cat. 6727127.

3. Take out bearing-cap bolts and remove bearing cap.

4. Slide framehead off bearing and remove it. Be careful to avoid causing damage to commutator or brush holders.

5. Install puller tool, Cat. 8837037G2 (see Fig. 3-9) and pull off bearing with inner and outer flinger.

REMOVE BRUSH HOLDER

1. Disconnect bus ring from terminal.

2. Remove brush-holder support bolt, located on outside of framehead.

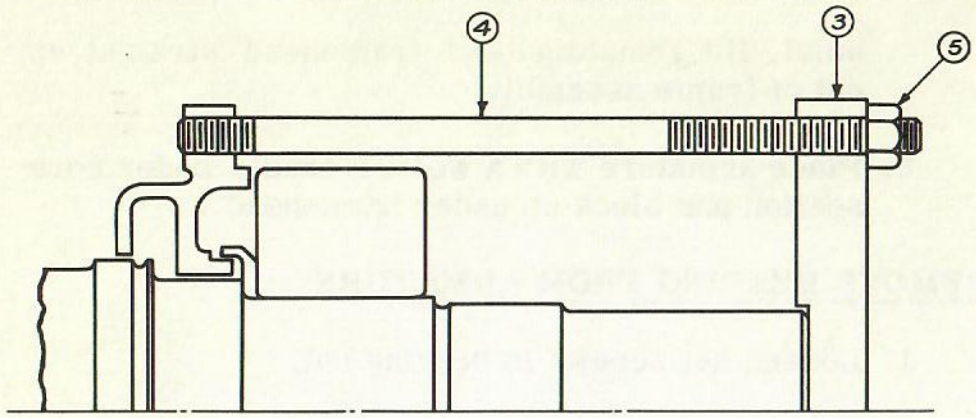

FIG. 1
CAT. 883703762
BEARING PULLER

5	5	C2L7	STEEL		5	NUT HEX. 5/8-11
5	5			V-6705043	4	STUD
1	1			V-6705042	3	CLAMPING PLATE
			FIG.1	P-6746456	2	ASSEMBLY
X					1	ASSEMBLY FIG.1
CAT. 883703762	G-2					
CAT. 883703761	G-1					
GROUP DESCR.	G. NO.					

PULLER TOOLS

Fig. 3-9
Bearing puller tool for GT-552 and GT-553 generators.

3. Lift out complete brush holder and support assembly.
4. To remove each brush holder from support, take out bolt which secures it to support.

REMOVE A FIELD COIL

Without removing armature:

1. Remove fan from armature.
2. Disconnect leads of coil and take out pole-piece bolts.
3. Slide coil and pole piece out through fan end of frame. Keep all shims with the pole piece for reassembly in original position.

RECONDITIONING OF GENERATOR

For detailed instructions on overhaul or reconditioning, or repairs to parts of generator, refer to section on GENERAL MAINTENANCE.

ADJUSTMENT OF BRUSH PRESSURE

If brush pressures are not within limits indicated in MAINTENANCE DATA, adjust pressure by changing spring ends to other notches as shown in table below. Refer to Fig. 4-9.

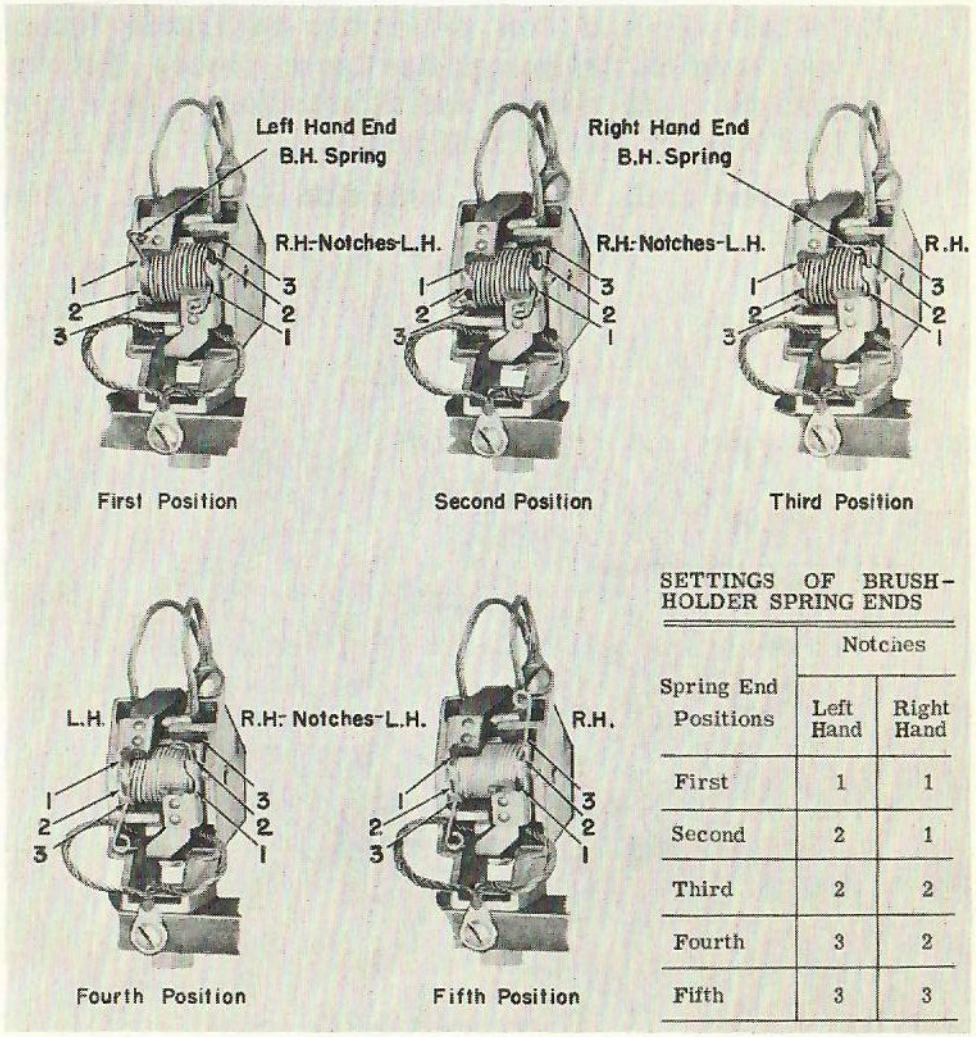

SETTINGS OF BRUSH-HOLDER SPRING ENDS

Spring End Positions	Notches	
	Left Hand	Right Hand
First	1	1
Second	2	1
Third	2	2
Fourth	3	2
Fifth	3	3

Fig. 4-9
Spring end settings for adjustable brush-holder springs.

Generator	Brush Condition	Position of Spring Ends	Notches Left	Notches Right
GT-552	New	2	2	1
	1/2 Worn	3	2	2
GT-553	New	4	3	2
	1/2 Worn	5	3	3

ASSEMBLY OF GENERATOR

ASSEMBLE FIELD COILS

1. Assemble pole piece in exciting coil; commutating coil is permanently assembled on pole.
2. Install pole and coil assembly in frame (cold) with original shims under pole piece. Secure with pole-piece bolts and tighten bolts. Use new lock washers under bolt heads.
3. Connect coils per Connection Diagram. See Figs. 5-9 and 6-9.

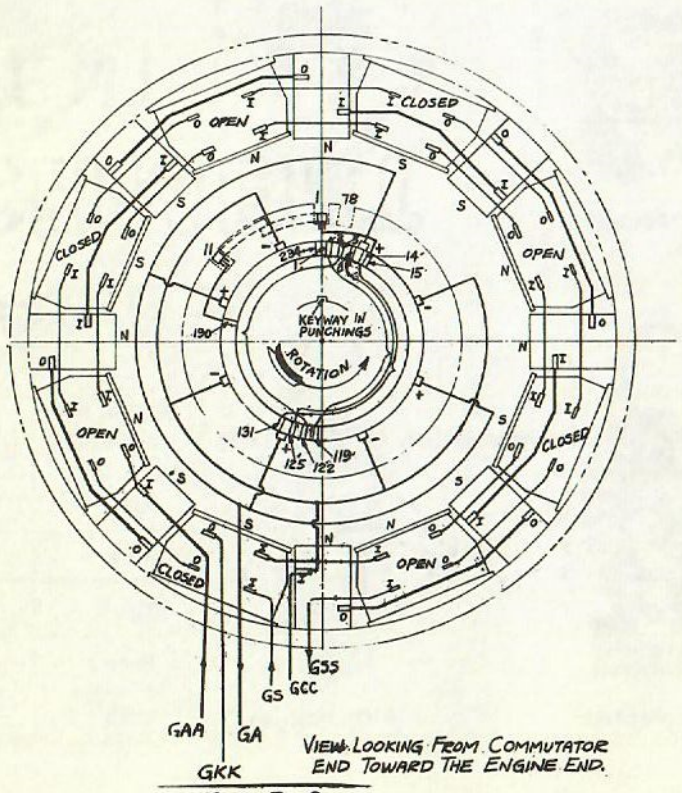

Fig. 5-9
Connection diagram for Type GT-552 generator.

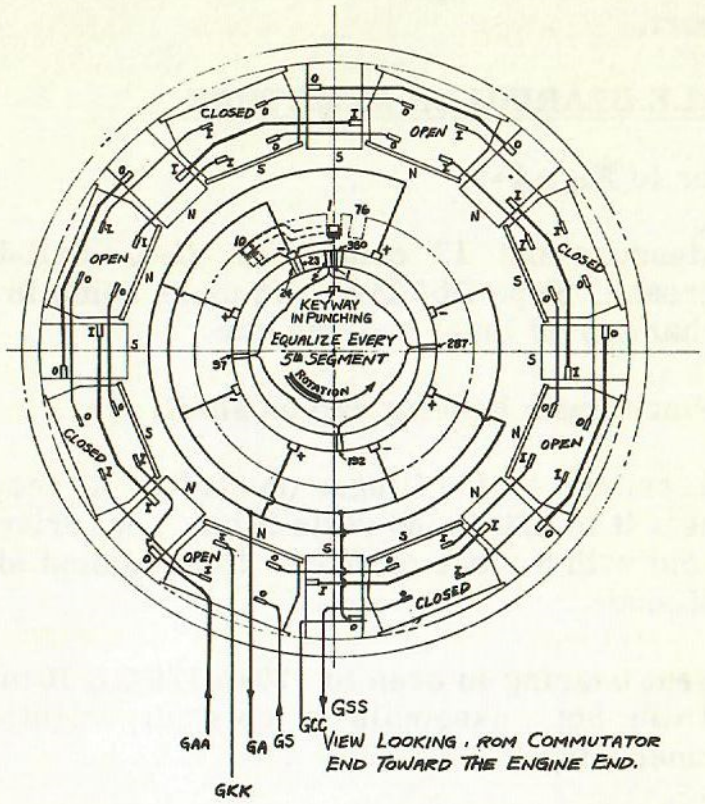

Fig. 6-9
Connection diagram for Type GT-553 generator.

ASSEMBLE BRUSH HOLDERS

1. Install brush-holder support with mycalex stud; key on stud fits in keyway on framehead to provide line-up. Secure with bolt through framehead.
2. Assemble brush holders on support, lining them up so face is parallel to commutator surface. If framehead is not on armature, move brush holders away from commutator as far as possible to avoid interference when framehead is assembled on armature. After generator is assembled, adjust brush holders on support so face is parallel with commutator and 3/32 to 1/8 inch away from it.

3. Connect bus-ring terminal to terminal on support.

ASSEMBLE BEARING ON ARMATURE

Refer to Fig. 1-9.

1. Measure out 17 ounces of G-E ball-bearing grease, Type D6A2A3, and place some in grease chamber of inner bearing cap.

2. Place inner bearing cap on shaft.

3. Assemble inside flinger on shaft. If necessary, heat it to 120 C and slide it on, or drive it on cold with a piece of pipe, tight against shoulder of shaft.

4. Heat bearing in oven to 110 to 120 C (230 to 248 F); while hot, assemble it on shaft, tight against inner flinger.

5. Stand armature on end, commutator end up. Support it on coupling flange.

6. Assemble framehead to armature, over the bearing outer race.

7. Assemble outer flinger on shaft, tight against inner bearing race.

8. Smear balance of grease (see item 1) over rollers and cage of bearing and place excess in grease chamber of outer bearing cap.

9. Assemble outer bearing cap and secure it with bolts through framehead into tapped holes in inner bearing cap.

10. Assemble bearing nut and tighten it with spanner wrench, Cat. 6727127, tight against outer flinger.

11. Lock bearing nut to shaft by tightening set screws in nut.

12. Rotate framehead on shaft to spread grease over rollers and be sure it turns freely with no binding.

ASSEMBLE ARMATURE IN FRAME

1. Place frame assembly on end, coupling end down.

2. Place two slings around opposite arms of framehead, adjacent to bearing, and using crane, lift armature and framehead assembly.

3. Lower armature into frame until framehead drops into the rabbet fit on end of magnet frame. Rotate framehead so that large field-coil connector matches the terminal on bus ring on framehead.

4. Assemble and tighten framehead bolts to pull framehead into the frame fit. Connect bus-ring terminal to commutating-field lead.

5. Turn generator to horizontal position with terminal connectors down, next to floor.

6. Assemble fan on coupling flange and, after tightening bolts, wire bolt heads together in pairs. See outline, Fig. 10-9 or Fig. 11-9.

7. Install key in shaft extension for pulley. Heat pulley to 140 C and shrink it in place on shaft.

8. Remove heavy paper from around commutator. Adjust brush holders to provide 3/32 to 1/8-inch clearance to commutator surface.

9. Install a good set of brushes. Sand new brushes to fit contour of commutator.

10. Measure insulation resistance of windings with a megohmmeter. If insulation resistance at room temperature measures one megohm or more, apply high-potential test to ground as follows:

Exciting field - GS - GSS - 550 volts

Armature, commutating field and starting field - GA, GAA and GKK - 1200 volts.

LINING UP GENERATOR WITH ENGINE

For proper operation of the engine-generator set, the generator shaft must be in line with engine shaft, and air gaps must be equally divided. On some generators, the armature may be jacked into line by means of four jacking bolts screwed into holes in the bottom of the generator frame. Refer to Fig. 7-9 and Fig. 8-9 for proper method of jacking both armatures.

Air gap must be uniform within plus or minus 10 per cent from average, as measured under each main pole as well as under each commutating pole, both in front and back. To make this check, measure "revolving" air gap, i.e. select a point on the armature-core surface (laminations), then revolve the armature and measure successively the gap between this point and the poles. Always measure air gap under the center of the pole. Eccentricity at coupling end should be held to a minimum, since this directly affects balance and brush and bearing wear.

After armature is coupled to the engine, be very careful to locate the frame so that the bearing is centrally aligned in the end play direction to avoid excessive thrust load in either direction. A determination of the position can be made by shifting the frame to its two extreme end positions and then setting it finally midway between these two extremes.

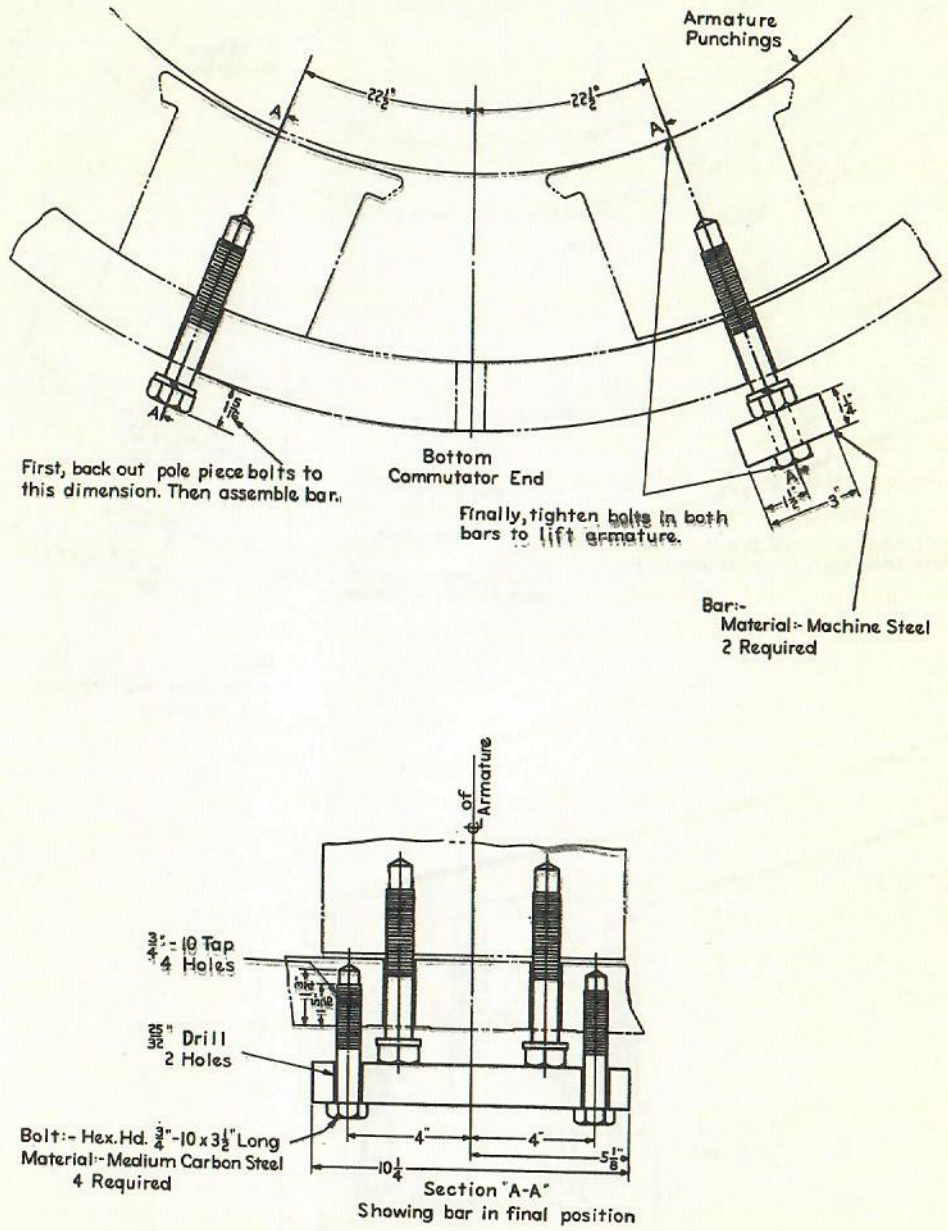

Fig. 7-9
Armature jacking arrangement, generator GT-552.

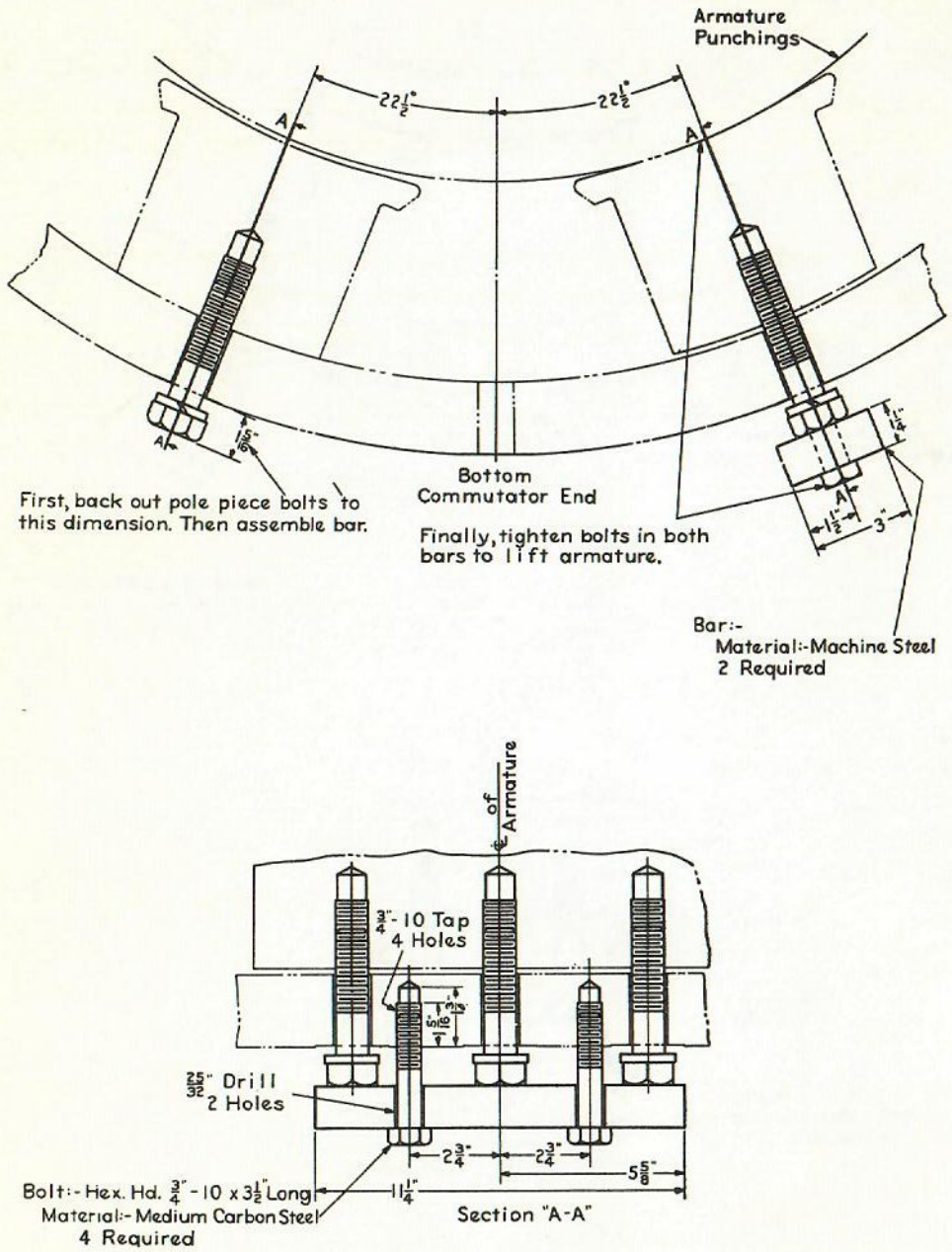

Fig. 8-9
Armature jacking arrangement, generator GT-553

RESURFACING COMMUTATOR IN LOCOMOTIVE

Use a rigidly-mounted stoning fixture to true up a commutator or to remove copper to take out disfigurements in surface.

Installation of such a grinder, Cat. 6746456G1, is shown in Fig. 9-9, consisting of a grinder, Cat. 8828491P1, adapter, Cat. 6733135P4, and two finish-grade stones.

Remove brushes from commutator to prevent their rapid wearing away during stoning operation and also to avoid excessive carbon dust. Goggles, gloves, and when conditions warrant, a respirator should be worn to protect the operator from flying particles, flashover and dust.

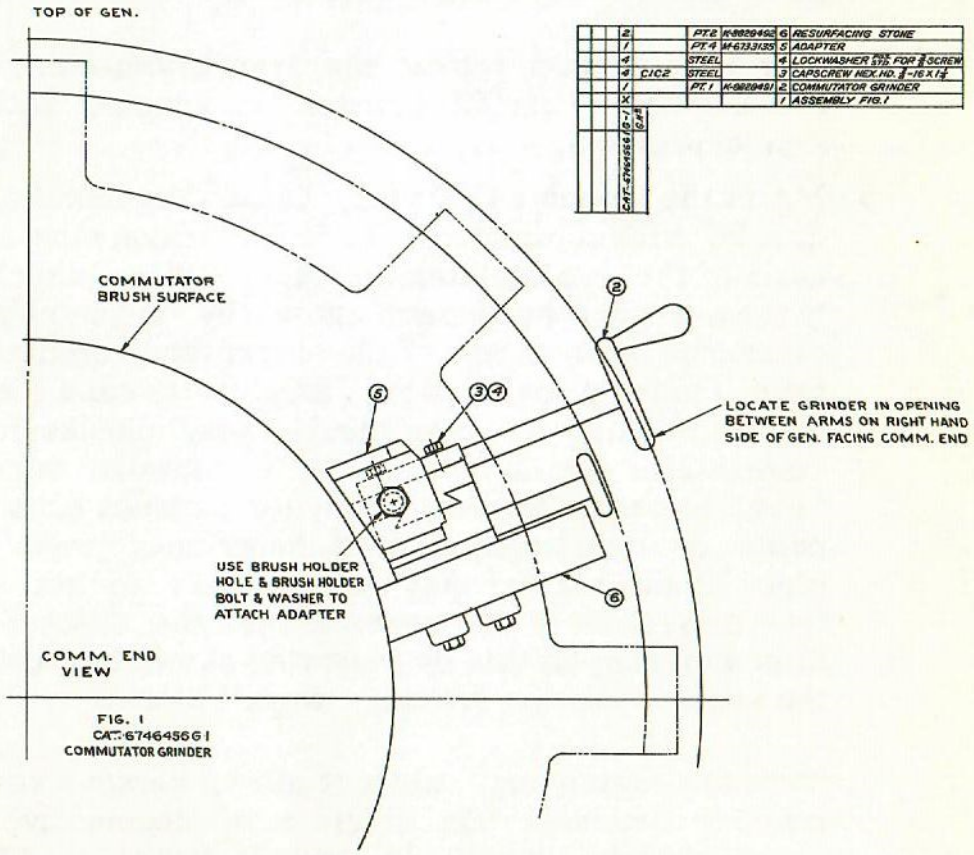

Fig. 9-9
Installation of commutator grinder in generator.

Resurface commutator in locomotive as follows:

1. Run the diesel engine until it warms up and will idle smoothly and start easily. Preferably, the commutator should be heated to operating temperature. Both these requirements will be fulfilled by running the locomotive in actual service immediately prior to stoning.

2. Shut down the engine and remove half of the brushes, leaving enough positive and negative brushes to start the engine. (Remove the hard-to-reach bottom brushes and those next to commutator risers).

3. Disconnect and remove brush holder and support assembly located between arms on right side of generator (facing commutator end).

4. Mount the adapter, using the free brush-holder bolt and hole. Mount grinder on adapter with four capscrews.

5. Mount the stones on grinder. Check alignment of grinder with commutator bars by traversing it across the commutator surface. Also check movement across commutator by measuring clearance between one of the stones and commutator, using a feeler gage, as close to each end of commutator as possible. These checks to commutator should be made on an unworn surface, either at extreme ends, or between brush paths. A slight adjustment of the grinder "ways" block on the adapter may be necessary to get a true movement of the stones across the commutator surface; do this by inserting shims between the adapter and the grinder "ways" block.

6. Start the engine and, while it idles, remove remaining brushes. On single-unit locomotive, place reverse handle in neutral position; on multiple-unit locomotive, open motor-control switch.

7. If engine idles smoothly and there is little vibration, start the stoning operation. However, if engine hunts and there is considerable vibration, raise the speed to the second or third notch where engine will run smoothly. Depending on condition of commutator, begin with either medium-grade (Cat. 8828492P9) or finish-grade stones (Cat. 8828492P2); if there is deep threading and grooving, use medium grade, otherwise start with finish-grade stones.

8. Apply the stones to commutator, working back and forth longitudinally. Check to be sure stones are cutting approximately the same amount at front and riser end of commutator where brush paths have not worn. Readjust grinder, if necessary.

   Begin with a light pressure and increase it if observed results warrant so doing. Do not take too deep a cut which will result in an excessive amount of copper being dragged over the edges of commutator bars. If possible, use some means of collecting the copper and abrasive dust thrown up by grinding operation, such as a vacuum cleaning device with the cleaning orifice set just above the stones.

9. It is usually possible to determine when commutator has been completely cleaned up without shutting down the engine. If medium-grade stones have been used, stop the engine, change to finish-grade stones, replace half of the brushes and repeat items 6, 7 and 8 above. A very light finish cut will leave the least amount of copper fins dragged from the bars and reduce time required to clean out slots after grinding.

10. Shut down engine. Examine commutator for spots that are not cleaned off. If commutator is not cleaned off, replace half of the brushes and repeat items 6, 7 and 8 until a clean surface is obtained.

11. If necessary, undercut the mica between commutator segments. See UNDERCUTTING THE MICA.

12. With engine shut down, brush out dirt and copper whiskers attached to trailing edge of bars. Use a stiff-bristle brush, preferably one with nylon bristles; a new paint brush or stencil brush with bristles cut short for added stiffness will be satisfactory.

    If stoning has produced considerable dragging of copper from edges of bars, use an engraving tool to remove the copper fins and ragged edges. Another method is to rake the slots with a piece of fiberboard, .045-inch thick.

13. Thoroughly blow out the machine with clean, dry compressed air to remove copper and dust; pay particular attention to commutator and brush rigging.

14. Install half set of brushes and start engine. If slots have been raked with fiberboard or scraped with an engraving tool, sand the commutator with a very fine sandpaper to remove small pieces of copper that may be sticking up from edges of segments.

15. Install a good set of brushes and sand them in to fit commutator. Do not use brushes which are worn or chipped. If new brushes are installed seat them in with a brush-seater stone.

16. Blow out the machine with dry compressed air.

17. Check commutator concentricity. See under COMMUTATORS in section on GENERAL MAINTENANCE.

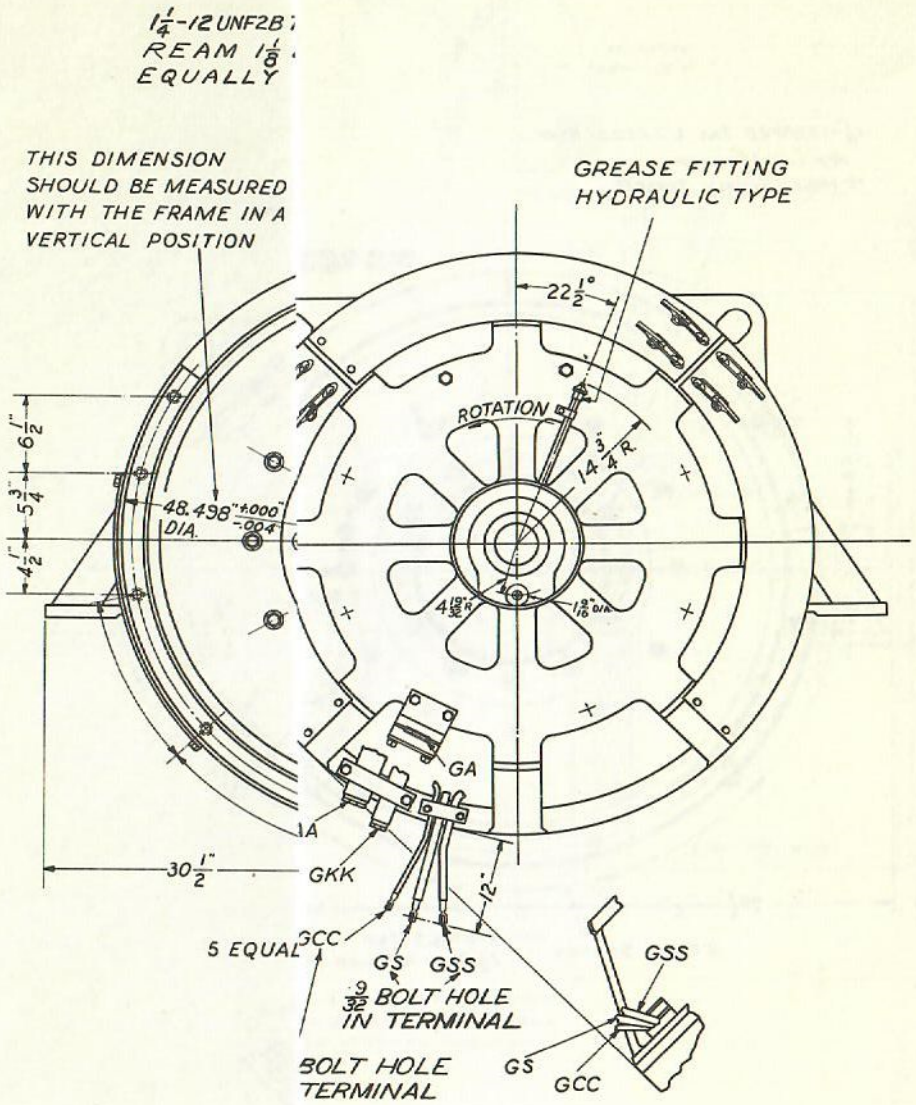

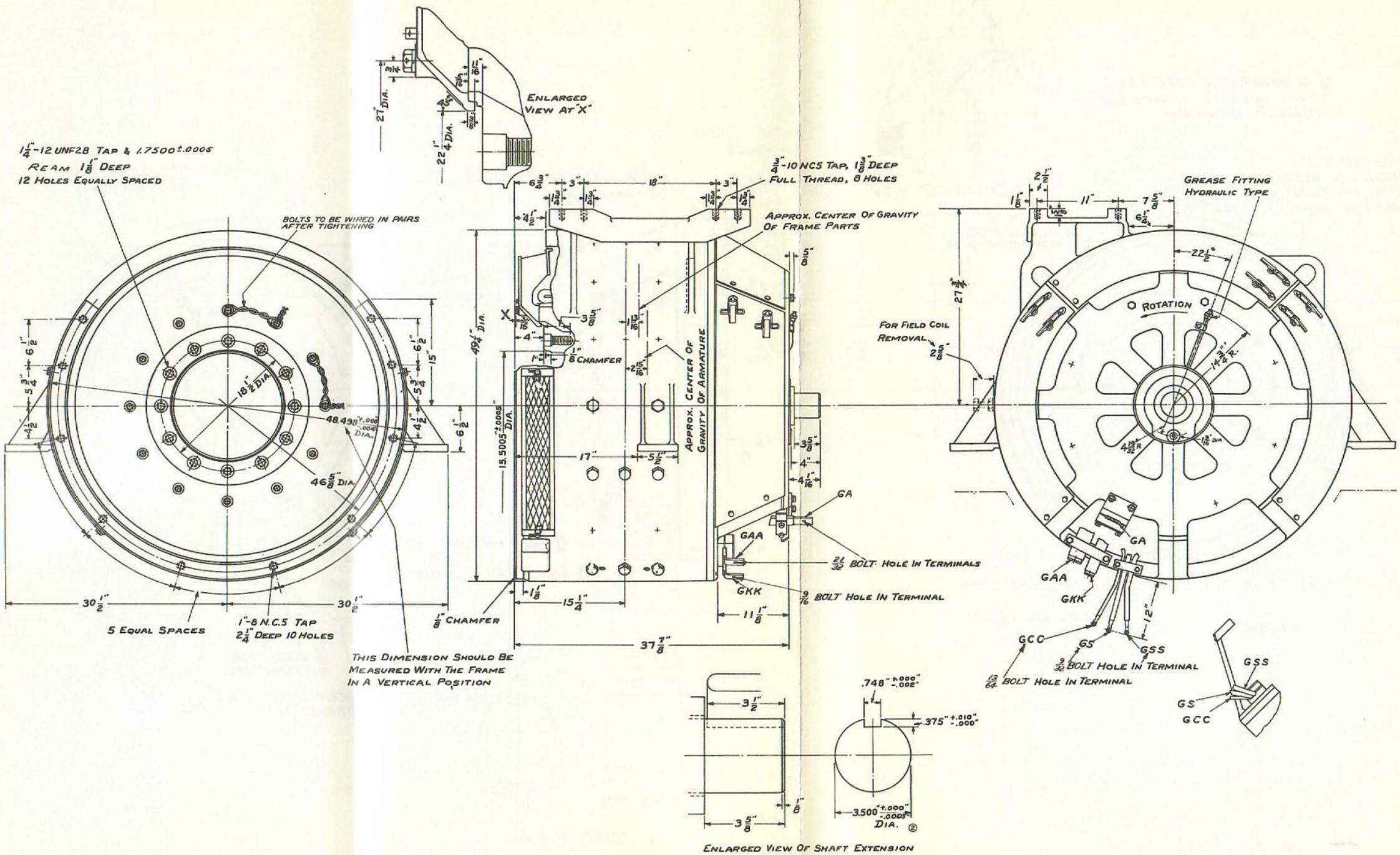

Fig. 11-9
Outline dimensions of Type GT-553 generator.

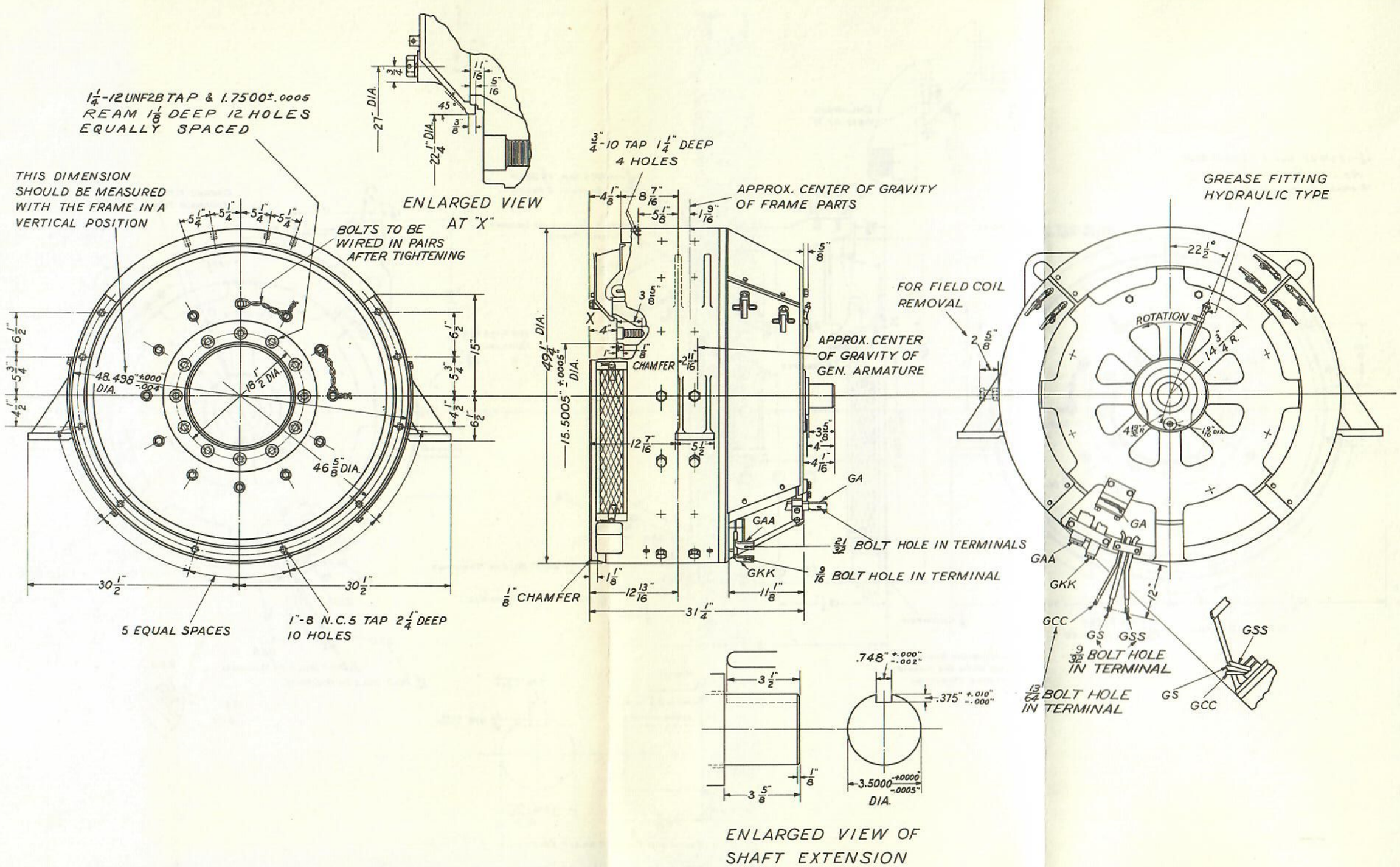

Fig. 10-9
Outline dimensions of Type GT-552 generator.

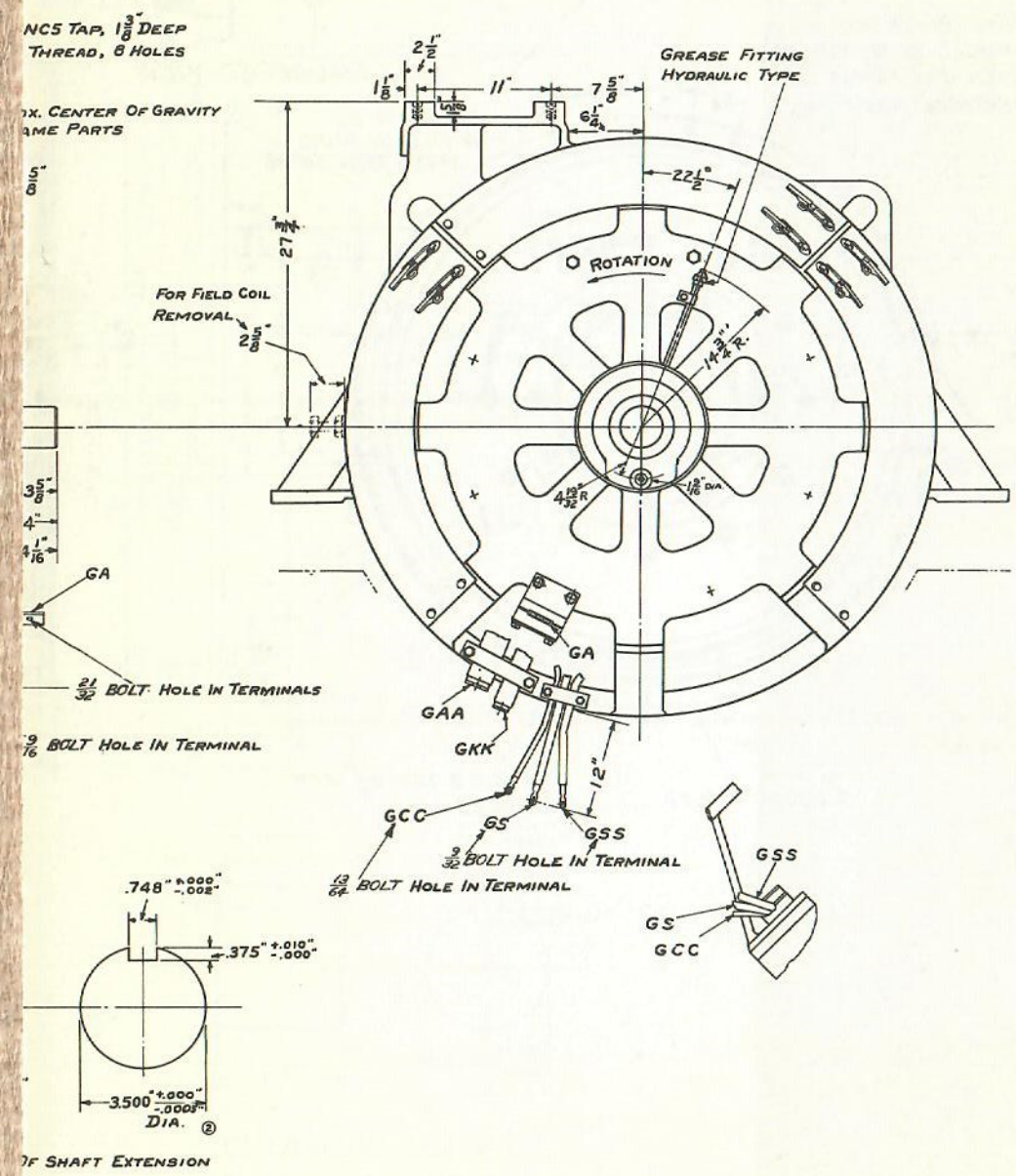

53 generator.

TRACTION MOTOR
Models 5GE731D3 and 5GE731D5

MAINTENANCE DATA

Classification . . . 4-pole, commutating-pole, series-wound, direct-current motor

Maximum Permissible Speed . . . . . 2360 rpm

Resistance at 25 C
- Armature . . . . . 0.00860 ohm
- Exciting Field . . . . . 0.00442 ohm
- Commutating Field . . . . . 0.00339 ohm

Brush Data
- Pressure . . . . . 10 to 12 lb
- Size . . . . . 1 in. by 1 5/8 in. by 2 1/2-in. long
- Minimum Length . . . . . 1 1/4 in.

Brush-Holder Clearance
- to Commutator . . . . . 1/16 to 3/32 in.

Nominal Air Gap
- Exciting Poles . . . . . 0.135 in.
- Commutating Poles . . . . . 0.150 in.

End Play
- Armature . . . . . 0.005 to 0.015 in.
- Axle - New Linings . . . . . 1/16 in.
- Wear Limit . . . 5/16 in. (1/8-in. maximum wear per lining flange)

Clearance on Diameter
- Axle Bearings - New Linings . . . . . 1/32 in.
- Wear Limit . . . . . 1/16 in.

Radial Clearance - Armature Bearings (Assembled)
- Commutator End . . . . . 0.0015 to 0.0054 in.
- Pinion End . . . . . 0.0024 to 0.0069 in.

Commutator Side Mica

Thickness	0.045 in.
Grooving Depth	3/64 in.

Commutator Diameter

New Commutator	13 1/2 in.
Minimum Permissible	12 1/2 in.

Bearing Grease Capacity (Initial Filling)

Commutator-End Bearing	10 oz
Pinion-End Bearing	22 oz

Axle Bearings

Depth of Oil (Measured on Slant) - Max.	3 1/2 in.
Min.	1 3/4 in.
Oil Capacity	6 pints
Wool Waste (per Axle Cap)	2 lb 8 oz
(per Motor)	5 lb

Impedance of Field Circuits

	Amps	Volts Max.	Volts Min.
Measured with 60 cycles, a-c, brushes lifted, armature assembled.			
Exciting Field	18	7.6	6.2
Comm. Field	24	7.6	6.2
Measured with 60 cycles, a-c, field coils only, hot, before assembly of armature.			
Exciting Field	18	6.7	5.5
Comm. Field	24	5.8	4.7

Weights

Bare Motor with Pinion	5600 lb
Armature with Collars	1540 lb

LUBRICATION

Armature bearings are lubricated with G-E ball-bearing grease, Type D6A2C4, when motor is assembled. Grease pipes, formerly used in bearing caps, have been eliminated or replaced by a pipe plug screwed into the tapped hole. These plugs are either welded to cap (using bronze welding rod) or sealed with a metal cover, welded to cap and marked, "DO NOT LUBRICATE". This is to prevent the addition of grease between overhauls. Do not mix D6A2C4 grease with any other grease or a lubrication failure may result.

DO NOT ADD GREASE to bearings until motor is disassembled for overhaul.

At overhaul, remove bearings from shaft, thoroughly clean bearing and housings to remove old grease and dirt, inspect parts for wear or defects, and, on reassembly, repack each bearing with G-E ball-bearing grease, Type D6A2C4.

Motors manufactured before June, 1950, were lubricated with G-E ball-bearing grease, Type D6A2A3, and lubrication and maintenance instructions were based on this condition and required the periodic addition of grease during operation. At overhaul, convert bearings to sealed lubrication and repack with D6A2C4 grease; refer to REPACKING BEARINGS under General Maintenance.

Axle bearings are oil lubricated with electric car oil. Model 5GE731D5 is equipped with wick lubricators in axle caps; Model 5GE731D3 and all other models manufactured before October, 1950, were equipped with wool-waste packed axle caps. Waste-packed caps can be changed to felt-wick lubrication by use of conversion kit, Cat. No. 6746988G1.

Lubricate gearing with good gear compound; use Texaco Crater Compound or equivalent (No. 5 for summer; No. 2 for winter operation).

OVERHAUL

Refer to MAINTENANCE OF ROTATING APPARATUS for detailed procedure in overhauling motor.

REMOVAL AND MOUNTING OF PINIONS

Remove pinion with a suitable pinion puller, such as Rodgers hydraulic puller, Cat. 108X87 (see Fig. 1-10), plus the proper clamping adapter for pinion. Do not heat pinion before pulling and do not use wedges between pinion and bearing cap.

Proper pinion mounting is essential; proceed as follows:

1. Thoroughly clean pinion fit of shaft and bore of pinion with a suitable cleaning solvent. DO NOT USE KEROSENE. Remove scoring on either pinion or shaft. Spot cold pinion on shaft by hand to obtain at least 75 per cent fit.

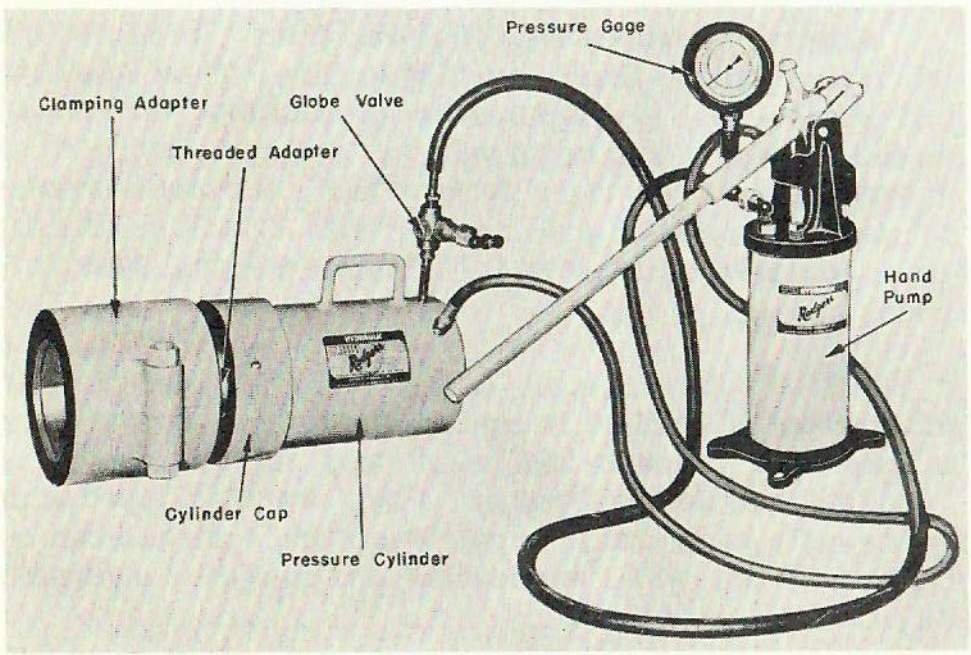

Fig. 1-10
Hydraulic pinion puller with threaded master and clamping adapter.

2. Trial mount cold pinion on shaft by hand. Measure and record position of pinion with respect to shaft, making measurements with a micrometer indicator gage. Use method similar to one shown in Fig. 2-10. Mark points of measurement and mark across end of shaft and pinion face so that pinion (when heated) can be mounted in exactly the same angular position, and advance measurement can be made from the same point.

   NOTE: ZERO SETTING OF PINION-ADVANCE GAGE MUST NOT BE DISTURBED UNTIL ALL READINGS ON PINION ARE COMPLETED.

3. Mount pinion hot on shaft so as to secure an advance along axis of shaft from cold to hot position as given in table below. This table also gives estimated degrees (difference) which will provide

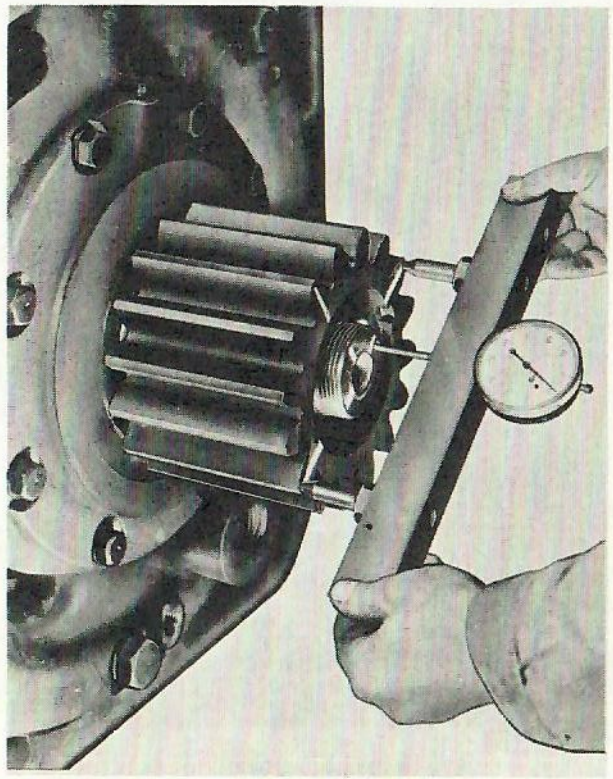

Fig. 2-10
Method of using advance gage, Cat. 6734861G1.

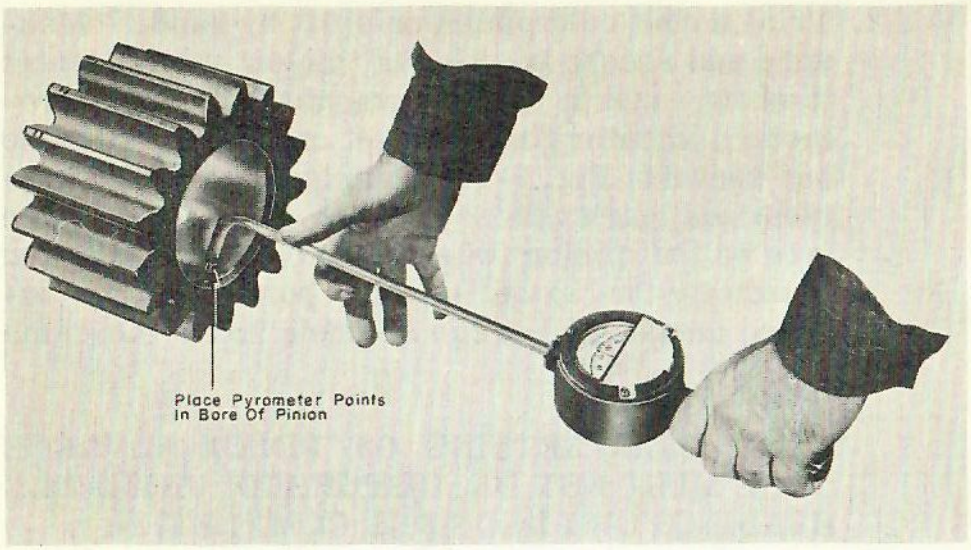

Fig. 3-10
Method of measuring temperature of a pinion with a pyrometer.

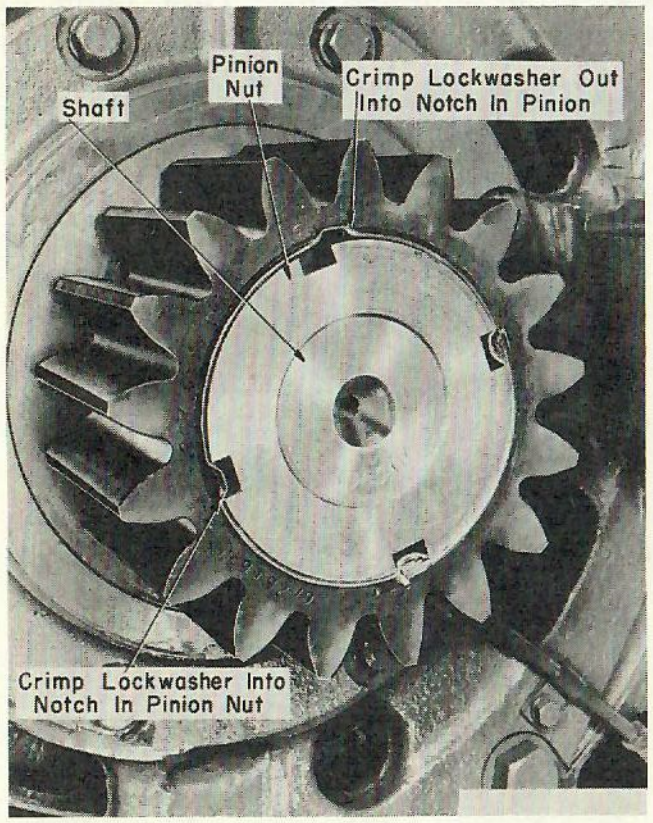

Fig. 4-10
Assembly of pinion, showing method of locking the nut with lock washer.

this advance. Temperature difference between shaft and pinion is only estimated and should be adjusted slightly higher or lower to keep pinion advance within tabulated limits.

Cat. No.	No. of Teeth	Advance	Est. Temp. Rise Above Shaft	Pinion Puller Adapter Cat. No.
4767970	16	.052-.062	128 C (230 F)	107X47
4767980	18	.054-.064	130 C (234 F)	107X85

NOTE: TEMPERATURE OF PINION MUST NOT EXCEED 190 C (375 F).

Heat pinion in an oven until entire pinion has reached a uniform temperature, at required number of degrees above shaft temperature. Shaft and pinion temperature can best be checked with a hand pyrometer of the type shown in Fig. 3-10.

4. Mount hot pinion in same angular location with respect to end of shaft as when cold. Be sure proper advance is obtained.
5. After pinion has cooled, check pinion position at marked points with advance gage, and make sure advance is within above limits. If not within these limits, remove pinion and remount.
6. Assemble lock washer and pinion nut. Tighten nut and lock it by bending up the lock washer. See Fig. 4-10.

DISASSEMBLY OF MOTOR

REMOVE ARMATURE FROM FRAME

See Fig. 5-10.

1. Remove axle caps from frame and remove top half of gear case, if still on motor.

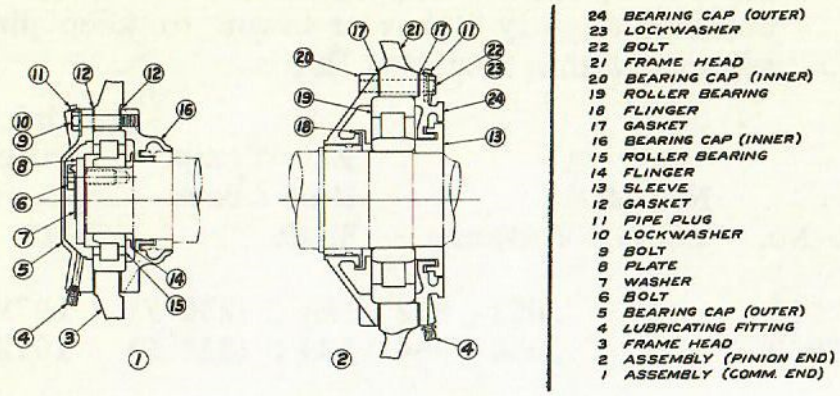

Fig. 5-10
Bearing assembly of GE-731 traction motor.

2. Clean outside of frame, using compressed air, steam jenny or cleaning solvents, to remove accumulated road dirt, oil, etc.

3. Unscrew pinion nut from end of shaft and pull pinion, using hydraulic puller. See above.

4. Remove commutator covers. Disconnect and take out all brushes and wrap heavy paper around commutator for protection during handling.

5. Remove eight bolts holding inner and outer bearing caps to framehead on commutator end. Take off outer bearing cap.

6. Turn motor on end, commutator end down, and level it so that armature can be lifted vertically out of frame without damaging the bearings, commutator or brush holders. See Fig. 6-10.

7. Remove washer and end plate from commutator end of shaft, and take off the thrust ring of bearing. Install commutator-end bearing pilot (see Fig. 7-10) over end of shaft, and secure it with two bolts screwed into tapped holes in end of shaft.

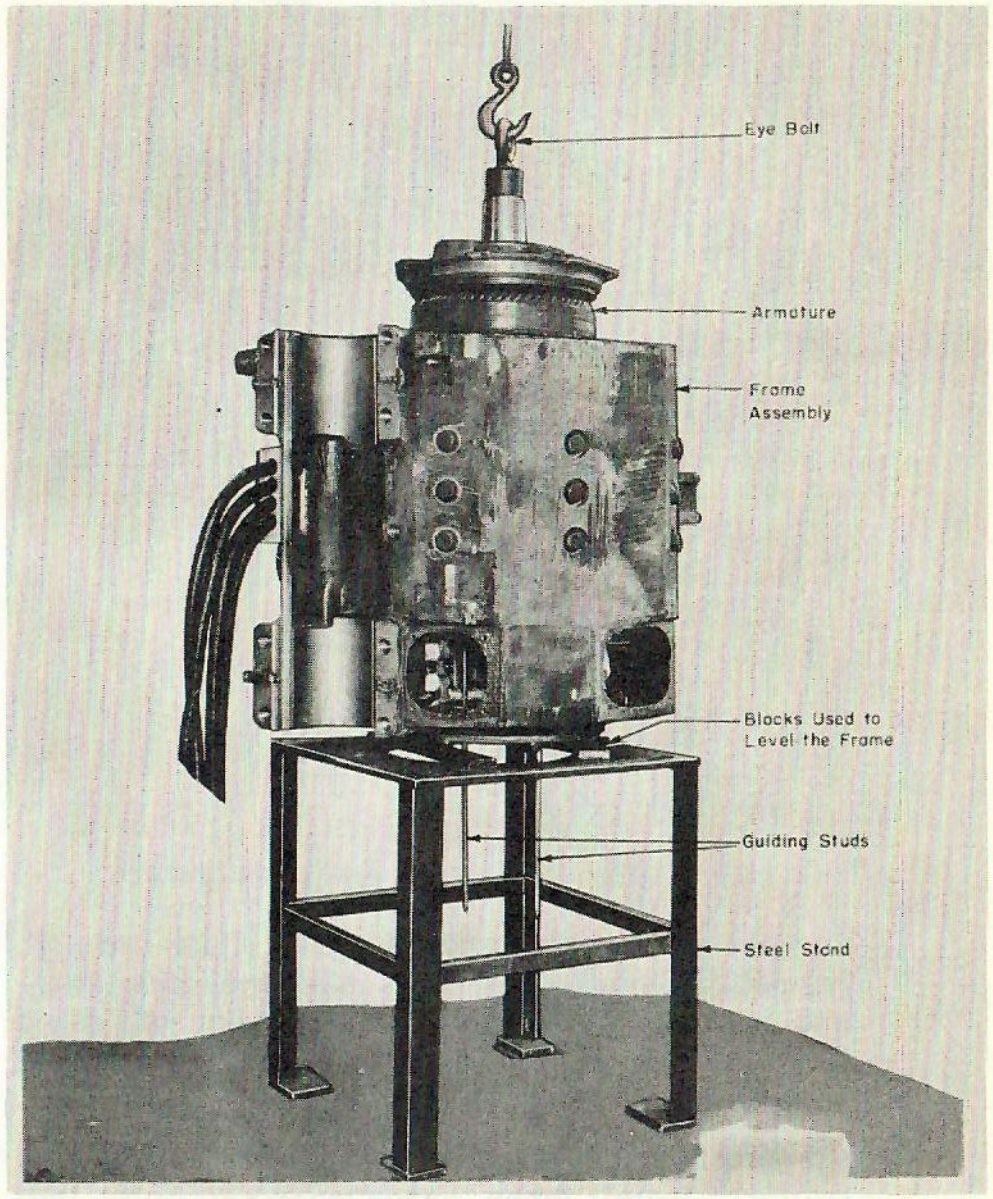

Fig. 6-10
Method of assembling and removing armature from railway motor frame.

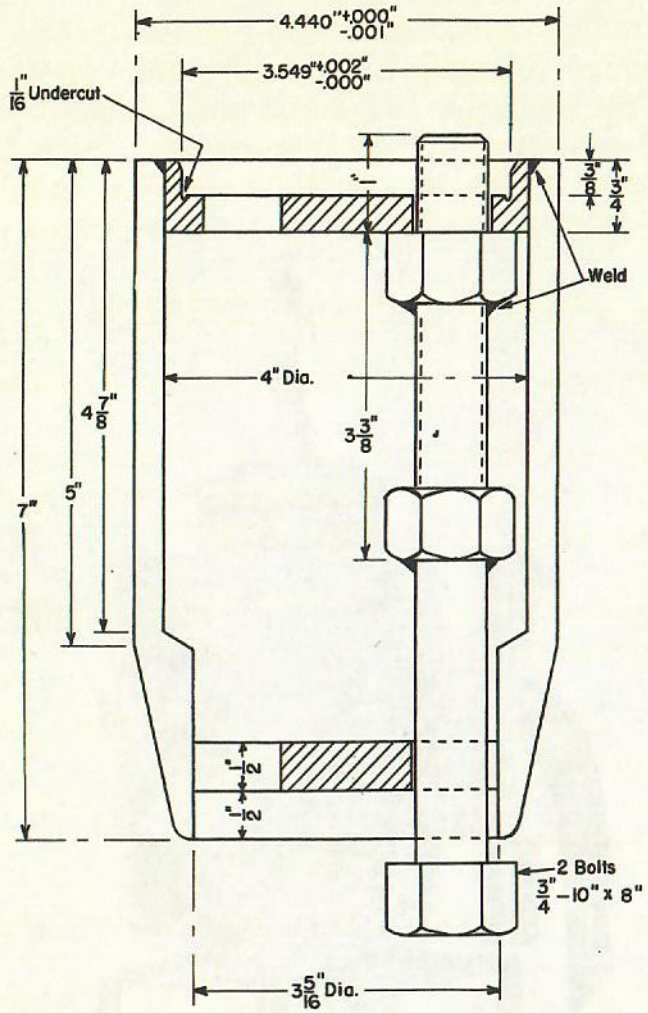

Fig. 7-10
Pilot sleeve for commutator end of armature.

Screw two or three hardened-steel studs through framehead into tapped holes in inner commutator-end bearing cap to guide armature out of frame so that commutator will not strike the brush holders.

8. Remove bolts holding pinion-end framehead to frame. Install three hardened-steel bolts into threaded jack holes in framehead, and break framehead loose from frame fit.

9. To lift armature, assemble a lifting eye bolt over threaded end of armature shaft; be sure eye bolt is heavy enough to lift armature.

10. Line up hoist cable with centerline of armature before engaging hook in eye bolt on end of shaft. With sufficient strain on hoist cable to take weight of armature off the framehead, jack framehead out of frame fit and lift complete armature assembly out of frame.

REMOVE COMMUTATOR-END BEARING

1. Remove armature from frame. See above.

2. Remove inner bearing race from shaft by applying puller, Cat. 6751526G2, between inner race and flinger. See Fig. 8-10.

3. Apply puller, Cat. 6751526G3, and pull off flinger and inner bearing cap.

4. To pull inner sleeve from shaft (when necessary), apply puller, Cat. 6751526G4.

REMOVE PINION-END BEARING

1. Remove armature from frame. See above.

2. Using puller, Cat. 6751526G5, pull labyrinth sleeve from shaft. This sleeve has four tapped holes for applying puller. See Fig. 8-10.

3. Take out bolts and remove outer bearing cap.

4. Slide framehead off the shaft, together with outer bearing race with rollers; inner race remains on shaft.

5. Pull inner bearing race off shaft by applying puller, Cat. 6751526G6, between flinger and inner race.

6. Remove inner bearing cap and flinger by applying puller, Cat. 6751526G7; screw four puller bolts into tapped holes in bearing cap. See Fig. 9-10.

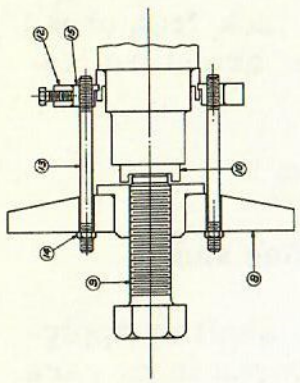

FIG. 3
CAT. 6751526G4
SLEEVE PULLER
COMM. END

CAT. 6751526G1 COVERS ALL PARTS IN SUFFICIENT QUANTITY TO MAKE UP ASSEMBLIES IN FIGURES 1 THRU 5 ON T-6751526 AND FIGURES 1 & 2 ON P-6746495 WITHOUT DUPLICATION OF PARTS

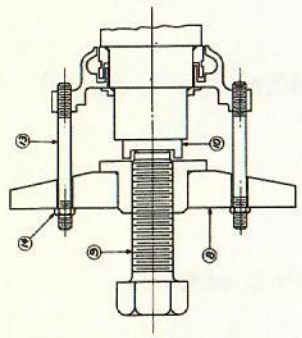

FIG. 2
CAT. 6751526G3
FLINGER PULLER
COMM. END

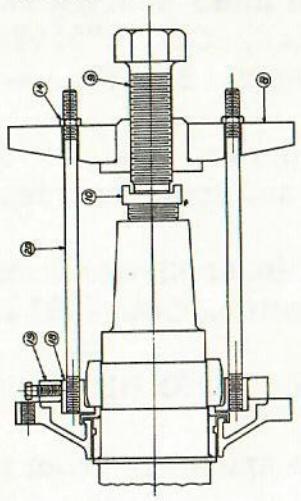

FIG. 5
CAT. 6751526G6
BEARING PULLER
PINION END

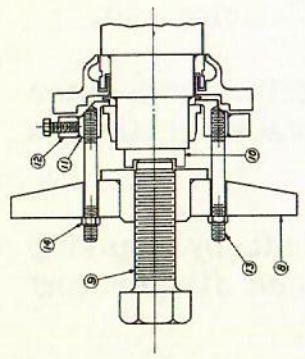

FIG. 1
CAT. 6751526G2
BEARING PULLER
COMM. END

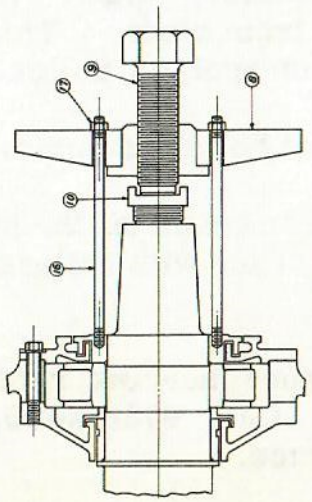

FIG. 4
CAT. 6751526G5
RETAINING RING PULLER
PINION END

Fig. 8-10
Puller tools for disassembling bearings.

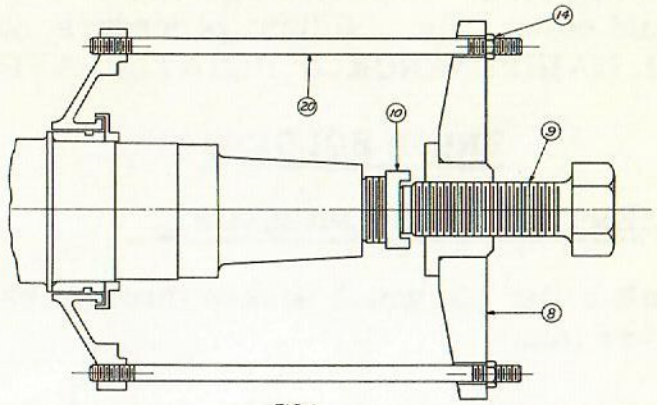

FIG. 1
CAT. 6751526G7
FLINGER PULLER
PINION END

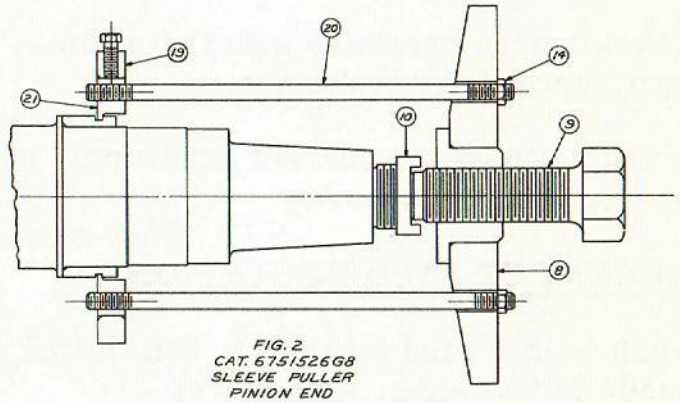

FIG. 2
CAT. 6751526G8
SLEEVE PULLER
PINION END

Fig. 9-10
Puller tools for removing bearing parts.

7. **To remove inner sleeve (when necessary), use puller, Cat. 6751526G8. See Fig. 9-10.**

8. **To remove outer bearing race out of framehead, press it out of framehead fit.**

REPAIRS

To make repairs or recondition armature, commutator, field coils, etc., follow procedure outlined in GENERAL MAINTENANCE OF ROTATING APPARATUS.

BRUSH HOLDERS

ADJUSTMENT OF BRUSH PRESSURE

1. Pull cotter pin which passes through ratchet and lever pin.

2. Rotate ratchet in direction desired (forward to increase pressure, backward to reduce pressure).

3. Insert cotter pin in proper hole in ratchet which lines up with a hole in lever pin.

4. Check spring pressure with fish scale. If correct, spread the cotter pin.

5. If unable to obtain correct pressure, install new pressure-arm assembly.

REPLACEMENT OF STUD INSULATION

If brush-holder stud insulation has failed, repairs may be made in two ways, as follows:

1. Completely assembled studs may be ordered, which are machined 0.005-inch oversize on end of stud which is pressed into brush-holder body. This insures that new stud will be a tight fit in old holes after pressing out the defective stud. To assemble new stud, support stud in clamping fixture (see Fig. 12-10) and press it into reamed hole in body casting; take precautions to maintain correct spacing and alignment. Then drill hole for rivet or pin, through casting and stud, assemble pin and rivet over both ends to prevent it from working out.

2. Replace defective insulation only, without removing steel stud from brush-holder casting. Refer to Fig. 12-10.

   a. Carefully remove old insulation from stud, being careful not to destroy alignment, as follows: Take off insulator and hold insulated end of stud under hydraulic press; a quick application of pressure will crack the textolite sleeve and permit removal of the insulation.

   b. Assemble insulating parts in metal sleeve, as follows: Insert three mica washers (total thickness - 0.015 inch) in bottom of metal sleeve. Clamp metal sleeve in fixture (see Fig. 10-10) to prevent mushrooming of end.

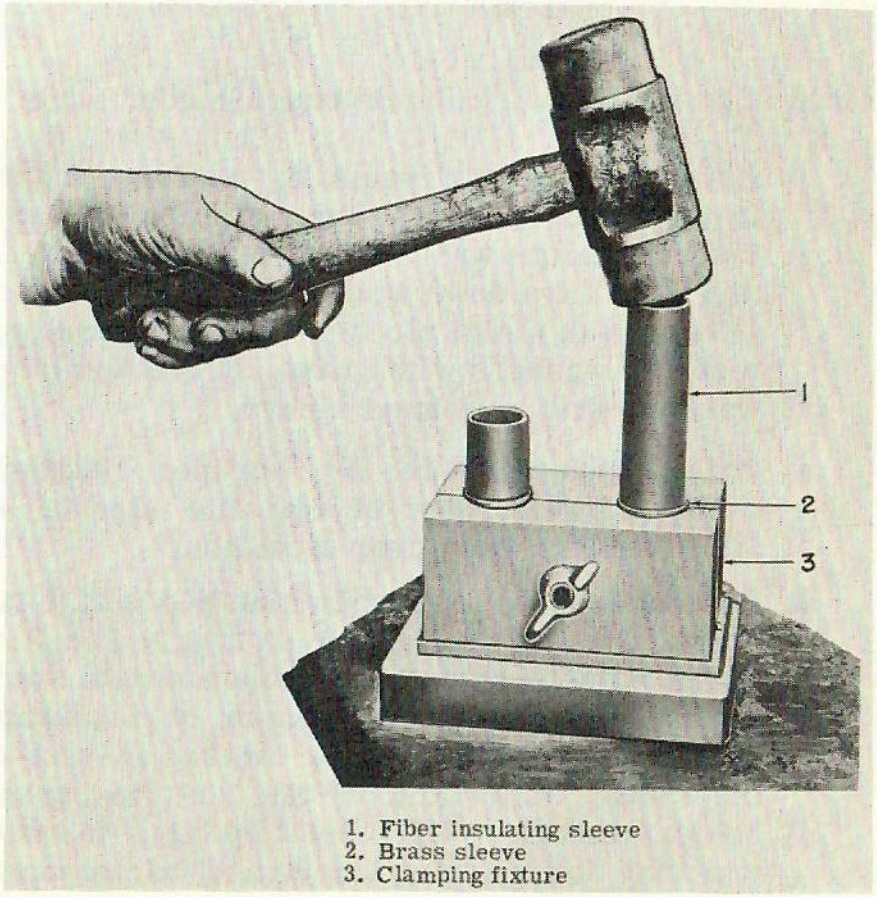

1. Fiber insulating sleeve
2. Brass sleeve
3. Clamping fixture

Fig. 10-10
Use of clamping fixture in assembly of brush-holder stud insulation.

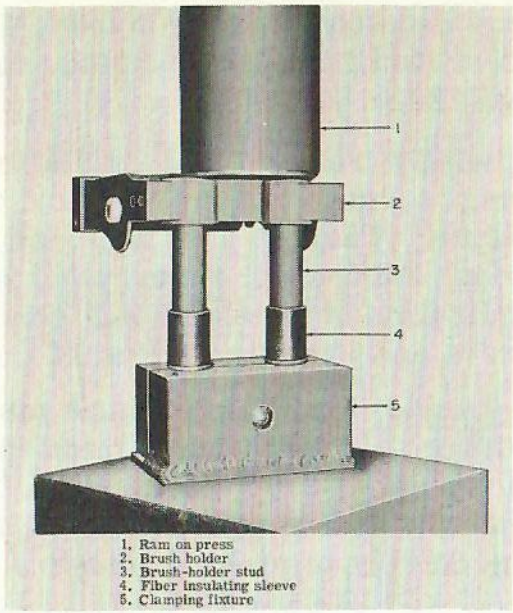

Fig. 11-10
Method of pressing insulation on brush-holder studs.

Assemble textolite insulating sleeve, driving it down until it seats against the mica washers. Insert textolite washers in insulating sleeve and push them down against the mica washers in bottom of metal sleeve. NOTE: Use four textolite washers with brass sleeve and three washers with aluminum sleeve.

c. With a sharp knife or scraper, slightly chamfer inside edge of textolite sleeve, to facilitate assembly over steel stud.

d. With assembled insulation clamped in fixture, press it on steel stud in casting. See Fig. 11-10. Press studs into insulation until studs seat against washers at bottom of insulating sleeve. Support under or press on end of steel stud, to avoid loosening stud in brush-holder casting. Care must be taken to avoid cracking of insulating sleeve and to maintain alignment of studs.

e. Apply high-potential test of 5000 volts between metal sleeve and body casting for one minute.

REPLACEMENT OF PORCELAIN INSULATOR

1. Carefully remove defective insulator so as to avoid unnecessary damage to insulation.

2. To replace insulation under insulator, measure out a length of glass tape, 0.015 inch by 1-inch wide by about 12-inches long (pretreat glass tape with raw linseed oil). Wrap glass tape around insulating sleeve so that lower edge of tape is about 1/8 inch above casting. Apply Glyptal No. 1201 red enamel to tape as it is applied to stud.

3. Push new insulator, glazed end down, over the glass tape until it rests against casting. Insulator should be a snug, sliding fit over tape. See Fig. 12-10.

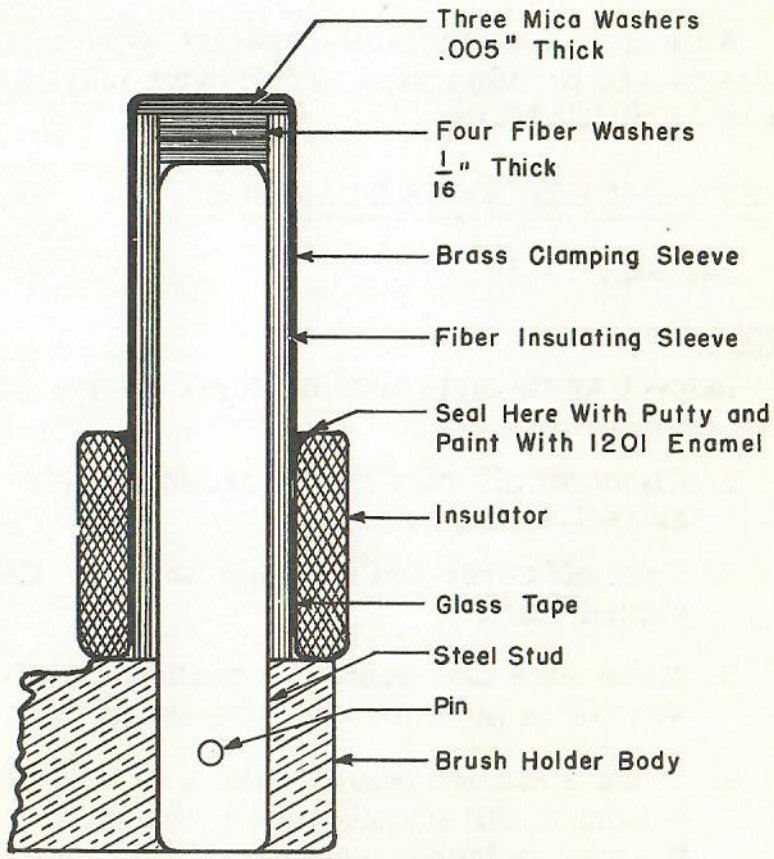

Fig. 12-10
Cross-section of fiber-insulated stud.

4. Make a sealing putty by mixing talc with Glyptal No. 1201 red enamel.
5. Seal upper opening between sleeve and insulator with this putty; press putty down into opening, flush with top of insulator.
6. After putty has set, paint over top of insulator and of putty with Glyptal No. 1201 red enamel, to seal unglazed end of insulator and the putty.

NOTE: If insulation has not been replaced (see item 2 above), and original glass tape is undamaged, brush the old tape with Glyptal No. 1201 red enamel and assemble new insulator as in items 3, 4, 5, and 6 above.

AXLE BEARINGS

Axle caps are large-oil-capacity type and may be waste packed or lubricated by felt-wick lubricators. See under LUBRICATION.

WASTE-PACKED AXLE BEARINGS

See Fig. 13-10.

Inspection

Inspect waste and check oil level at regular intervals, as follows:

1. Clean off all dirt from around waste chamber and oil-well cover.
2. Take off cover and examine waste. Change any glazed waste.
3. Make sure that waste is packed tightly against window in lining by checking the packing.
4. Using a suction pump, take a sample of oil from bottom of oil chamber and check it for water. If water is found, remove all oil from axle cap, repack it with fresh waste and refill cap with fresh oil.

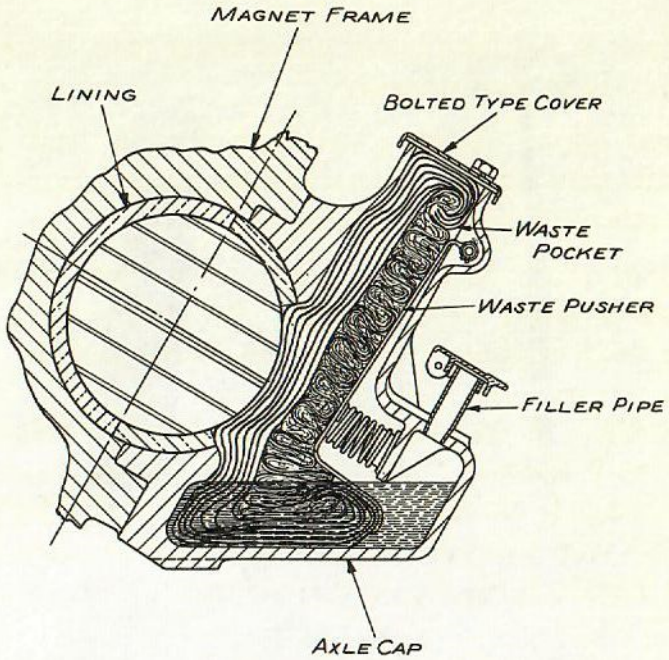

Fig. 13-10
Cross-section of large-oil-capacity axle cap packed with wool-waste.

5. Repack bearings with fresh waste after 25,000 to 30,000 miles of service, or every six months, whichever comes first. Also repack at every wheel change.

Repacking Axle Caps

Refer to Fig. 14-10 to 21-10, inclusive.

Repack waste and oil-lubricated axle bearings as follows:

1. Acquire proper tools for packing the bearing; see Fig. 14-10.
2. Obtain a good grade of continuous-strand wool waste, preferably from General Electric Company to Specification A50E14A. First soak the wool waste at 75 F in same lubricant to be used in axle cap, for at least 12 hours; then allow it to drain for about four hours before packing axle cap. Each axle cap requires about six skeins at between six and seven ounces per skein.

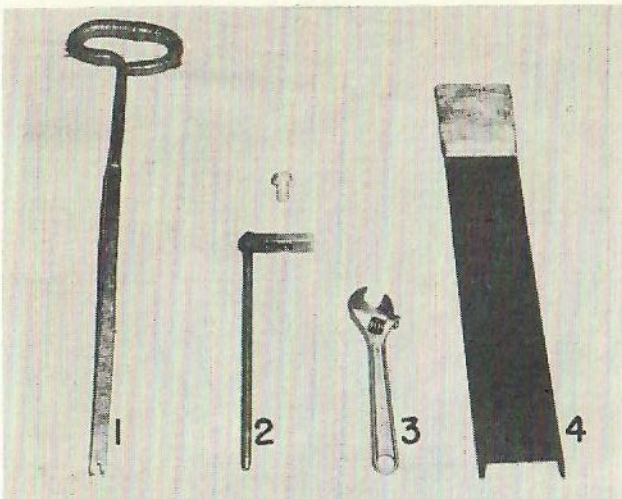

1. Standard packing iron
2. Fixture to depress pusher plate
3. Open-end wrench
4. Wide flat packing iron

Fig. 14-10
Tools required to properly pack waste-packed axle cap.

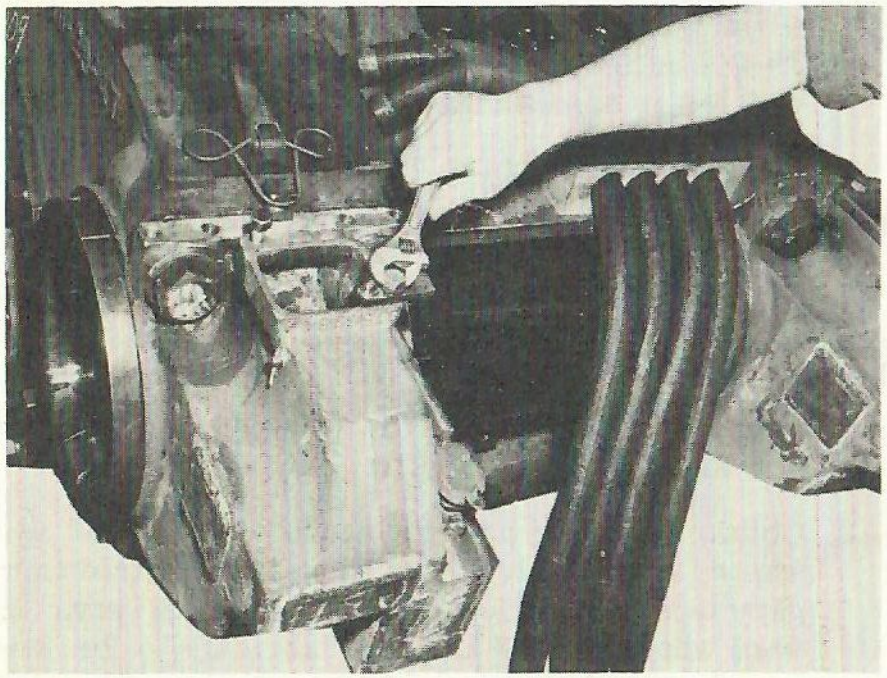

Fig. 15-10
Use inspection cover bolt to secure the fixture which depresses the waste pusher.

Fig. 16-10
Make wick of three skeins of long-fiber wool waste and comb strands out straight.

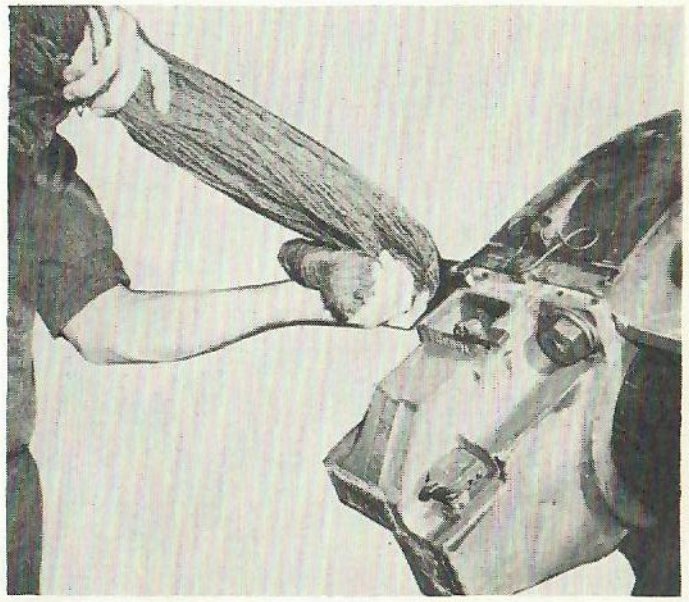

Fig. 17-10
Fold wick over end of wide packing tool and insert it to bottom of axle cap.

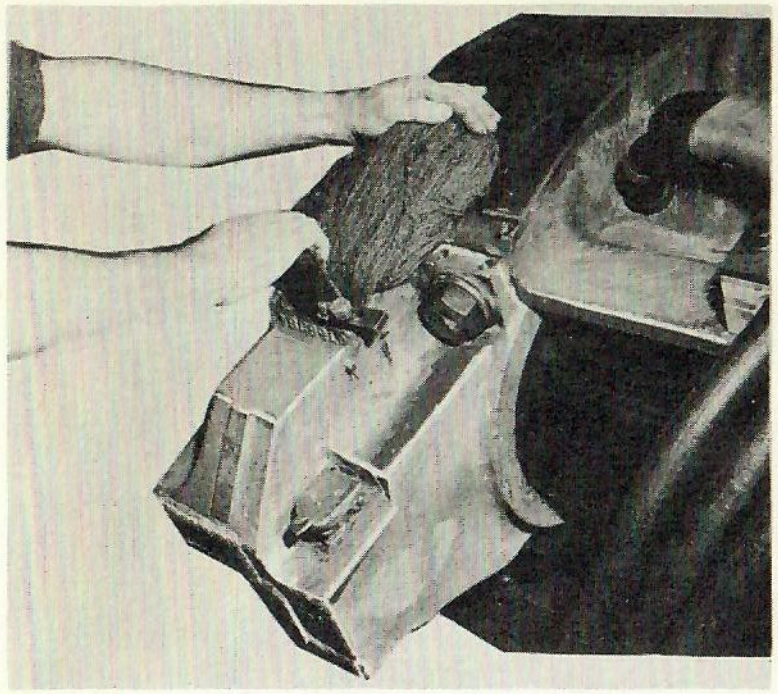

Fig. 18-10
Lay top end of wick back out of the way and hold it there with packing iron.

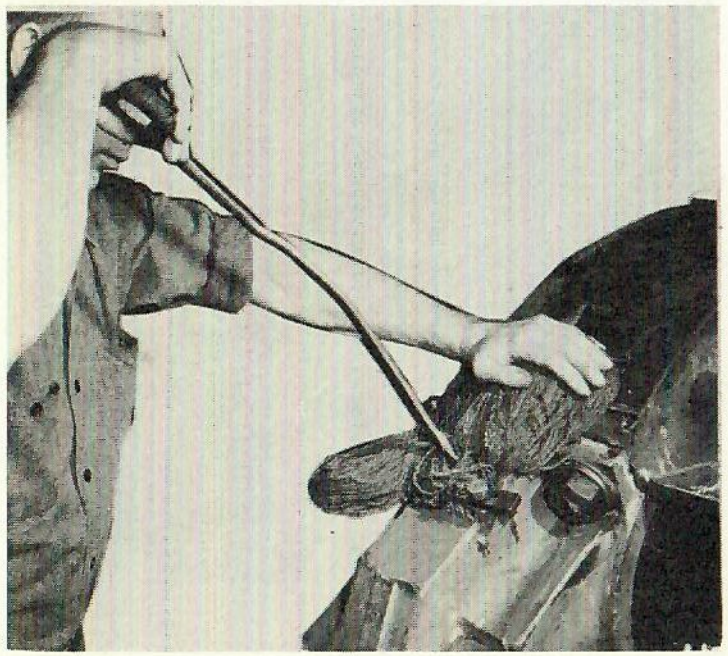

Fig. 19-10
Pack remaining three skeins back and forth between the wick and waste pusher.

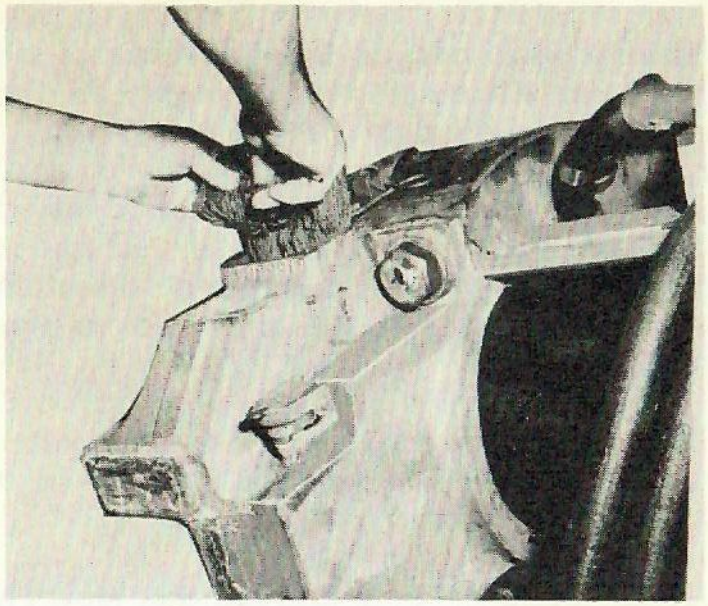

Fig. 20-10
Remove fixture holding waste pusher and fold back the top end of wick.

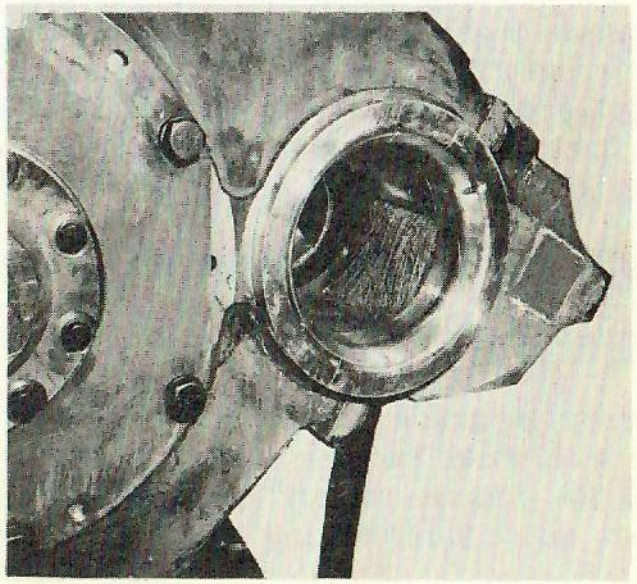

Fig. 21-10
View from axle side, showing wick in the window of axle lining.

3. Insert fixture or wedge (wood or fiber) to depress the waste pusher. See Fig. 15-10.

4. Make a wick out of three skeins of long-fiber wool waste and comb it thoroughly so that skein strands are straight. See Fig. 16-10.

5. Fold a length of about six inches of the wick over the wide packing tool and insert it into axle cap. See Fig. 17-10. Push it firmly to bottom of axle cap, allowing the six-inch fold to spread out well.

6. The end of wick that protrudes from cap is then laid back out of the way and held there with the wide packing tool. See Fig. 18-10.

7. Then, using the long thin packing tool, insert one of the remaining skeins, laying it back and forth between wick and waste pusher. See Fig. 19-10.

8. Pack remaining skeins in same manner as described in item 7 above.

9. Remove the waste-pusher depressing fixture (or wedge) from cap and roll that portion of wick which protrudes from axle cap back over top of the backing waste and tuck it in securely. See Fig. 20-10.

10. Replace cover and fill cap with oil as specified.

Filling the Axle Cap

1. Use a good grade of electric car oil, suitable for use with waste packing or felt lubricators. Unless the climate is very uniform throughout the year, use a summer and winter grade of oil.

   Summer grade of oil should have a viscosity (Saybolt Universal) at 100 F of 650 to 710 seconds and at 210 F of 64 to 66 seconds.

   Winter grade should have a viscosity (Saybolt Universal) at 100 F of 410 to 460 seconds and at 210 F of 54 to 56 seconds.

2. Open filler-pipe cap and gage depth of oil by inserting a clean rod into oil well, holding it parallel with axis of filler pipe.

3. If bearing is not sufficiently full, pour oil into oil well until proper depth of oil is reached.

FELT-WICK LUBRICATED AXLE CAPS

Model 5GE731D5 (also those motors of other model numbers which have been changed over by use of conversion kit, Cat. 6756988G1), is equipped with felt-wick lubricators instead of wool waste to conduct oil from cap to journal surface. See Fig. 22-10 for cross-section diagram of cap and Fig. 23-10 for assembly of lubricators.

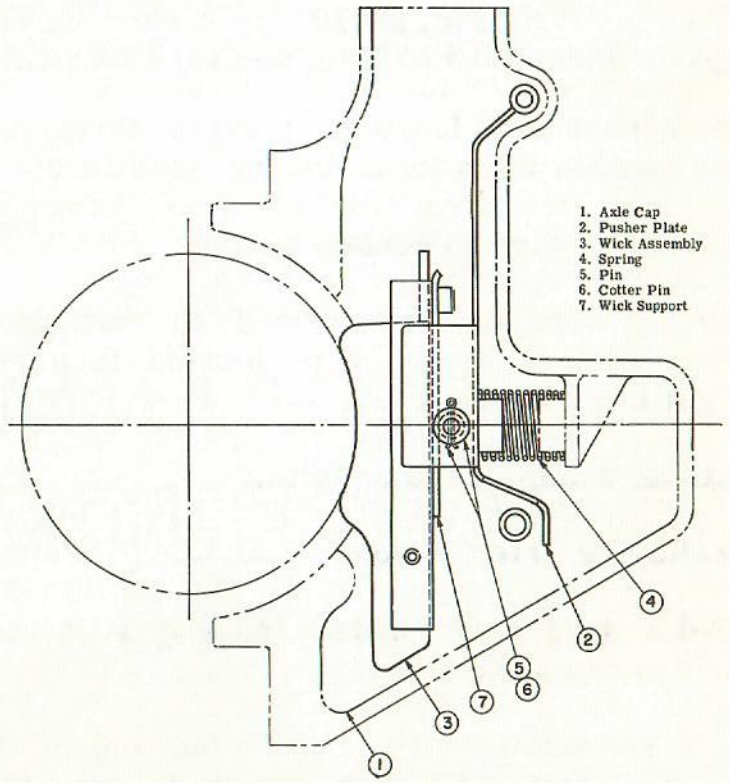

Fig. 22-10
Section view of axle cap with felt wick lubricators installed.

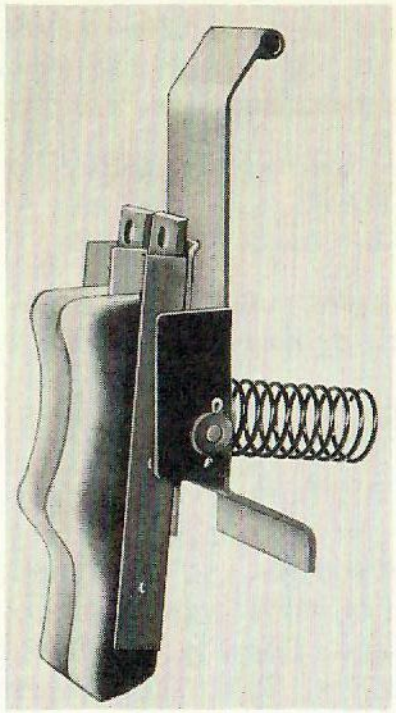

Fig. 23-10
Set of parts assembled to form one wick lubricator.

Inspect these wick lubricators every three months; reject and replace them for following conditions:

1. Glazed or burned contact surface.

2. Felt is worn or compressed so that thickness from back of lubricator to journal face is less than 1 1/2 inches.

3. Sludge accumulated on felts.

4. Felts are water soaked.

5. Felts have deteriorated from caustic residue left in cap after cleaning.

If felts are satisfactory, brush the contact surface of wicks with a fine, stiff, fiber brush to remove dirt. Reinstall in cap. ALWAYS REPLACE TWO WICKS AT A TIME.

Remove Wick Lubricators as Follows

1. Remove inspection cover from cap.

2. Insert a rod hook (see Fig. 24-10) in the hole provided at top of each wick assembly. Pry the wick assembly, using a long screw driver, toward journal face to disengage pin from hole in support.

3. Lift wick assembly from axle cap.

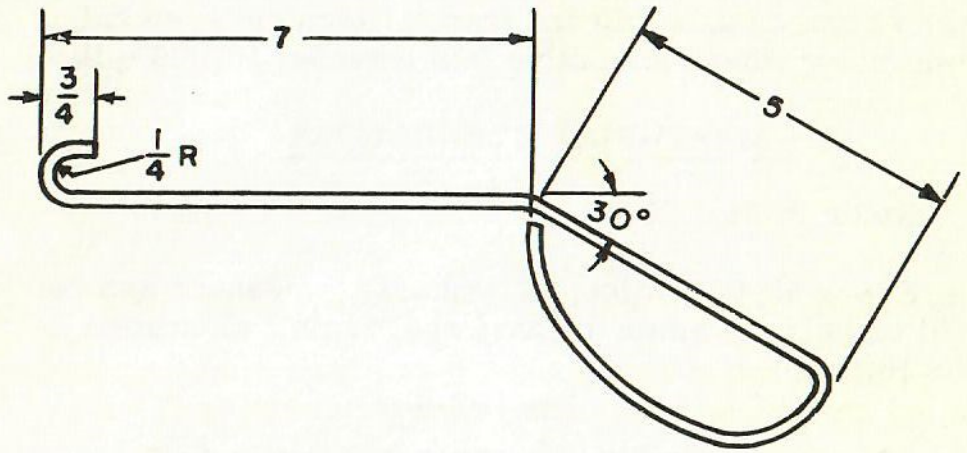

Make from 3/16 in. Diameter
Round Steel Rod, 19 in. Long

Fig. 24-10
Hook for removing wick lubricator.

Install Wick Lubricators as Follows

1. Insert wick assembly through inspection opening, and push it down into position, making certain that the pin engages with hole in support.

2. Align wicks on journal surface. Replace inspection cover.

3. Check oil level in cap and refill, if necessary. See instructions under "Filling the Axle Cap" above.

AXLE CAPS AND LININGS

Axle linings, when correctly assembled, are tightly clamped between magnet frame and axle caps to prevent movement and wear on the outside diameter; parts are specially machined to provide this fit. NOTE: Axle caps are machined with the magnet frame and are not interchangeable between machines. Each cap is stamped with the serial number of the frame with which it is machined, and must always be assembled with that machine.

These motors are shipped new with two 0.007-inch shims between axle cap and frame. Remove these shims from motor when locomotive has traveled 10,000 miles.

MEASURING CLEARANCES

Refer to Fig. 25-10.

Every 50,000 miles, or annually, measure and record end play of motor on axle and radial clearance of axle lining.

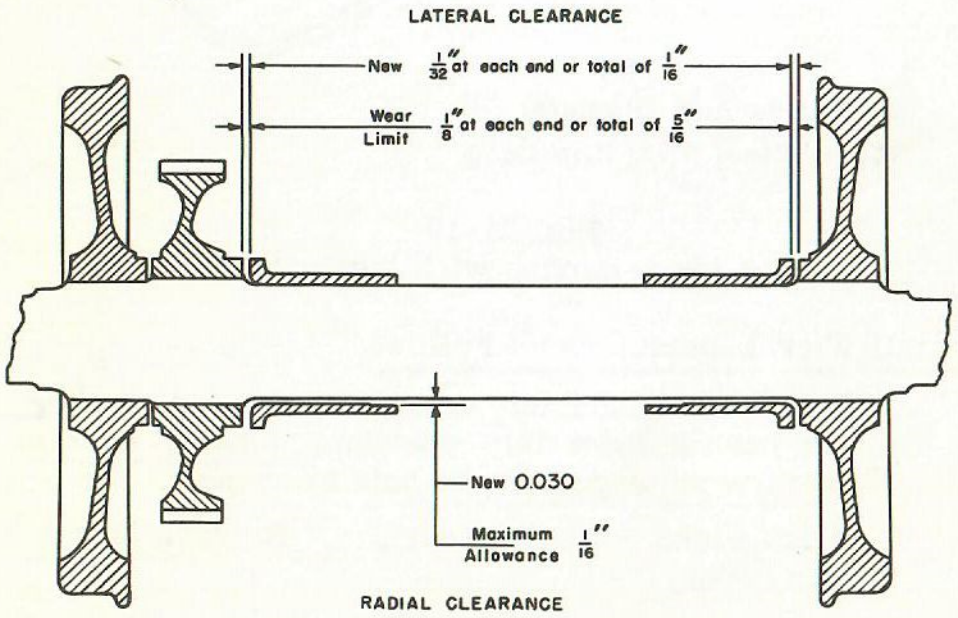

Fig. 25-10
Lateral and radial clearances of motor axle linings on locomotive axle.

To measure end play, force motor as far as it will go toward pinion end, using a jimmy bar or jack. Do not use jimmy bar against commutator-end bearing cap; use it against magnet frame or framehead. This brings pinion-end lining flange against the gear hub. Measure end play with a feeler gage between commutator-end lining flange and wheel hub.

An easier method is to clamp an indicator to commutator-end axle cap so that pointer rests against the wheel. Force motor as far as it will go one way along axle. Read indicator and then force motor as far as it will go in other direction and again read indicator. Difference in indicator readings represents lateral clearance or end play. When this clearance measures 5/16 inch or more, replace linings.

Measure radial clearance with a thickness gage (feelers) through inspection door in axle dust guard, or by jacking axle end of motor up and down and measuring radial movement with dial indicator clamped on cross-frame member.

REPLACING LININGS

To replace axle linings without removal of motor from truck, place truck over a pit, drain oil from axle cap, and remove axle cap. Support axle side of motor, either by jacks in the pit, or, if locomotive has been untrucked, by an overhead crane, to lift motor weight off the axle. It will probably be necessary to force motor away from axle by use of a jimmy bar, to free inner axle lining.

Remove inner lining by rotating it away from the key, around top of axle. Check journals for roughness. Install new lining by rotating inner half into position over top of axle, so that keyway on lining matches the key in axle preparation on frame. Install outer half of new lining in position and reassemble axle cap, after it has been thoroughly cleaned. Draw axle-cap bolts up tight and lock them. Replace dust guards if they have

been removed. Examine waste packing (or wick lubricators) in axle cap; if necessary, repack bearing. Fill axle cap with fresh oil.

GEAR CASES

Use a good grade of lubricant, heavy enough to maintain a protective film on the gear teeth at heavy loads and yet tend to level back at operating temperature. Use summer and winter grades. Recommended gear compound should have a Furol Viscosity of approximately 525 seconds at 210 F for summer grade and 210 seconds at 210 F for winter grade (Texaco Crater No. 5 and 2, respectively, or equal).

Never permit gearing to run dry, or the result will be excessive wear of gear and pinion teeth. Maintain a sufficient level of lubricant in bottom of gear case to cover the gear teeth (approximately 10 pounds, initial filling).

During overhaul, remove all grease and dirt from inside gear case. If necessary, immerse gear case in a solution of caustic potash, and through steam injection, boil case until it is clean. Hot rinse and refinish inside of case with a coat of Glyptal No. 1201 red enamel or other oil-resistant finish. Replace felt seals.

CAUTION: DO NOT BURN OLD GREASE AND OIL FROM GEAR CASE OR WARPING WILL RESULT.

POLARITY TEST OF FIELD COILS

Check field-coil connections with Connection Diagram.

Check for reversed field coils by exciting the field from an external source (welding set or 6-volt battery); from 35 to 100 amperes will be sufficient.

Place a variable resistance (not to exceed two ohms) in series with the 6-volt battery. Connect positive side of battery to terminal marked "I" on the coil

and negative side of battery to terminal marked "0". See Fig. 26-10. The connection diagram indicates correct field-coil polarity when current flow is as shown.

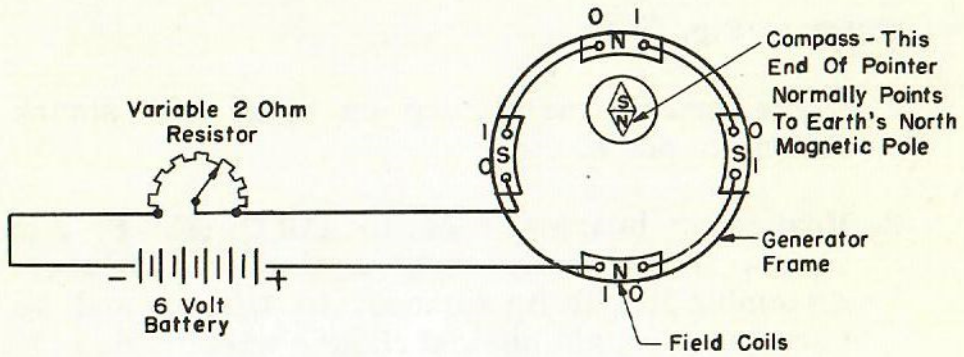

Fig. 26-10
Diagram of connections for checking polarity of field coils.

Make certain that compass to be used has correct polarity. The north pointer of compass will normally point to the earth's magnetic north pole. Approach the pole to be checked with the compass, making sure that the needle is free to swing. The north end of compass will be attracted by a south pole, and a north pole in machine will attract the south end of needle. Check compass before and after a polarity check to make sure that it has not been accidentally reversed; in some cases, the intense field strength can reverse polarity of compass.

ASSEMBLY OF MOTOR

ASSEMBLY OF BEARINGS

Assembly is essentially the reverse of disassembly. Heat parts having shrink fits in a bath of clean, hot oil or in an oven to approximately 110 C (230 F) before mounting. Press outer bearing race with rollers into frameheads before assembling frameheads to frame.

Be careful to have outer bearing race parallel with bore of framehead when pressing the race into place. On reassembly, use new gaskets, 0.021-inch thick.

ASSEMBLE COMMUTATOR-END BEARING

Refer to Fig. 5-10.

1. Place inner bearing cap on shaft and shrink flinger in place.

2. Heat inner bearing race to 110 C (230 F) and shrink it on shaft, tight against the flinger. Assemble it with lip adjacent to flinger and be sure race is tight against flinger when cold.

3. Press outer bearing race with rollers into framehead fit; alternate method is to heat framehead to 100 C (212 F) and drop the bearing into framehead bore.

ASSEMBLE PINION-END BEARING

1. Place inner bearing cap on shaft and shrink flinger on shaft, tight against the sleeve.

2. Heat inner bearing race to 110 C (230 F) and shrink it on shaft tight against the flinger. Be sure it is tight against flinger after it has cooled.

3. Press outer race with rollers into framehead fit; if preferred, heat framehead to 100 C (212 F) and drop bearing into framehead bore.

4. Measure out 22 ounces of G-E ball-bearing grease, Type D6A2C4; pack about 15 ounces in inner bearing cap and over inner bearing race, three ounces around cage and rollers and balance in grease chamber of outer bearing cap.

5. Place gasket on inner bearing cap and slide framehead with bearing into position on shaft.

6. With outer gasket in place, assemble outer bearing cap to framehead and secure it with capscrews.

7. Do not assemble labyrinth sleeve on shaft until after armature has been assembled in motor frame.

ASSEMBLY OF MOTOR

Refer to Fig. 5-10.

1. Assemble flanges and coils on pole pieces. Bolt pole pieces into frame, make connections per Connection Diagram Fig. 27-10 and "hot draw" coils into place as follows:

   Heat coils to 100 C by passing a current of approximately 800 amperes through field circuit for about 30 minutes. Draw pole-piece bolts up tight, with coils hot. Fill countersinks around pole-piece bolt heads on top of motor with G-E No. 837 compound, to keep out water. Always use new lock washers under pole-piece bolt heads.

2. Assemble brush holders into frame; move them well back from commutator to avoid interference when assembling the armature. Fasten and insulate connections and install cables.

3. Assemble commutator-end framehead (with bearing assembled) to the frame and tighten framehead bolts.

4. Place frame in a vertical position with framehead face level, commutator end down. Have ready an armature with bearings assembled. See ASSEMBLY OF BEARINGS above.

   Screw an eye bolt over end of shaft (see Fig. 28-10) and wrap heavy paper around commutator for protection. Assemble commutator-end bearing pilot (see Fig. 7-10) to end of shaft to guide armature into commutator-end bearing.

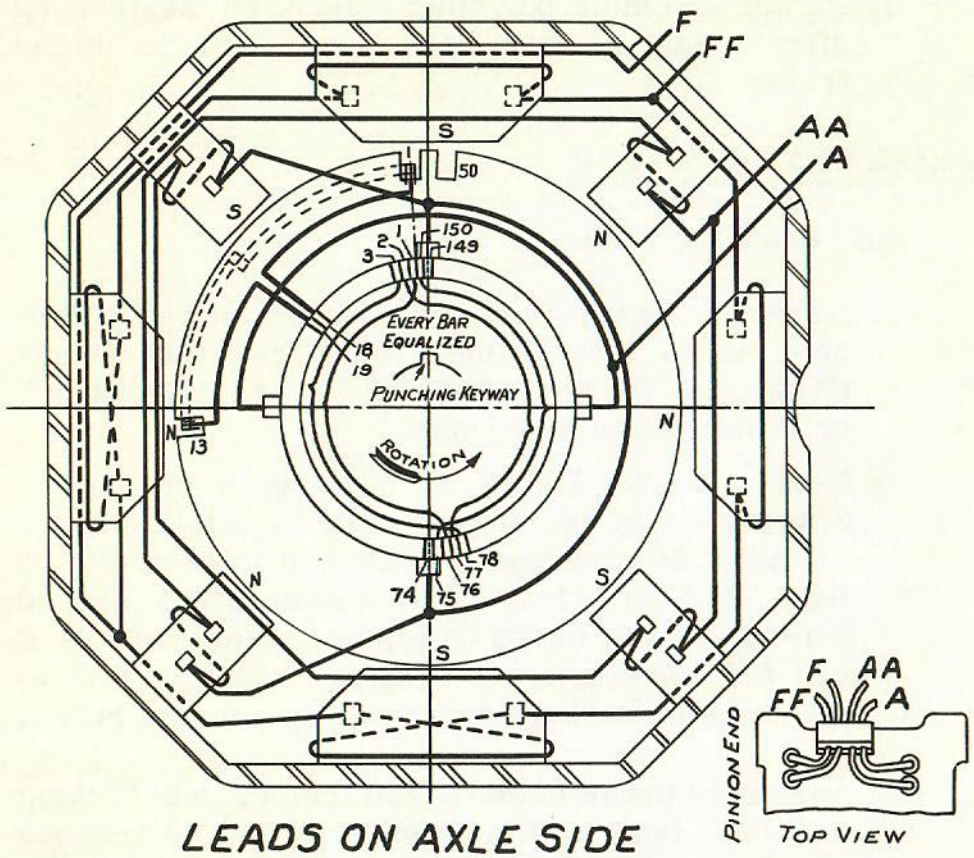

LEADS ON AXLE SIDE

MOTOR	TURNS	ARMATURE COIL	EXCITING FIELD	COMMUTATING FIELD
GE-731 A3, B2, C2 & C3.	1	CAT. 4748551G1 EQUALIZER CAT. 4729679G1	BOTTOM AND SUSP. SIDE CAT. 6751106G1 AXLE SIDE CAT. 6751106G2 TOP SIDE CAT. 6751106G3	CAT. 6751105G1
GE-731 B5, C5, D2 & D3.	1	CAT. 4748551G1 EQUALIZER CAT. 4729679G1	BOTTOM AND SUSP. SIDE CAT. 6751106G4 AXLE SIDE CAT. 6751106G5 TOP SIDE CAT. 6751106G6	CAT. 6751105G1

70338

Fig. 27-10
Connection diagram for GE-731 motor.

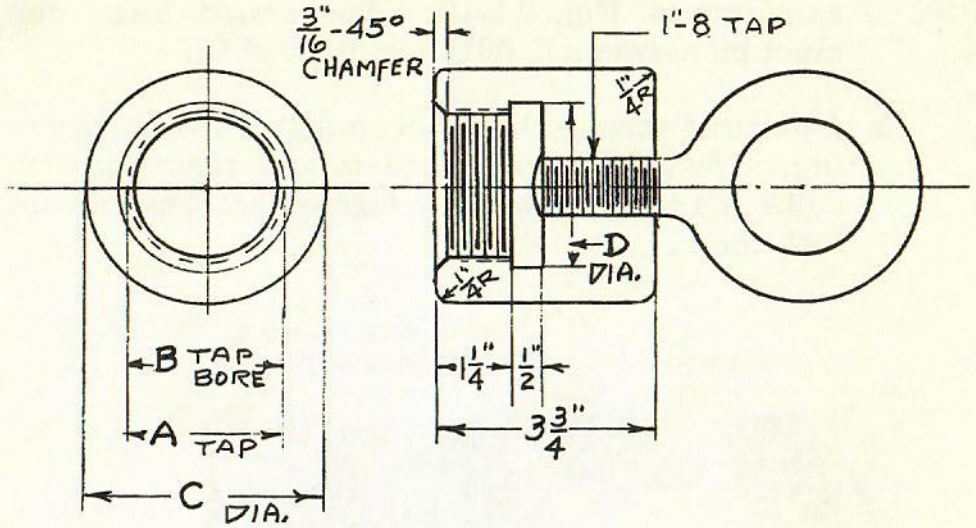

A TAP	B TAP BORE	C DIA.	D DIA.
$2\frac{1}{2}$-8	$2.365^{+.005}_{-.000}$"	4"	$2\frac{5}{8}$"

Fig. 28-10
Eye-nut assembly for lifting GE-731 armature.

5. Measure out 10 ounces of G-E ball-bearing grease, Type D6A2C4; pack five ounces in inner bearing cap and over inner bearing race and place balance in outer bearing cap.

6. Lift armature and lower it part way into frame. See Fig. 6-10. Assemble guiding studs into commutator-end inner bearing cap so that bearing cap will be properly lined up with holes in framehead. Lower armature into frame until pinion-end framehead starts into frame fit.

7. Insert pinion-end framehead bolts and tighten bolts evenly to pull armature into place. Be extremely careful to draw down evenly on all bolts to prevent cocking the bearing assembly and damaging the races.

8. Remove bearing pilot from end of shaft. Check radial clearance between commutator-end bearing

rollers and inner race, using a feeler gage as shown in Fig. 29-10. Assembled clearance must be between 0.0015 and 0.0054 in.

9. Assemble thrust ring on commutator-end bearing. Assemble locking plate and secure it with bolts and lock washer. Tighten bolts but do not lock them.

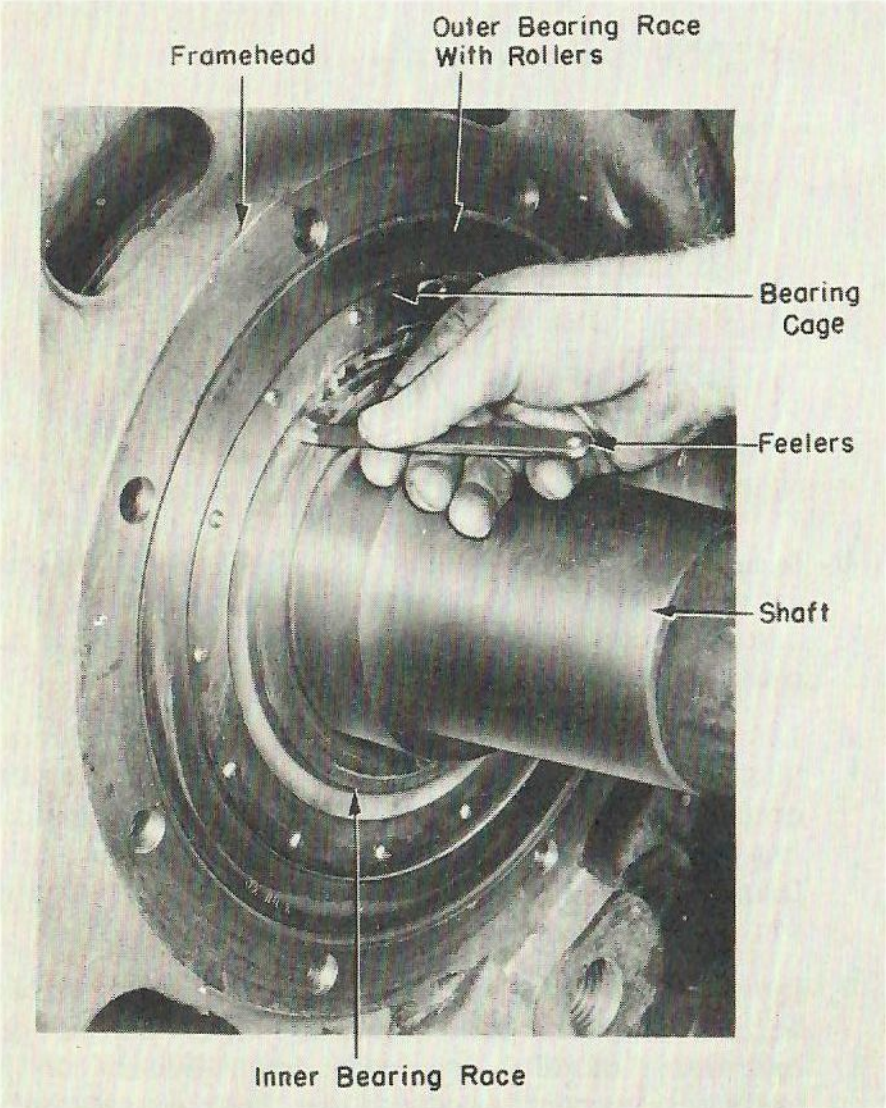

Fig. 29-10
Method of checking internal clearance of large roller bearing after assembly in motor.

10. Place motor in a horizontal position and tighten all framehead bolts.

11. Clamp an indicator to commutator end of armature with pointer against outer race of bearing. Push armature toward commutator end to eliminate end play and rotate it to see if outer raceway is true. If outer raceway is out more than 0.002 inch, check the framehead to see that all bolts are pulled up tight and that there are no burrs or dirt between register fits of framehead and magnet frame. If cause cannot be located, assemble a new bearing.

12. Force armature to commutator end and tighten bolts through the locking plate; lock bolts by bending up the lock washer.

13. With gasket in position, assemble outer bearing cap and secure it with bolts through framehead into inner cap.

14. Check armature end play; this should be between 0.005 and 0.015 inch.

15. Remove pinion-end outer bearing cap and check alignment of outer bearing race as in item 11 above, by clamping an indicator to the shaft. See Fig. 30-10. If outer race runs out more than 0.003 inch, check to be sure framehead bolts are pulled up tight and that there is no dirt or burrs between register fits of framehead and magnet frame.

16. Check radial clearance between pinion-end bearing rollers and bearing inner race, using a feeler gage. See Fig. 29-10. The assembled clearance must be between 0.0024 and 0.0069 in.

17. Check bearing to be sure it has been packed with grease; with gasket in position, assemble pinion-end outer bearing cap.

18. Heat outer sleeve to 110 C (230 F) and shrink it on the shaft tight against inner race of bearing.

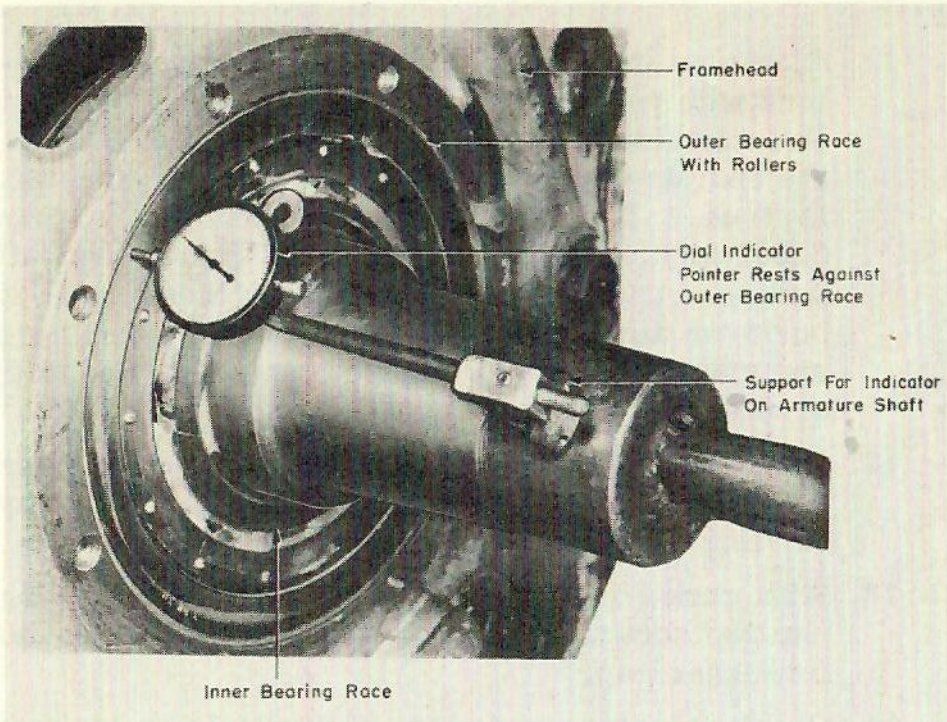

Fig. 30-10
Method of checking alignment of bearing after assembly in motor.

19. Adjust brush holders for radial clearance of 1/16 to 3/32 inch to the commutator. Be sure that clamp bolts are pulled up tight and that there is clearance between clamp halves.

20. Install a good set of brushes. Use grade recommended by General Electric Company; all brushes in machine should be of same grade. See Fig. 31-10 for correct method of installing brushes.

21. Clean out interior of motor to remove dirt, tools, or other foreign material. Assemble commutator covers.

22. Mount pinion on shaft. See instructions for mounting pinion.

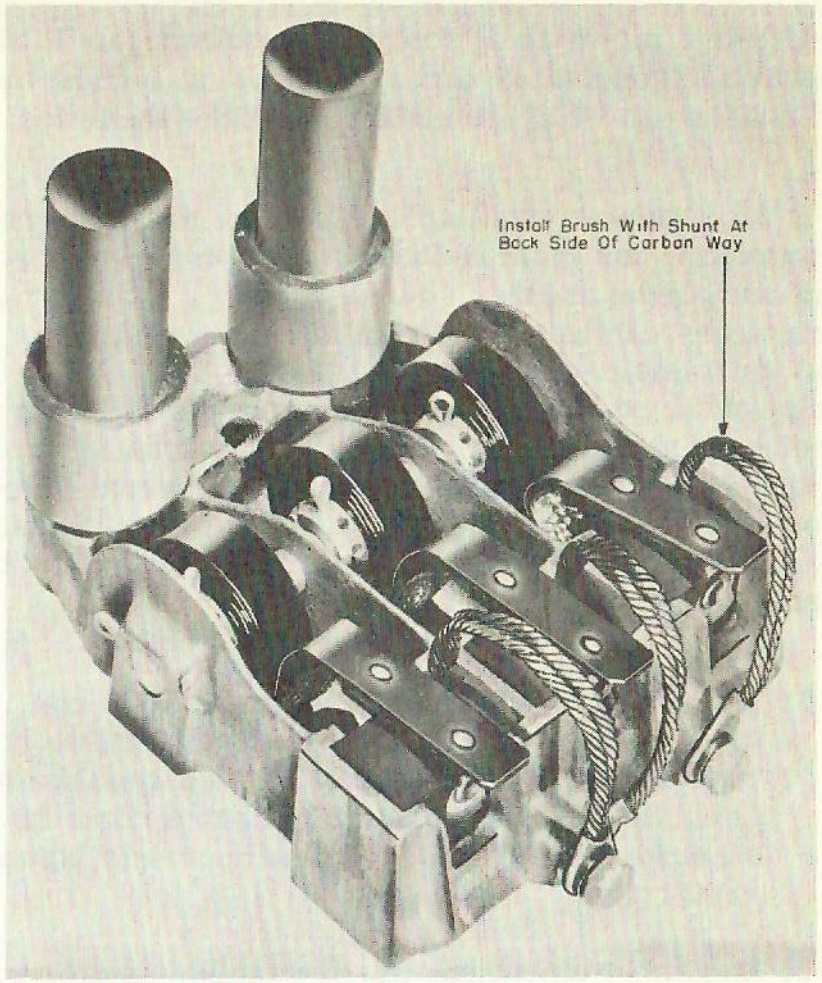

Fig. 31-10
Correct method of installing set of brushes.

INSPECTION AFTER REPAIRS

After completing repairs or reconditioning, make a careful check to be sure that no foreign matter remains in the machine, and that there are no loose brushes or other obstructions on the commutator. Check connections with Connection Diagram. See that all bolts are drawn up tightly and properly locked.

TESTING AFTER OVERHAUL

After motor has been reconditioned and reassembled for return to service, make following tests to be sure motor operates satisfactorily.

Connect motor to a source of power (such as an arc-welding generator) and run it as a series motor. Sand brushes to fit commutator and make these tests.

If facilities are available, run the motor by separately exciting the main field at approximately 500 amperes and, from another source of power, apply voltage to armature circuit (up to maximum voltage of 1100 volts) until desired speed is obtained. Additional speed may be obtained by carefully reducing the field current. Do not exceed 2360 rpm. These conditions of voltage and speed may be obtained by use of General Electric motor test set, or by driving the armature with another motor and separately exciting the field of motor being tested.

1. Run the motor for five minutes at 1000 rpm. Increase speed to 1500 rpm and run for two hours. Note bearing temperatures, which should not exceed 70 C. Run until temperature remains constant for 30 minutes. Then increase speed to 2300 rpm.

2. Measure vibration when running motor up to speed; it should not exceed 0.004 inch. If excessive, rebalance the armature.

3. Check commutator for roughness and be sure brushes are riding properly. Measure commutator run-out; this should not exceed 0.001 inch.

4. Listen for noisy bearings, preferably by use of a listening rod. Repair or replace defective bearings.

5. Measure impedance of the fields. With 60 cycle a-c and armature assembled, pass 18 amperes through exciting field; voltage drop across total field should be between 6.2 and 7.6 volts. With 24 amperes through commutating field, total drop should be between 6.2 and 7.6 volts.

6. Apply high-potential test to windings of assembled motor at 2000 volts, a-c, to ground for one minute.

The following table indicates approximate volts and amperes required to run the motor as a series motor with no load:

RPM	VOLTS	AMPERES
1000	65	33
1500	94	36
2000	125	38
2500	155	39

RESURFACING COMMUTATOR IN LOCOMOTIVE

1. Take out brushes and remove oil and grease from brush rigging, cables, commutator cap and similar critical insulating surfaces. Preferably this should be done from a pit, but it can be done from the road bed through inspection openings.

2. Raise the wheels so that motor and axle are free to rotate. Make sure that brake shoes do not drag.

   Axles with waste-packed journals may be raised with temporary journal bearings resting in the well of journal box. An alternate method is to raise end of truck until wheels are off the rails, and then jack carefully under motor-support bearings until they take the weight of axle and wheels only and none of the truck weight.

3. Jam all remaining wheels so locomotive cannot move and block up all raised parts.

4. With all brushes removed, insert an old brush in two accessible brush holders, preferably in alternate paths.

5. Shut down traction-motor blowers, or if this is not possible, insert a baffle in air duct or close off the air intake to fans so that dust will not be blown about.

6. Install commutator grinder, Cat. 8837582G1, in bottom commutator opening on suspension side; this is safest place and will allow most of the grinding dust to fall out. See Fig. 32-10. Grinder assembly consists of a "Midget" grinder, mounting bracket, resurfacing stones and various capscrews and set screws as indicated in Fig. 33-10. Install grinder as follows:

   a. Bolt grinder to mounting bracket with four capscrews provided.

   b. Remove cover from bottom inspection opening on suspension side.

   c. Install grinder in motor by bolting it into cover bolt holes; use two capscrews and lock washers provided with fixture. Base of mounting bracket will be on outside of motor frame.

   d. Place the two jam nuts on set screws and screw them into tapped holes in corners of base of mounting bracket. These are used to adjust position of grinder with respect to the commutator.

   e. Assemble resurfacing stones in grinder. These stones will have to be "toed-out" somewhat, so that they will cover entire width of commutator when grinder is traversed from side to side; they still must overlap in center of commutator. Grind a taper on ends of stones to make them ride flush on commutator surface during grinding.

   f. After stones are assembled, traverse grinder to one end of commutator surface and check clearance between commutator surface and either stone with a feeler gage. Then traverse grinder to other end of commutator and check clearance under same stone; it should be same as first check. If clearance changes, adjust the mounting bracket by means of the set screws until clearances are the same.

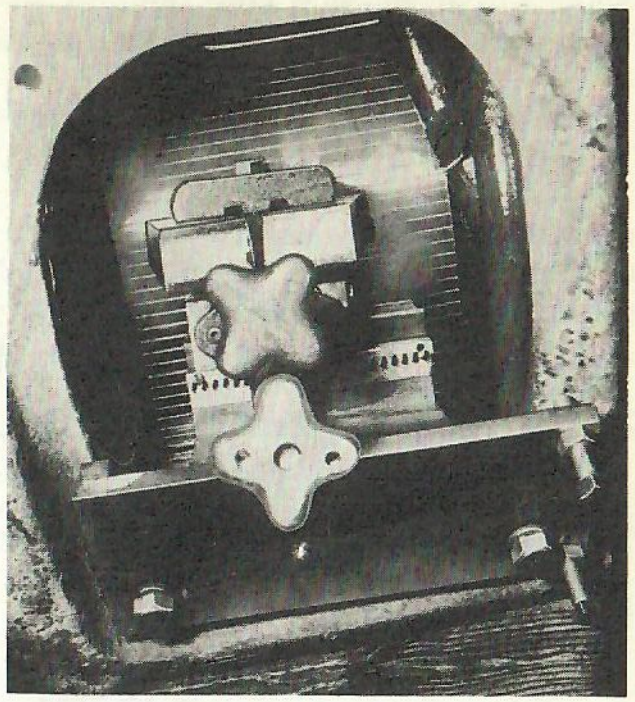

Fig. 32-10
Commutator grinder installed in bottom commutator opening of motor.

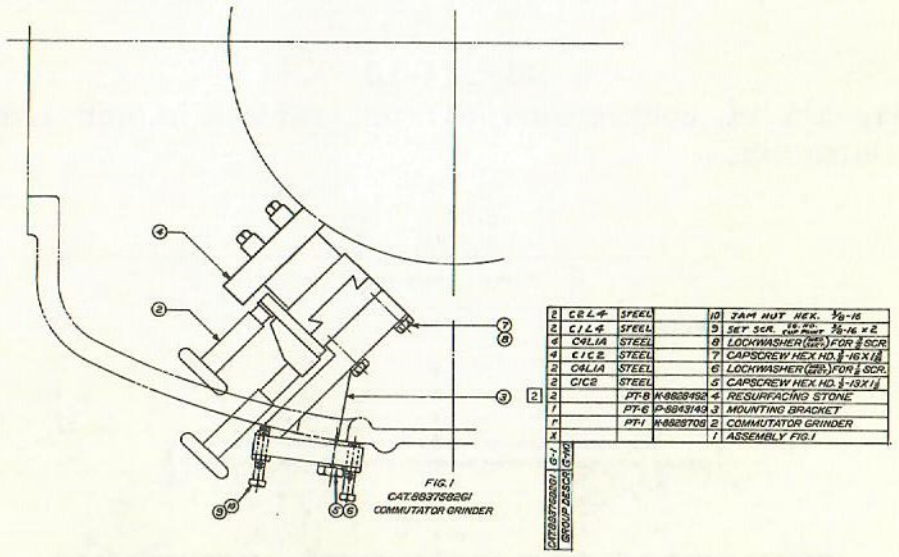

Fig. 33-10
Installation of commutator grinder in GE-731 motor.

Then run up the jam nuts tight on set screws to maintain the adjustment during grinding.

g. Back the stones away from commutator slightly with the feed handle.

7. Connect motor to a source of power, suitably controlled to drive it at a speed of 1000 to 1500 rpm for grinding. Two methods are available as follows:

a. Disconnect motor leads from locomotive wiring and connect motor as a series motor to be driven from an outside source of power such as a welding set (3 to 5 kw at 100 volts). See diagram of connections, Fig. 34-10.

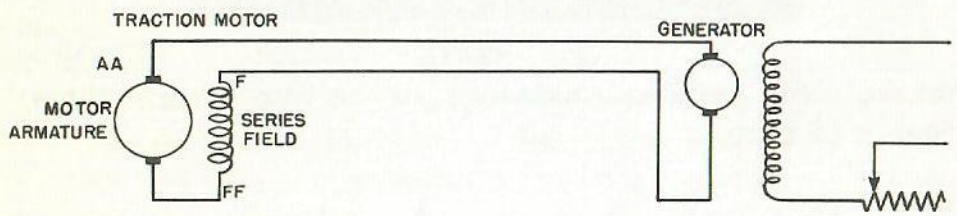

Fig. 34-10
Diagram of connections to run traction motor from welding set.

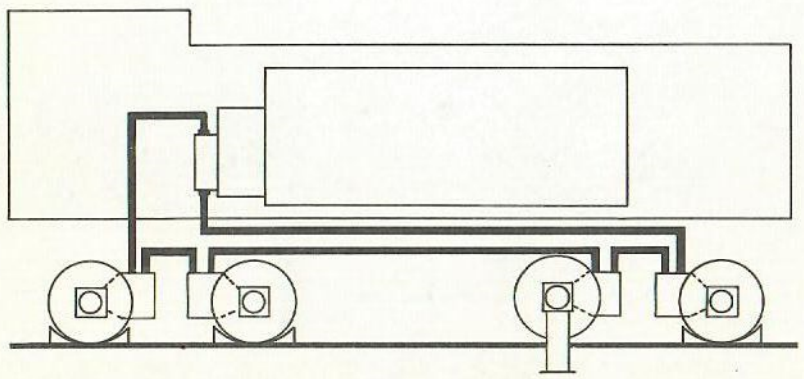

Fig. 35-10
Method of running motor from power plant for resurfacing of commutator.

b. Run motor from locomotive power plant; see Fig. 35-10. With wheels blocked, traction motor can be run for stoning commutator without disturbing locomotive connections, by going into first operating position. Current required is so low, no damage will result to the stationary motors through which current flows.

8. Run motor at 1000 to 1500 rpm and stone commutator as follows:

a. Advance feed handle until stones contact commutator. Then traverse grinder across commutator completely before advancing the feed again.

b. Continue traversing back and forth across commutator and advancing feed handle until bad spots are cleared up. Clean the stone frequently and keep it free of copper. Maintain good brush contact to avoid arcing and smearing of commutator. Check often to see that brushes are long enough and free in brush holders. Stoning can also be done by cutting off power and letting motor coast with the wheels acting as flywheels.

c. When enough copper has been removed to clean up commutator, traverse grinder several times back and forth without advancing feed handle, to remove any scratches and provide finish surface.

9. When grinding has been completed, stop motor and remove grinder assembly from motor.

10. Start motor again and blow it out well with dry, compressed air.

11. Stop motor and brush out slots between commutator bars with a bristle brush (not wire). Wipe off insulators and creepage surfaces.

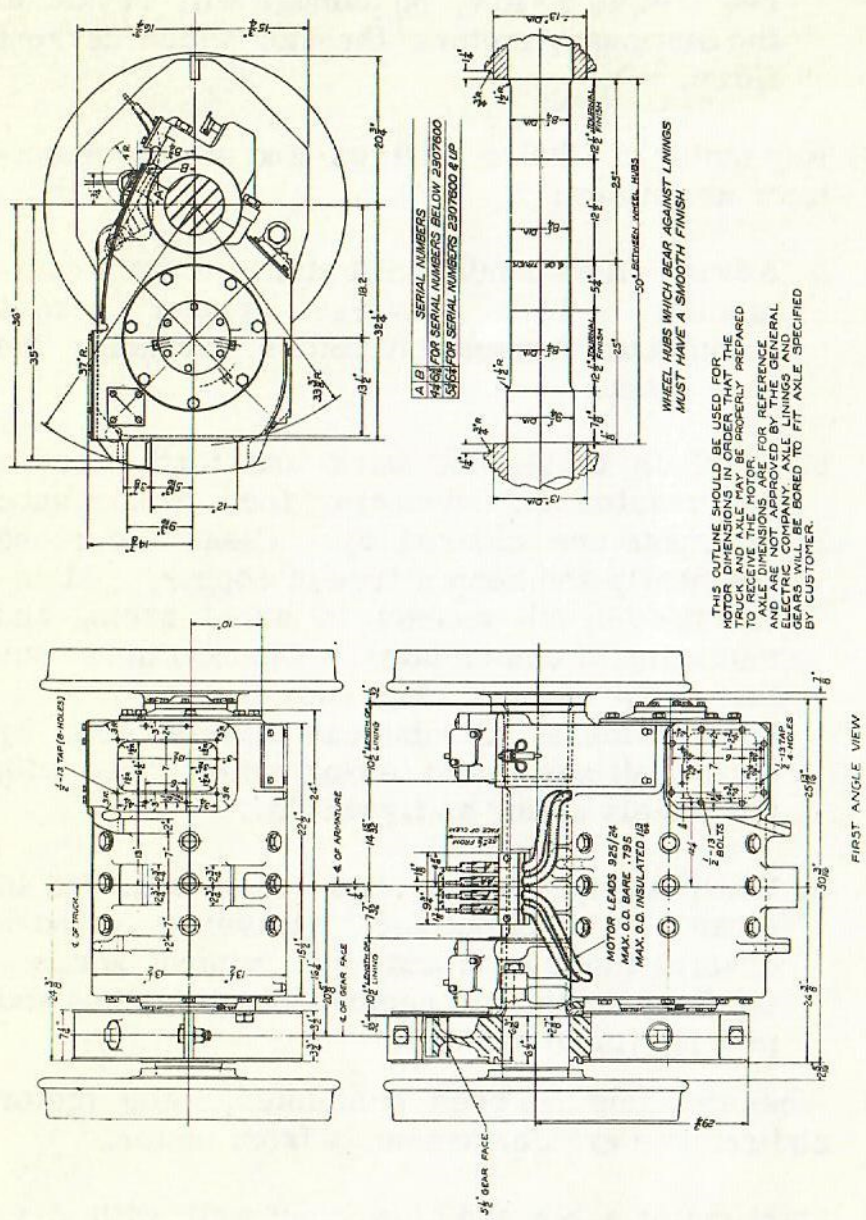

Fig. 36-10
Outline dimensions of GE-731 motor.

12. Start motor again and blow out with compressed air.

13. Stop motor and install complete set of good brushes. Assemble inspection covers.

14. Remove all blocking and return locomotive to original condition.

NOTES

EXCITER-AUXILIARY GENERATOR SET

Models 5GMG139A1
5GMG139A2
5GMG139A3

MAINTENANCE DATA

Classification

Auxiliary Generator . . . 6-pole, commutating-pole, direct-current generator

Exciter . . . . . 4-pole, non-commutating, split-pole, direct-current generator

Nominal Rating

Auxiliary Generator . . 5 kw, 75 volts over range of 650/1760 rpm

Resistances at 25 C (Average)

Auxiliary Generator - Armature . . . . 0.0555 ohm
Exc. Field . . . 10.71 ohm
Comm. Field . . 0.0275 ohm

Exciter - Armature . . . . . 0.0450 ohm
Exciting Field . . . . . 3.77 ohm
Differential Field -
Model 5GMG139A1 . . . . . 0.0002 ohm
Model 5GMG139A2 . . . . 0.000156 ohm
Model 5GMG139A3 . . . . 0.000123 ohm

Brush-Holder Clearance

to Commutator . . . . . 1/16 to 3/32 inch

Brush Data

Pressure . . . . . 46 to 52 oz
Size . . . . . 1/2 by 1 3/4 by 1 3/4-inch long
Minimum Length . . . . . 3/4 in.

Nominal Air Gap

Aux. Generator - Exc. Poles . . . . . 0.050 in.
Comm. Poles . . . . . 0.065 in.
Exciter Poles . . . . . 0.100 in.

Commutator Side Mica
Thickness - Exciter. . . . . 0.020 in.
Aux. Generator . . . . . 0.030 in.
Grooving Depth . . . . . 3/64 in.

Commutator Diameter
New Commutator . . . . . 8 in.
Minimum Permissible . . . . . 7 1/2 in.

Bearing Grease Capacity (2/3 Full)
Shaft-Extention End . . . . . 2 1/2 oz
End Opposite Extension . . . . . 2 1/4 oz

Weights
Complete Set . . . . . 800 lb
Armature Only . . . . . 310 lb

LUBRICATION

At overhaul, disassemble bearings from shaft, thoroughly clean to remove old grease and dirt, inspect parts for wear or defects, and on reassembly, pack bearings with fresh G-E ball-bearing grease, Type D6A2A3.

DISASSEMBLY OF SET

REMOVE ARMATURE FROM FRAMES

Refer to Fig. 1-11 and Fig. 2-11.

1. Remove covers, lift or remove brushes and wrap heavy paper around both commutators for protection in handling.

2. Take off pulley from shaft extension.

3. Remove grease and overflow fittings from both bearing caps.

4. Take out joint bolts at center of frame.

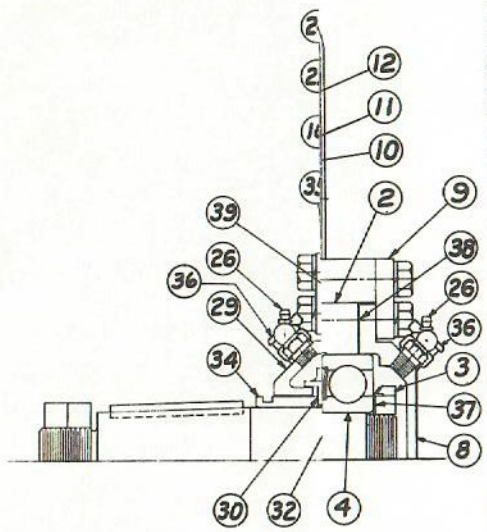

39 GASKET (AUX. GEN.)
38 GASKET (EXC.)
37 LOCKWASHER (EXC.)
36 OVERFLOW FITTING
35 END PLATE (AUX. GEN.)
34 COLLAR (AUX. GEN.)
33 FLINGER INNER (AUX. GEN.)
32 LOCKWASHER
31 BEARING (AUX. GEN.)
30 BEARING NUT (AUX. GEN.)
29 BEARING CAP (AUX. GEN.)
28 COMMUTATOR (AUX. GEN.)
27 SPACING COLLAR (AUX. GEN.)
26 GREASE FITTING
25 BRUSH HOLDER SUPPORT (AUX. GEN.)
24 BRUSH HOLDER BUS RINGS (AUX. GEN.)
23 ARMATURE WINDING (AUX. GEN.)
22 FIELD COILS (AUX. GEN.)
21 MAGNET FRAME (AUX. GEN.)
20 POLE PIECE BOLTS
19 JOINT BOLTS
18 FAN
17 POLE PIECE BOLTS (EXC.)
16 MAGNET FRAME (EXC.)
15 FIELD COILS (EXC.)
14 ARMATURE WINDING (EXC.)
13 BRUSH HOLDER
12 BRUSH HOLDER BUS RINGS (EXC.)
11 BRUSH HOLDER SUPPORT (EXC.)
10 BRUSH HOLDER SUPPORT BOLT
9 END PLATE (EXC.)
8 BEARING CAP
7 COMMUTATOR (EXC.)
6 SPACING COLLAR (EXC.)
5 FLINGER INNER (EXC.)
4 BEARING (EXC.)
3 BEARING NUT (EXC.)
2 BEARING HOUSING (EXC.)
1 SHAFT

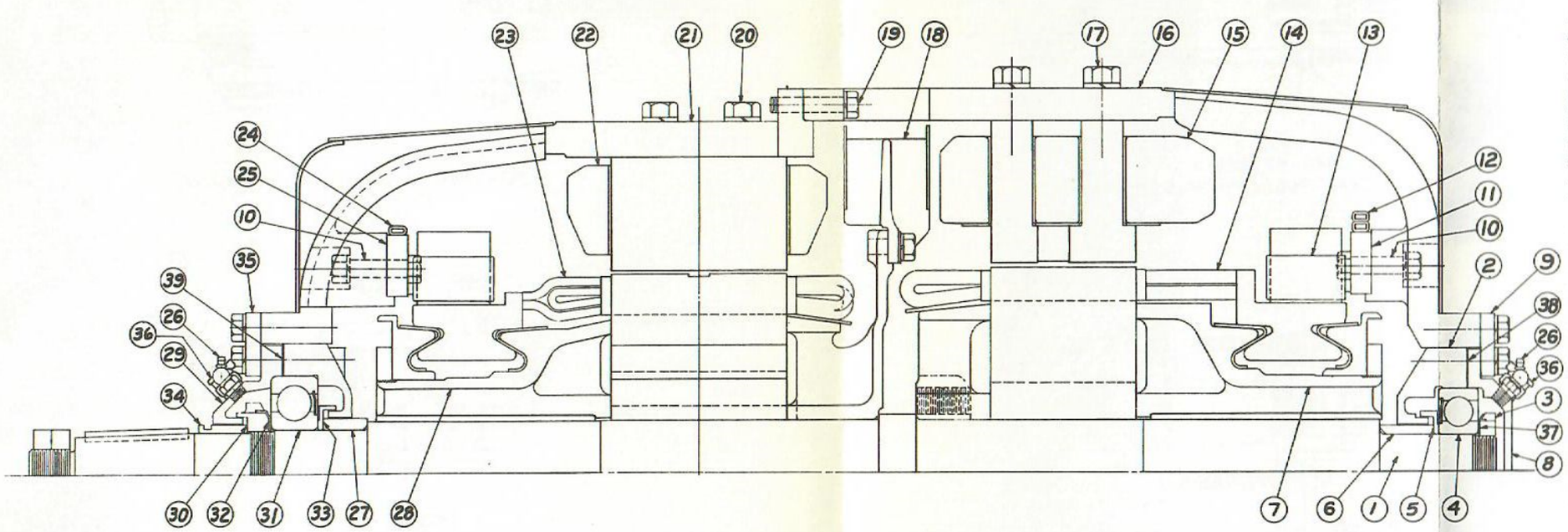

39 GASKET (AUX. GEN.)
38 GASKET (EXC.)
37 LOCKWASHER (EXC.)
36 OVERFLOW FITTING
35 END PLATE (AUX. GEN.)
34 COLLAR (AUX. GEN.)
33 FLINGER INNER (AUX. GEN.)
32 LOCKWASHER
31 BEARING (AUX. GEN.)
30 BEARING NUT (AUX. GEN.)
29 BEARING CAP (AUX. GEN.)
28 COMMUTATOR (AUX. GEN.)
27 SPACING COLLAR (AUX. GEN.)
26 GREASE FITTING
25 BRUSH HOLDER SUPPORT (AUX. GEN.)
24 BRUSH HOLDER BUS RINGS (AUX. GEN.)
23 ARMATURE WINDING (AUX. GEN.)
22 FIELD COILS (AUX. GEN.)
21 MAGNET FRAME (AUX. GEN.)
20 POLE PIECE BOLTS
19 JOINT BOLTS
18 FAN
17 POLE PIECE BOLTS (EXC.)
16 MAGNET FRAME (EXC.)
15 FIELD COILS (EXC.)
14 ARMATURE WINDING (EXC.)
13 BRUSH HOLDER
12 BRUSH HOLDER BUS RINGS (EXC.)
11 BRUSH HOLDER SUPPORT (EXC.)
10 BRUSH HOLDER SUPPORT BOLT
9 END PLATE (EXC.)
8 BEARING CAP
7 COMMUTATOR (EXC.)
6 SPACING COLLAR (EXC.)
5 FLINGER INNER (EXC.)
4 BEARING (EXC.)
3 BEARING NUT (EXC.)
2 BEARING HOUSING (EXC.)
1 SHAFT

Fig. 1-11
Longitudinal section of GMG-139 exciter-auxiliary generator set.

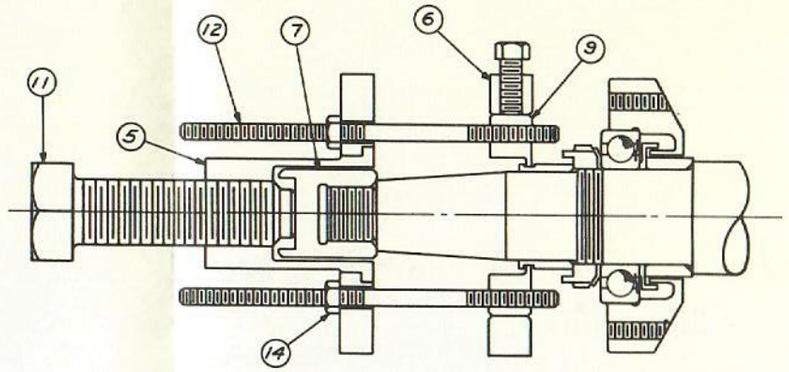

FIG. 1
CAT. 4748991G2
SLEEVE PULLER (AUX. GEN. END)

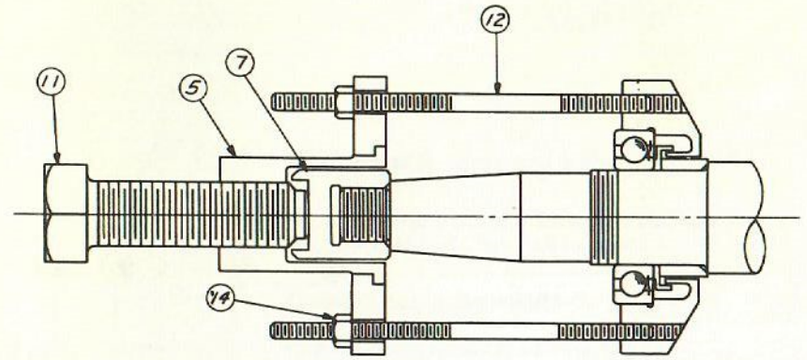

FIG. 2
CAT. 4748991G3
BEARING PULLER (AUX. GEN. END)

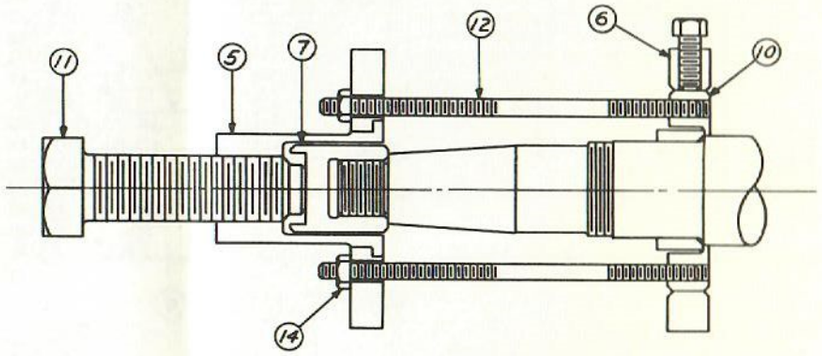

FIG. 3
CAT. 4748991G4
SLEEVE PULLER (AUX. GEN. END)

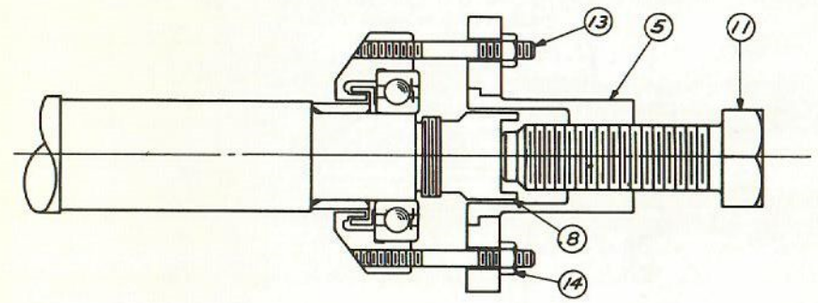

FIG. 4
CAT. 4748991G5
BEARING PULLER (EXC. END)

4	4	4	4	4	C2L7	STEEL		14	NUT HEX. 5/8-16
4				4		PT. 1	V-6717165	13	STUD
	4	4	4	4		PT. 1	V-6717164	12	STUD
1	1	1	1	1		PT. 1	V-8805442	11	BOLT
	2			2		PT. 2	K-8828751	10	CLAMP
			2	2		PT. 2	K-8828750	9	CLAMP
1				1		PT. 1	V-8806868	8	PRESSURE CAP
	1	1	1	1		PT. 1	V-8806867	7	PRESSURE CAP
	1		1	1		G-1	K-8828749	6	RING
1	1	1	1	1		G-1	M-8837093	5	CLAMPING PLATE
X								4	ASSEMBLY FIG. 4
	X							3	ASSEMBLY FIG. 3
		X						2	ASSEMBLY FIG. 2
			X					1	ASSEMBLY FIG. 1
CAT. 4748991G5	CAT. 4748991G4	CAT. 4748991G3	CAT. 4748991G2	CAT. 4748991G1	GROUP DESCR.			G. NO.	
G-5	G-4	G-3	G-2	G-1					

CAT. 4748991G1 COVERS ALL PARTS IN SUFFICIENT QUANTITY TO MAKE UP ASSEMBLIES IN FIGURES 1 THRU 4 WITHOUT DUPLICATION OF PARTS

Fig. 2-11
Puller tools for GMG-139 set.

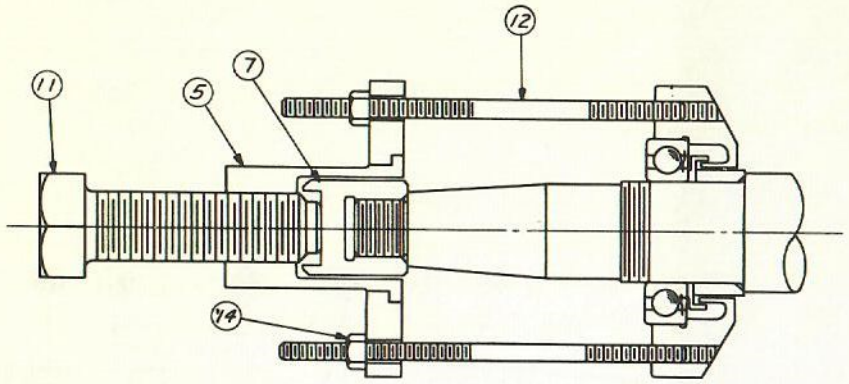

FIG. 2
CAT. 4748991 G3
BEARING PULLER (AUX. GEN. END)

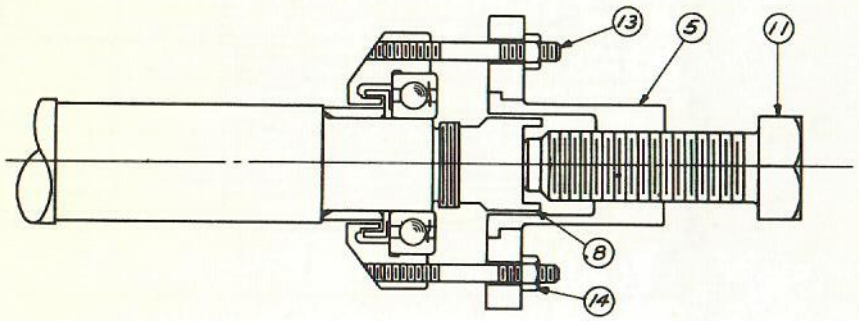

FIG. 4
CAT. 4748991 G5
BEARING PULLER (EXC. END)

4	4	4	4	4	C2L7	STEEL		14	NUT HEX. ⅜-16
4				4		PT. 1	V-6717165	13	STUD
	4	4	4	4		PT. 1	V-6717164	12	STUD
1	1	1	1	1		PT. 1	V-8805442	11	BOLT
	2			2		PT. 2	K-8828751	10	CLAMP
			2	2		PT. 2	K-8828750	9	CLAMP
1				1		PT. 1	V-8806868	8	PRESSURE CAP
	1	1	1	1		PT. 1	V-8806867	7	PRESSURE CAP
	1		1	1		G-1	K-8828749	6	RING
1	1	1	1	1		G-1	M-8837093	5	CLAMPING PLATE
X								4	ASSEMBLY FIG. 4
	X							3	ASSEMBLY FIG. 3
		X						2	ASSEMBLY FIG. 2
			X					1	ASSEMBLY FIG. 1
G-5	G-4	G-3	G-2	G-1					G. NO.
CAT. 4748991 G5	CAT. 4748991 G4	CAT. 4748991 G3	CAT. 4748991 G2	CAT. 4748991 G1					GROUP DESCR.

PARTS IN
MAKE UP
THRU 4
PARTS

139 set.

5. Place wooden block under auxiliary-generator frame.

6. Take out inner row of bolts through end plate at exciter end.

7. Screw ejection bolts in tapped holes provided in end plate. Evenly draw up on ejection bolts to remove exciter magnet frame from armature; bearing will remain in generator frame.

8. Take up weight of armature with a rope sling around the fan.

9. In a similar manner, remove inner row of bolts through end plate on generator end, apply ejection bolts in tapped holes in plate and remove generator magnet frame from armature. See items 6 and 7.

REMOVE EXCITER-END BEARING

1. Remove two countersunk-head screws which hold bearing cap to housing; take off bearing cap.

2. Straighten lock washer and remove bearing nut.

3. Using suitable puller, Cat. 4748991G5, pull off the housing, flinger and ball bearing. See Fig. 2-11.

4. To remove bearing from housing, place a wood block against the flinger and tap it lightly with a mallet.

REMOVE GENERATOR-END BEARING

1. Remove pulley key from shaft.

2. Remove two countersunk-head screws which hold bearing cap to housing; take off bearing cap.

3. Using a puller which engages the annular groove, Cat. 4748991G2, pull the collar off shaft. See Fig. 2-11.

4. Straighten lock washer and remove bearing nut.

5. Using suitable puller, Cat. 4748991G3, pull housing, flinger and ball bearing from shaft. Do not damage gasket.

6. To remove bearing from housing, place a wood block against flinger and tap it lightly with a mallet.

7. Before removing commutator or armature from shaft, pull off the spacing collar, using puller Cat. 4748991G4.

REMOVE BRUSH HOLDERS

1. Remove magnet frame from armature.

2. Disconnect two leads from bus rings.

3. Take out support bolts through end of frame and remove complete brush-holder assembly. Do not remove bus rings from support unless complete disassembly is desired.

4. Remove individual brush holders from support by taking out the capscrews. Note that brush holders are mounted on support to provide a three-degree trailing angle for brush; all brush holders are the same but supports are different, and are not interchangeable. On removal from frame, mark each support so it can be reassembled in same magnet frame.

5. On overhaul, clean the fiber support with a cleaning solvent and apply a good brushing of Glyptal No. 1201 red enamel. Inspect brush-holder parts and replace them if defective.

REMOVE FIELD COILS

1. Remove frame assembly from armature.

2. Disconnect leads to coil.

3. Take out pole-piece bolts and slide coil out through fan end of frame. Be sure to retain shims with each pole for reassembly in exactly same position as removed.

See Fig. 3-11 for cross-section of exciting coil of exciter end. Exciter characteristics are determined by the shims under each pole of the exciting coil; replace them exactly as removed.

REMOVE FAN

1. Remove exciter magnet frame from armature.

2. Take out bolts which secure the one-piece fan to machined flange on generator armature head.

3. Mark fan and armature head, so fan can be reassembled in same radial location, to avoid changing the balance of armature.

4. Slide fan off over exciter armature.

REMOVE EXCITER ARMATURE FROM SHAFT

1. Remove exciter magnet-frame assembly from armature.

2. Remove exciter-end bearing from shaft.

3. Install armature puller, Cat. 6746764G1, by screwing studs through air ducts in armature and into tapped holes in fan-end armature head. Pull assembled core and commutator off shaft. See Fig. 4-11.

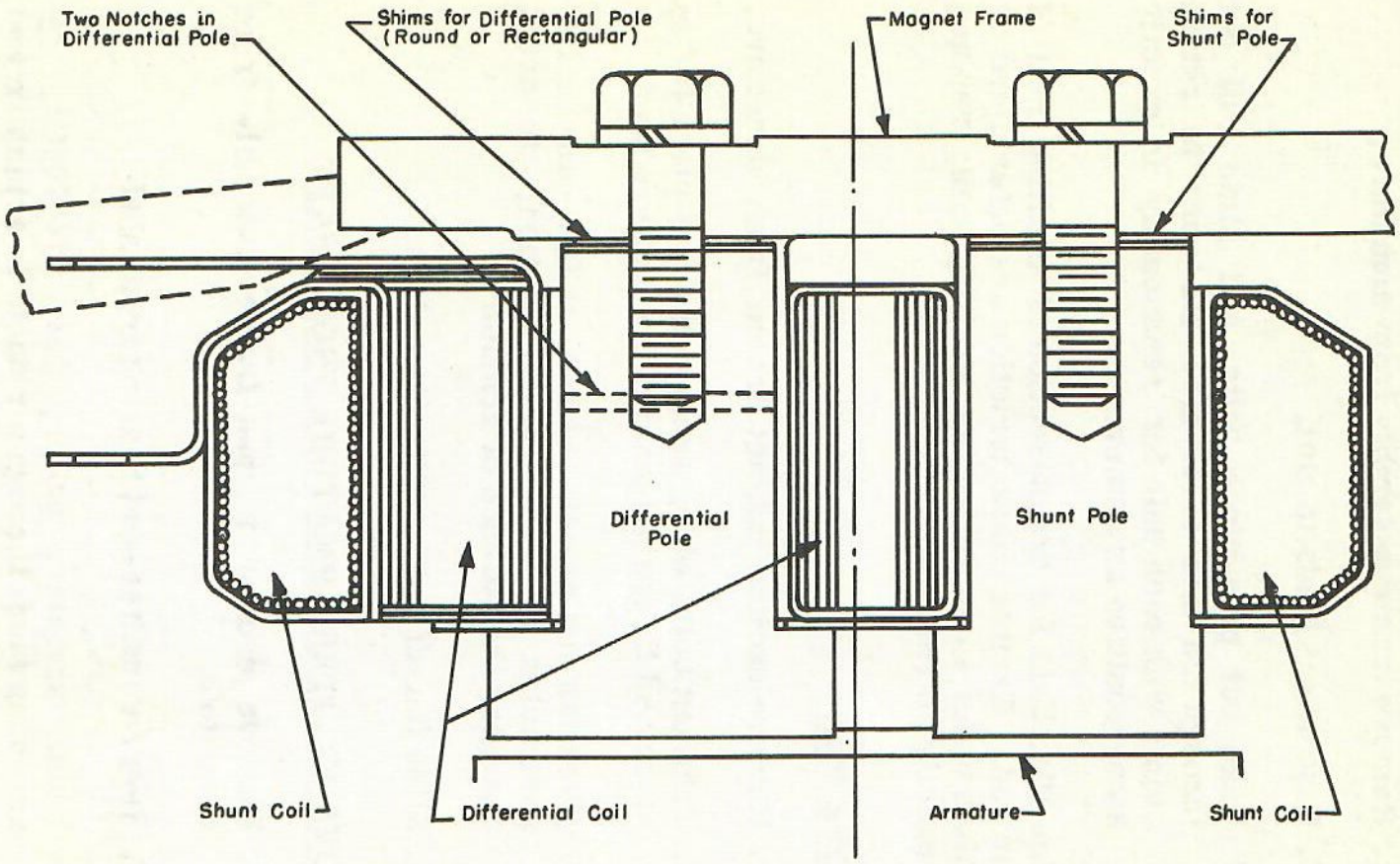

Fig. 3-11
Section through exciting field coil and pole piece, with shunt and differential winding.

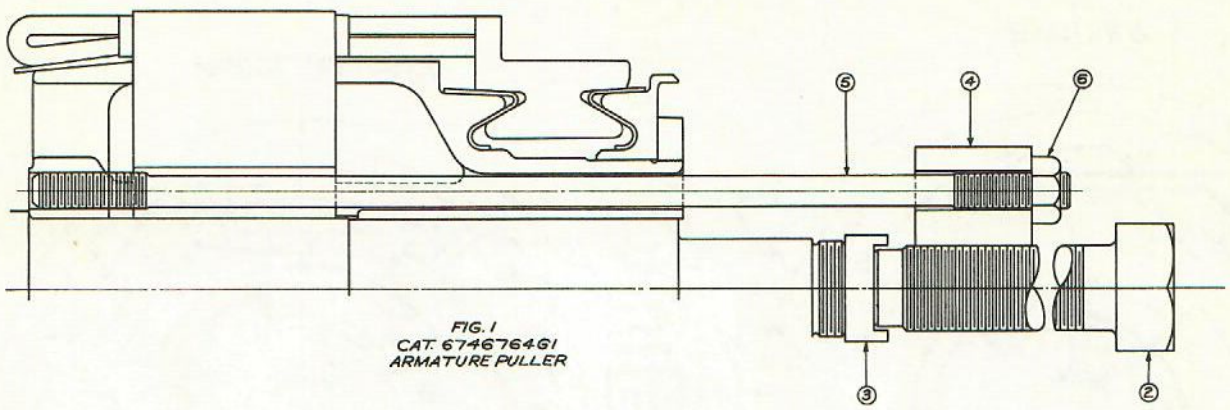

6	C2L7	STEEL		6	NUT HEX. 5/8-11
6		PT. 1	V-8811118	5	STUD
1		PT. 1	V-8864062	4	CLAMPING PLATE
1		PT. 1	V-8806326	3	PRESSURE CAP
1		PT. 1	V-8806680	2	BOLT
X				1	ASSEMBLY FIG. 1

CAT. 6746764G1 -G1
GROUP SERIES G. NO.

Fig. 4-11
Puller for removing exciter armature from shaft.

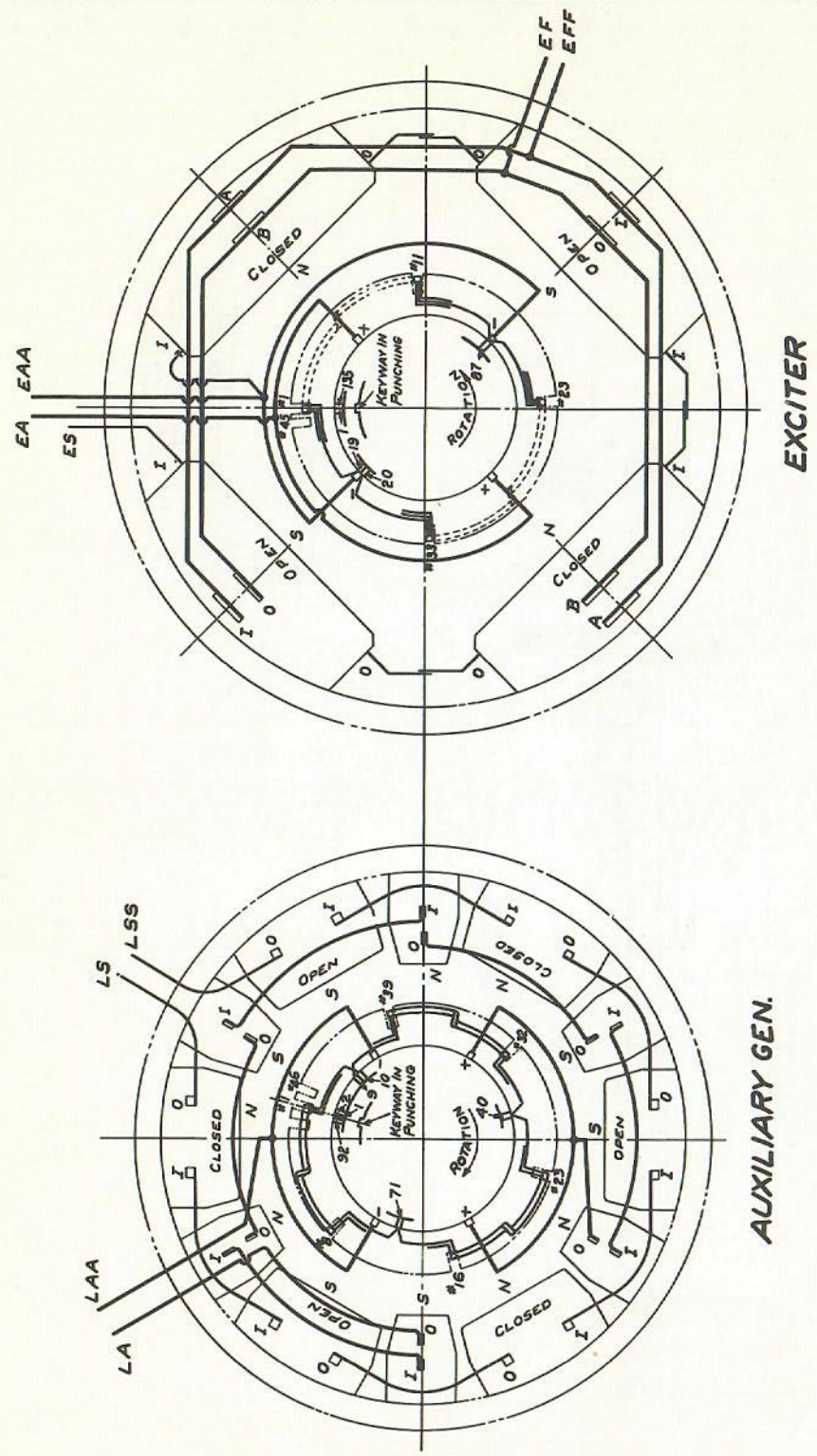

Fig. 5-11
Connection diagram for GMG-139 exciter-auxiliary generator set.

ASSEMBLY OF SET

ASSEMBLE FAN

1. Clean rabbet fit on armature head to remove varnish or dirt.

2. Install fan over exciter armature and on rabbet fit on generator armature head. Rotate fan to align marks made before removal to avoid disturbance of armature balance.

3. Assemble fan bolts with lock washers and tighten.

ASSEMBLE FIELD COILS

1. Install coil and pole assembly in frame and secure with pole-piece bolts and new lock washers. Note that exciting coils are open and closed type, assembled alternately in frame. Be sure to assemble in accordance with Connection Diagram (see Fig. 5-11). Install shims exactly as removed.

2. Connect leads to coil terminals and tighten connections.

ASSEMBLE BRUSH HOLDERS

1. Assemble brush holders on support so brushes are trailing on commutator. Brush holders in both machines are the same, but supports are different.

2. Assemble bus rings on support and connect them to brush holders.

3. Lock bolts which secure brush holders by bending up corners of lock washers.

4. Install support with brush holders into frame, over frame fit, and bolt securely.

5. After armature has been installed, check clearance between commutator and face of brush holder; in a new machine, clearance is 1/16 inch and maximum permissible for worn commutator is 3/16 inch.

ASSEMBLE GENERATOR-END BEARING

Refer to Fig. 1-11.

1. Heat spacing collar to 150 C (302 F) and place it on shaft, tight against shoulder.

2. Place flinger in bearing housing and assemble ball bearing with grease-seal plate to inside. If necessary, heat housing to 100 C to facilitate assembly.

3. Heat assembled housing and bearing to 110 C (230 F) and, while hot, place it on shaft so flinger and bearings are tight against spacing collar.

4. Assemble lock washer and shaft nut; tighten nut and lock.

5. Heat collar to 150 C (302 F) and shrink it on shaft tight against the nut. Assemble with annular groove to outside.

6. Measure out 2 1/2 ounces of G-E ball-bearing grease, Type D6A2A3, and pack it around balls and over shaft nut.

7. Assemble bearing cap with gasket and secure it to bearing housing with two countersunk-head machine screws.

8. Rotate bearing housing on shaft to be sure it turns freely with no binding in bearing.

ASSEMBLE EXCITER-END BEARING

Refer to Fig. 1-11.

1. Place flinger in bearing housing and assemble ball bearing with grease-seal plate to inside. If necessary, heat housing to 100 C to facilitate assembly.

2. Heat assembled housing and bearing to 110 C (230 F) and, while hot, place it on shaft so flinger and bearings are tight against the spacing collar.

3. Assemble lock washer and shaft nut; tighten nut and lock it.

4. Measure out 2 1/4 ounces of G-E ball-bearing grease, Type D6A2A3, and pack it around the balls and over shaft nut.

5. With gasket in place, assemble bearing cap to housing and secure it with two countersunk-head machine screws.

6. Rotate bearing housing on shaft to be sure it turns freely with no binding in bearing.

ASSEMBLE ARMATURE IN FRAME

Refer to Fig. 1-11.

1. Block up auxiliary-generator frame assembly on bench.

2. Place a rope sling around fan on armature and lift armature.

3. Ease generator end of armature into frame until bearing housing just starts into frame fit. Insert capscrews through end plate into housing; draw up on capscrews to pull armature into place until bearing cap is tight against end plate.

4. Assemble exciter frame over armature in similar manner. Insert capscrews through end plate and draw bearing housing into frame fit. Engage exciter frame in rabbet fit on generator frame and pull it into place with joint bolts. Pull two frames together and tighten exciter bearing housing to end plate.

5. Rotate armature to be sure it turns freely in bearings.

6. Assemble grease fittings and overflow fittings in each bearing cap.

7. Check brush-holder clearance to commutator and install a good set of brushes.

8. If available, assemble shaft key and pulley.

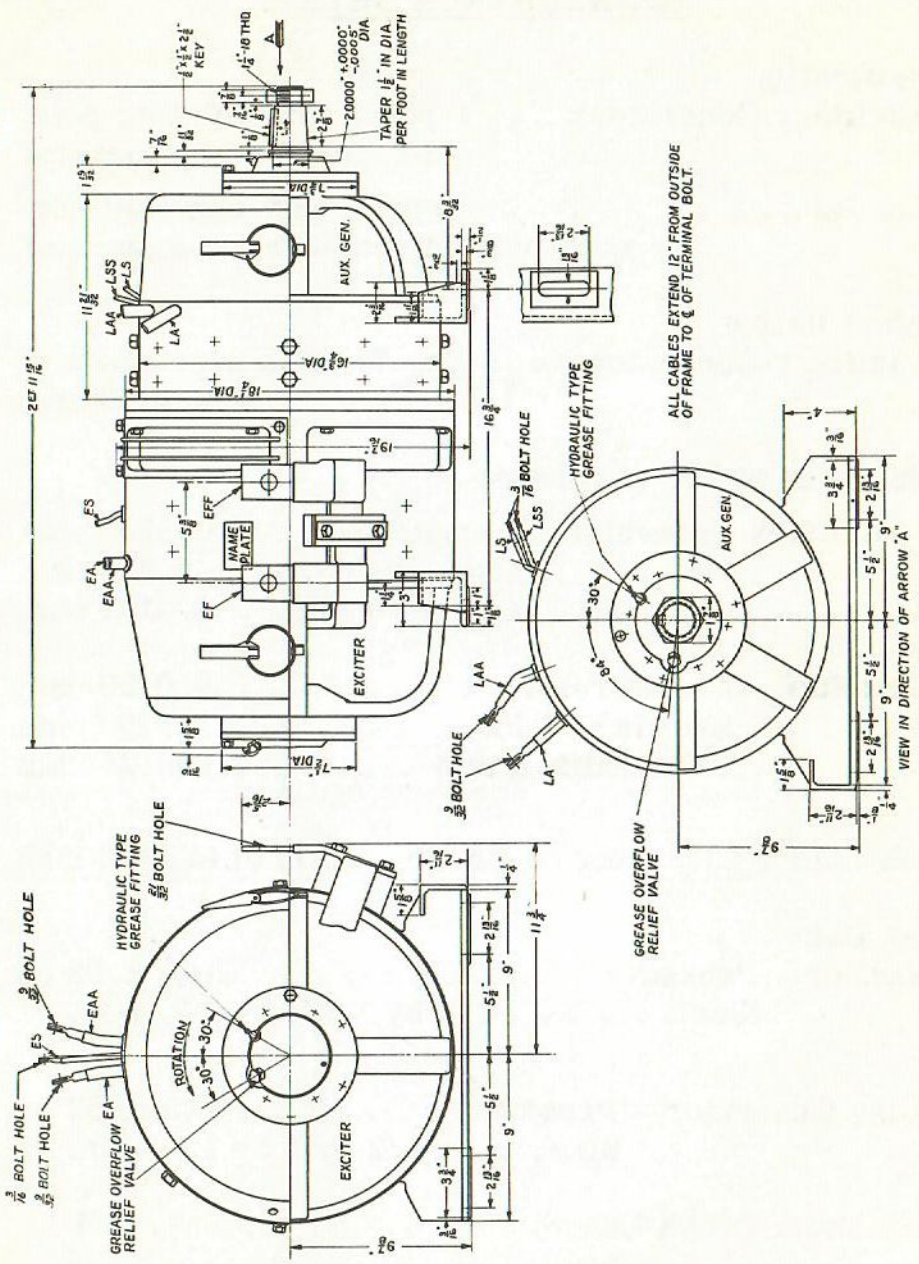

Fig. 6-11
Outline dimensions of GMG-139 exciter-auxiliary generator set.

EXCITER-AUXILIARY GENERATOR SET
Model 5GMG144A1

MAINTENANCE DATA

Classification
Auxiliary Generator . . . 4-pole, commutating-pole, direct-current generator

Exciter. . . . . 4-pole, non-commutating, split-pole, direct-current generator

Nominal Rating
Auxiliary Generator . . 8 kw, 75 volts over range of 650/1760 rpm

Resistances at 25C (Average)

Auxiliary Generator - Armature. . . . 0.0500 ohm
Exc. Field . . . 9.210 ohm
Comm. Field. . 0.0197 ohm

Exciter - Armature. . . . . 0.0450 ohm
Exciting Field . . . . . 3.750 ohm
Differential Field . . . . . 0.000125 ohm

Brush-holder Clearance to Comm. . . 1/16 to 3/32 inch

Brush Data
Exciter - Pressure . . . . . 46 to 52 oz
Size . . . . . 1/2 by 1 3/4 by 1 3/4-in. lg

Aux. Generator - Pressure . . . . . 43 to 53 oz
Size. . . . 1/2 by 1 by 1 3/4-in. lg

Minimum Brush Length . . . . . 3/4 in.

Nominal Air Gap
Auxiliary Generator - Exc. Poles . . . . . 0.050 in.
Comm. Poles . . . . 0.148 in.

Exciter Poles . . . . . 0.100 in.

Commutator Side Mica
Thickness - Exciter End . . . . . 0.020 in.
Aux. Generator . . . . . 0.020 in.
Grooving Depth . . . . . 3/64 in.

Commutator Diameter
New Commutator . . . . . 8 in.
Minimum Permissible . . . . . 7 1/2 in.

Bearing Grease Capacity (2/3 Full)
Shaft Extension End . . . . . 2 1/4 oz
End Opposite Extension . . . . . 2 1/4 oz

Weights
Complete Set . . . . . 905 lb
Armature Only . . . . . 335 lb

LUBRICATION

At overhaul, disassemble bearings from shaft, thoroughly clean to remove old grease and dirt, inspect parts for wear or defects, and on reassembly, repack bearings with G-E ball-bearing grease, Type D6A2A3.

DISASSEMBLY OF SET

Refer to Fig. 7-11 and Fig. 2-11.

REMOVE ARMATURE FROM FRAMES

Same instructions as for GMG-139 set.

REMOVE EXCITER-END BEARING

Same instructions as for GMG-139 set.

REMOVE GENERATOR-END BEARING

Same instructions as for GMG-139 set except omit item 4; there is no shaft nut on generator end of armature.

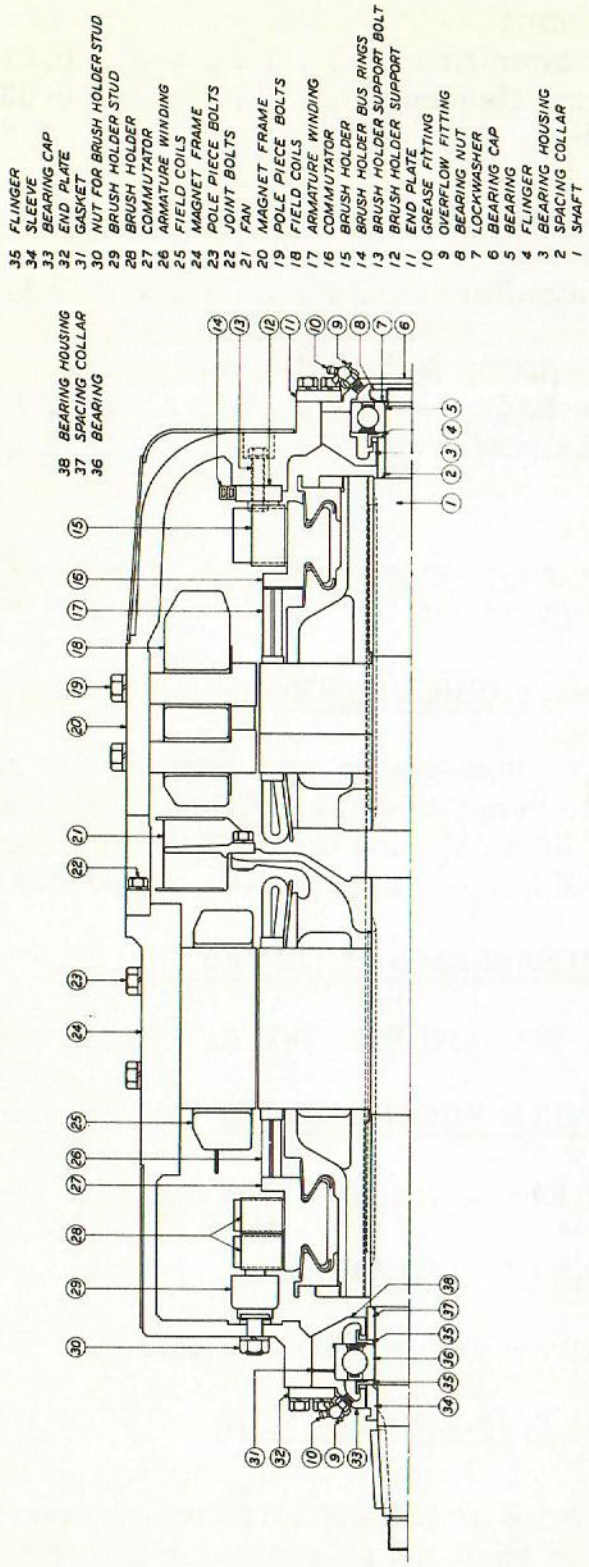

Fig. 7-11
Longitudinal section of GMG-144 exciter-auxiliary generator set.

REMOVE BRUSH HOLDERS

Exciter End

Same instructions as for GMG-139 set.

Auxiliary-Generator End

Brush holders are mounted, two to a support, on individual mycalex-insulated studs which are secured to end of frame.

1. Disconnect cable lead from brush-holder terminal strip.
2. Take off nut and lock washer from end of stud outside magnet frame.
3. Lift complete stud and brush-holder assembly out of frame.
4. To remove an individual brush holder, loosen clamp bolt and slide brush holder off stud.

REMOVE FIELD COILS

Same instructions as for GMG-139 set.

REMOVE FAN

Same instructions as for GMG-139 set.

REMOVE EXCITER ARMATURE FROM SHAFT

Same instructions as for GMG-139 set.

ASSEMBLY OF SET

Refer to Fig. 7-11.

ASSEMBLE FAN

Same instructions as for GMG-139 set.

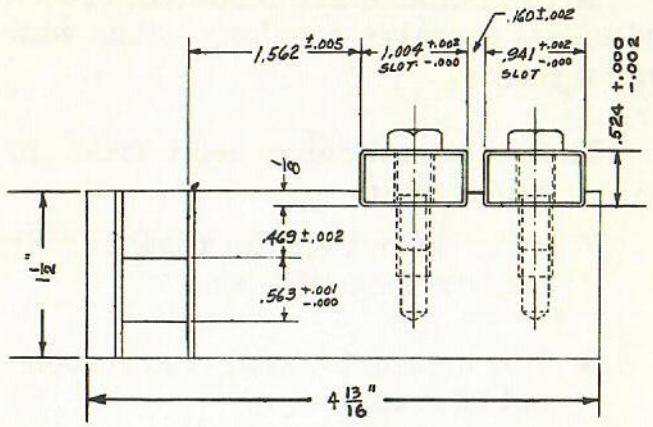

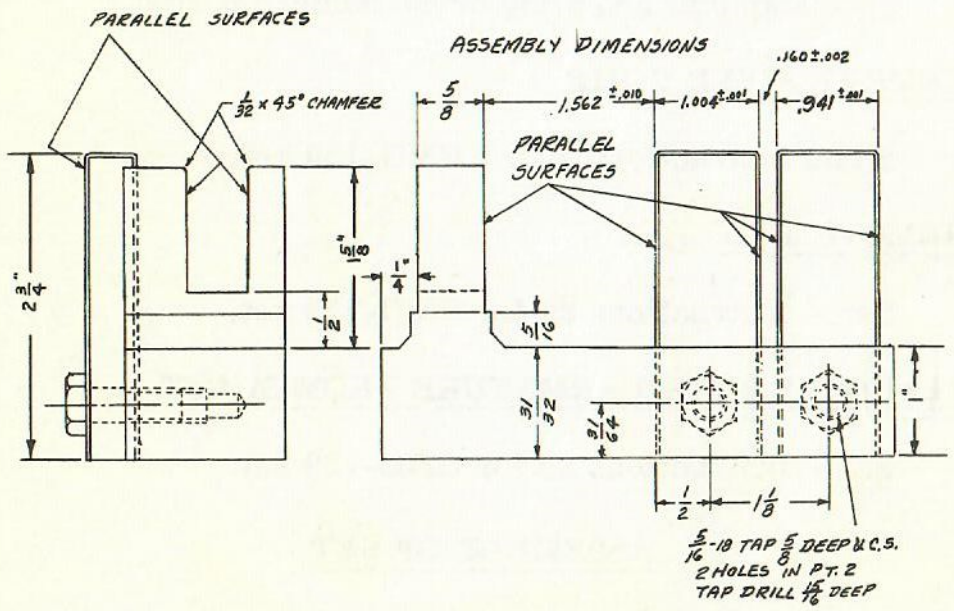

Fig. 8-11
Fixture for assembling brush holders on insulated stud.

ASSEMBLE FIELD COILS

Same instructions as for GMG-139 set.

ASSEMBLE BRUSH HOLDERS

Exciter End

Same instructions as for GMG-139 set.

Generator End

To obtain desired generator characteristics, brush holders must be correctly aligned and properly located on commutator. Use assembly fixture M-8837913-G1; see Fig. 8-11.

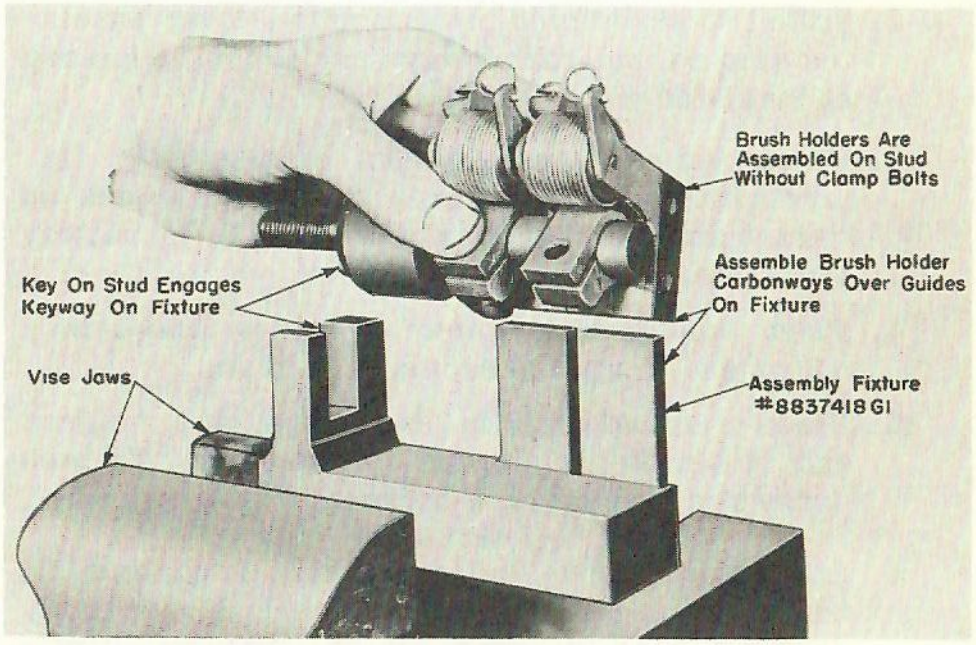

Fig. 9-11
Clamp fixture in vise and assemble stud and brush holders.

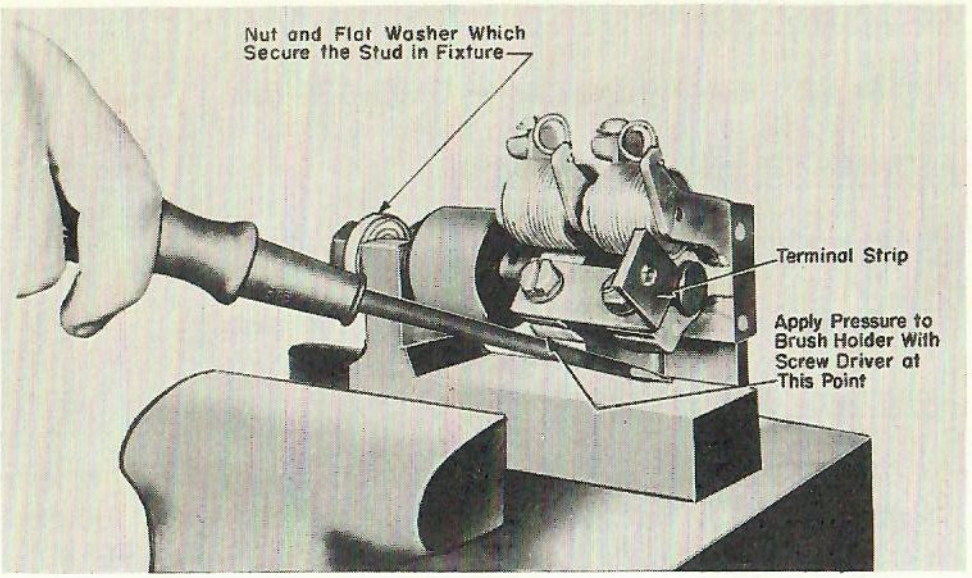

Fig. 10-11
Method of removing assembled stud and brush holders from line-up fixture.

1. Clamp assembly fixture in a vise. See Fig. 9-11.

2. Slide two assembled brush holders over insulated stud so that carbonways are to left, looking at insulated end of stud.

3. Place stud and brush holders on assembly fixture with carbonways over hardened guides on fixture and with keyed section of stud in keyway of fixture.

4. Press stud down to bottom of keyway and tighten nut on end of stud to secure it in place.

5. Place terminal strip in place on brush holders and assemble clamping capscrews. Tighten screws to clamp brush holders to stud.

6. Loosen or remove nut from end of stud and lift complete assembly from fixture. If assembly does not readily come off the fixture, gently pry between base of fixture and clamping lug with a screw driver. See Fig. 10-11. Do not damage carbonways or mycalex insulation on stud.

7. Install assembly in frame with key on stud in keyway on frame. Secure it with lock washer and nut. Tighten nut.

8. Connect proper cable lead to brush-holder terminal strip.

ASSEMBLE GENERATOR-END BEARING

Same instructions as for GMG-139 set except for item 4; assemble flinger tight against inner bearing race (no shaft nut is required). Pack bearing with 2 1/4 ounces of G-E ball-bearing grease, Type D6A2A3.

ASSEMBLE EXCITER-END BEARING

Same instructions as for GMG-139 set.

ASSEMBLE ARMATURE IN FRAMES

Same instructions as for GMG-139 set.

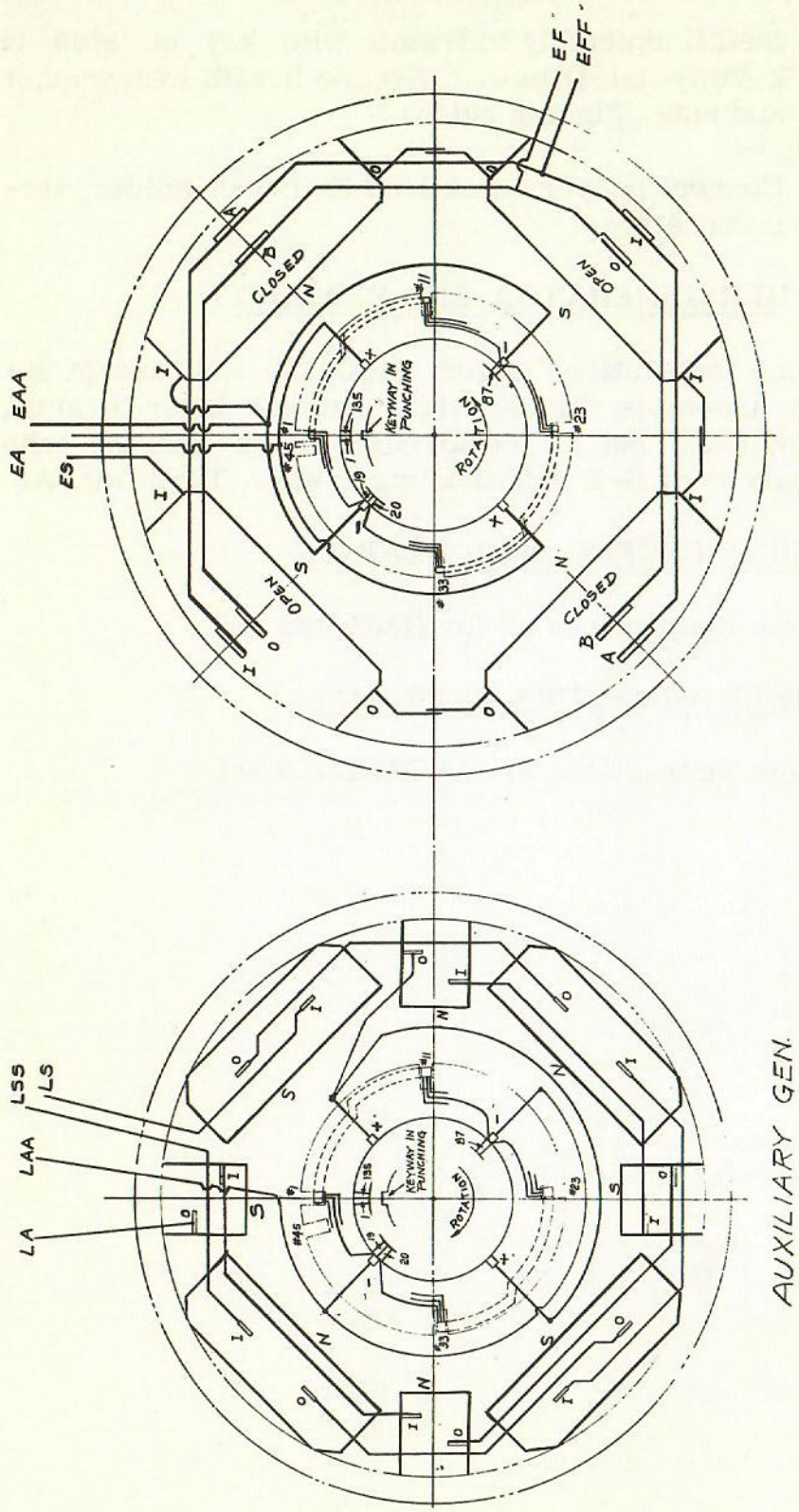

Fig. 11-11
Connection diagram for GMG-144 exciter-auxiliary generator set.

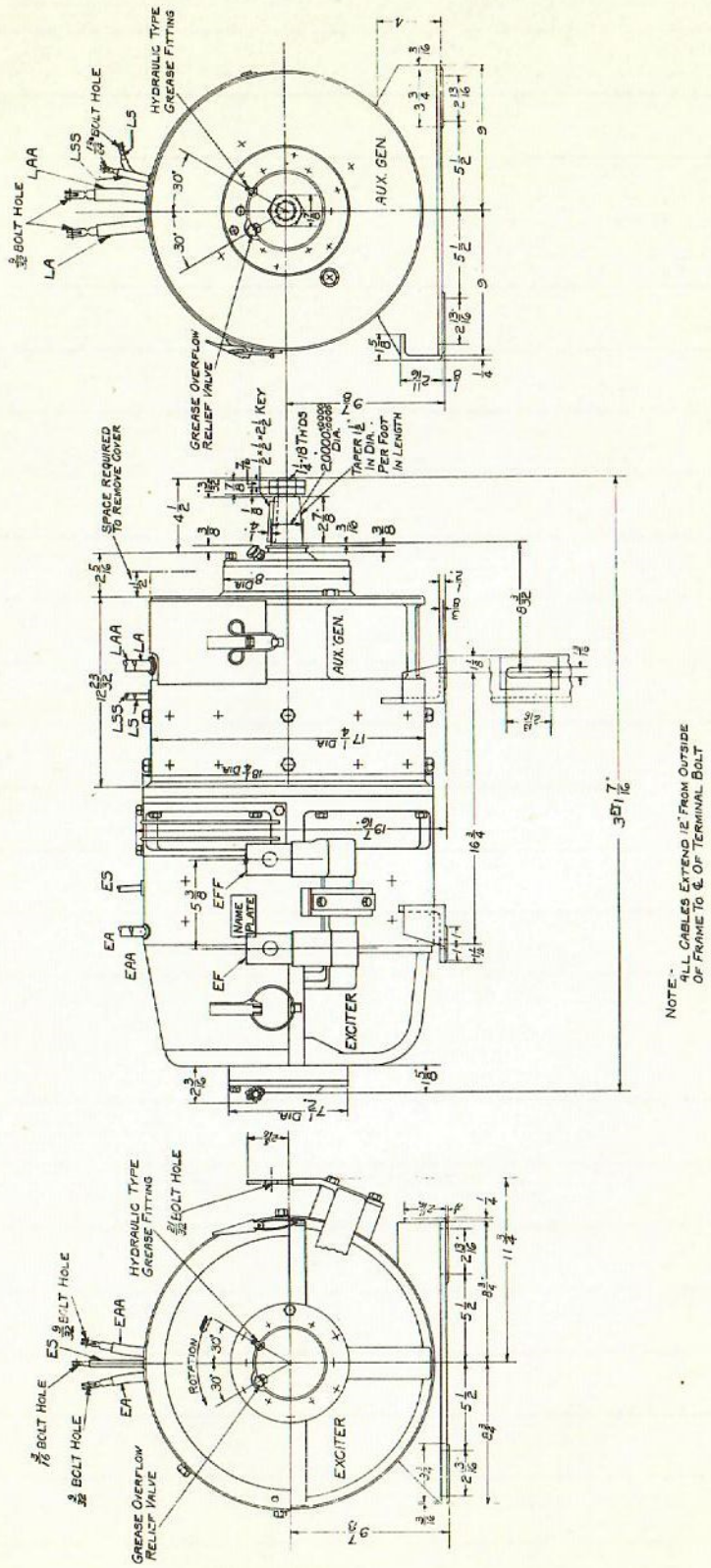

Fig. 12-11
Outline dimensions of GMG-144 exciter-auxiliary generator set.

NOTES

RADIATOR-FAN GEAR UNIT

Models 7GA14A1 7GA14C1 7GA15A1
7GA14A2 7GA14C2 7GA15A2
7GA14A3 7GA14D1 7GA15B1
7GA14B1 7GA14E1

MAINTENANCE DATA

Oil capacity of gear box . . . . . Approx. 2 3/4 pints

Grease Capacity:
- Horizontal Shaft Bearings . . . . . 6 oz
- Top Vertical Shaft Bearings . . . . . 2 1/2 oz

End Play - Horizontal Shaft - New . . 0.003 to 0.005 in.
Worn Limit . . 0.010 in.

Back Lash of Gears:
- With New Gears . . . . . 0.006 to 0.009 in.
- Max. Permissible Due to Worn Gears . . 0.025 in.

Gear Ratio . . . . . 1 to 1

Weight
- Complete Gear Box . . . . . 145 lb

Original gear units had gears keyed to shafts as indicated on longitudinal section drawings. Later these keys were removed to provide added shaft strength and gears assembled with a shrink fit only. All subsequent units were produced without keys, so both styles are in service.

In Models 7GA14A3 and 7GA15A2 the bottom bearing on vertical shaft has rollers on inner bearing race; in other models the rollers are on outer race.

LUBRICATION

BEARINGS

Both horizontal shaft bearings and upper bearing on vertical shaft are grease lubricated through fittings; one fitting supplies grease to both horizontal shaft bearings. Use G-E ball-bearing grease, Type D6A2A3.

At overhaul, clean bearing parts to remove old grease and dirt and, on reassembly, repack bearings with G-E ball-bearing grease, Type D6A2A3.

GEARING

Gearing and bottom bearing on vertical shaft are lubricated by dip and splash from oil in bottom of gear box.

Maintain oil level in gear box within 1/4 inch of top of top opening in Tee fitting located at base of gear box. Inspection periods must be frequent enough to insure that oil level does not fall below this point. Oil level must never be above top of Tee fitting.

Where it is more convenient to add oil through filler plug on end wall of gear unit, **REMOVE PIPE PLUG FROM TOP OF TEE FITTING** before adding oil, to prevent overfilling the box. Replace both pipe plugs after filling.

Drain and flush gear box annually and refill with new oil.

Use a good grade of straight mineral oil, SAE-40, in gear box.

INSPECTION

At annual inspection, check back lash of gearing and end play of horizontal shaft. If back lash, due to gear box only, exceeds 0.025 inch when measured three inches from centerline of vertical shaft (0.1875 inch measured at tip of 45-inch fan), the gears are worn beyond safe limits, and gear box should be overhauled.

OVERHAUL

Every two to three years, overhaul gear unit, as follows:

1. Remove aphonic fan from gear unit, using a suitable puller. Do not use a sledge or otherwise pound on end of vertical shaft. If fan hub

sticks or is rusted to the shaft, apply heat uniformly around the hub. To pull 45-inch fan, use puller, Cat. 6756397G8.

2. Before disassembling gear box, check back lash as follows: See Fig. 6-12.

   Lock horizontal shaft against inner bearing race, mount dial indicator on box and measure back lash of vertical shaft at a point three inches from centerline of shaft. If back lash exceeds 0.025 inch, install a new set of gears. In an emergency, the old gears may be reassembled, but back lash should be adjusted to same value as measured above; since this is the limit for safe operation, it is more economical to replace gears at this time.

3. Disassemble gear box for inspection of parts.

4. Clean all parts with kerosene or other petroleum cleaner.

5. Examine gears for wear. If any noticeable shoulder is worn near base of teeth, replace the gears. Always replace both gears of the set at same time. In case old gears are reassembled, adjust back lash so it remains the same as before disassembly; this will maintain the original gear-tooth marking and avoid failure due to teeth dropping off the shoulder worn near base of teeth.

6. Inspect roller bearings for defective rollers, rotating each roller. Inspect cages and raceways for defects or excessive wear. Spin ball bearings and listen for defects. Examine outer races for visible evidence of a track worn by rollers, as indicated by a slight shoulder in the track. If there is a visible track worn in the race, replace the complete bearing.

7. After cleaning and inspection, if bearing is to be used again, dip it in a light grade of mineral oil (SAE-10) heated to 100 C, to protect the polished

surfaces and prevent corrosion. Wrap up bearings in oiled paper to keep out dirt until they are reassembled.

8. Drain and flush out oil reservoir of gear-box housing. When it is clean and dry, apply Glyptal No. 1201 red enamel to oil reservoir and air dry. Keep enamel off bearing fits.

9. When assembling gear box with old bearings and gears, use the same shims to maintain same end play and back lash as measured before disassembly. When new bearings and gears are installed, adjust end play and back lash to values given for new gear box.

10. To assemble 45-inch fan when fit is tight on vertical shaft, heat fan to 70 to 90 C; to assemble it cold, use tool, Cat. 6734520G1 to force fan hub on shaft.

DISASSEMBLY OF GEAR UNIT

Refer to Fig. 1-12 and Fig. 2-12.

1. Remove capscrews holding vertical-shaft bearing cap to gear box.

2. Use tapped ejection holes on same bolt circle to assist in lifting out assembly of vertical shaft, complete with ball bearings, bearing housing, bearing cap, flinger, collar and gear. Keep shim pack intact for reassembly.

3. Take off nut and washer and pull inner race of bottom bearing off shaft, using puller Cat. 6756562G4. See Fig. 2-12.

4. Remove nut and key from vertical shaft. Take out capscrews and remove bearing cap; do not damage gasket between cap and housing.

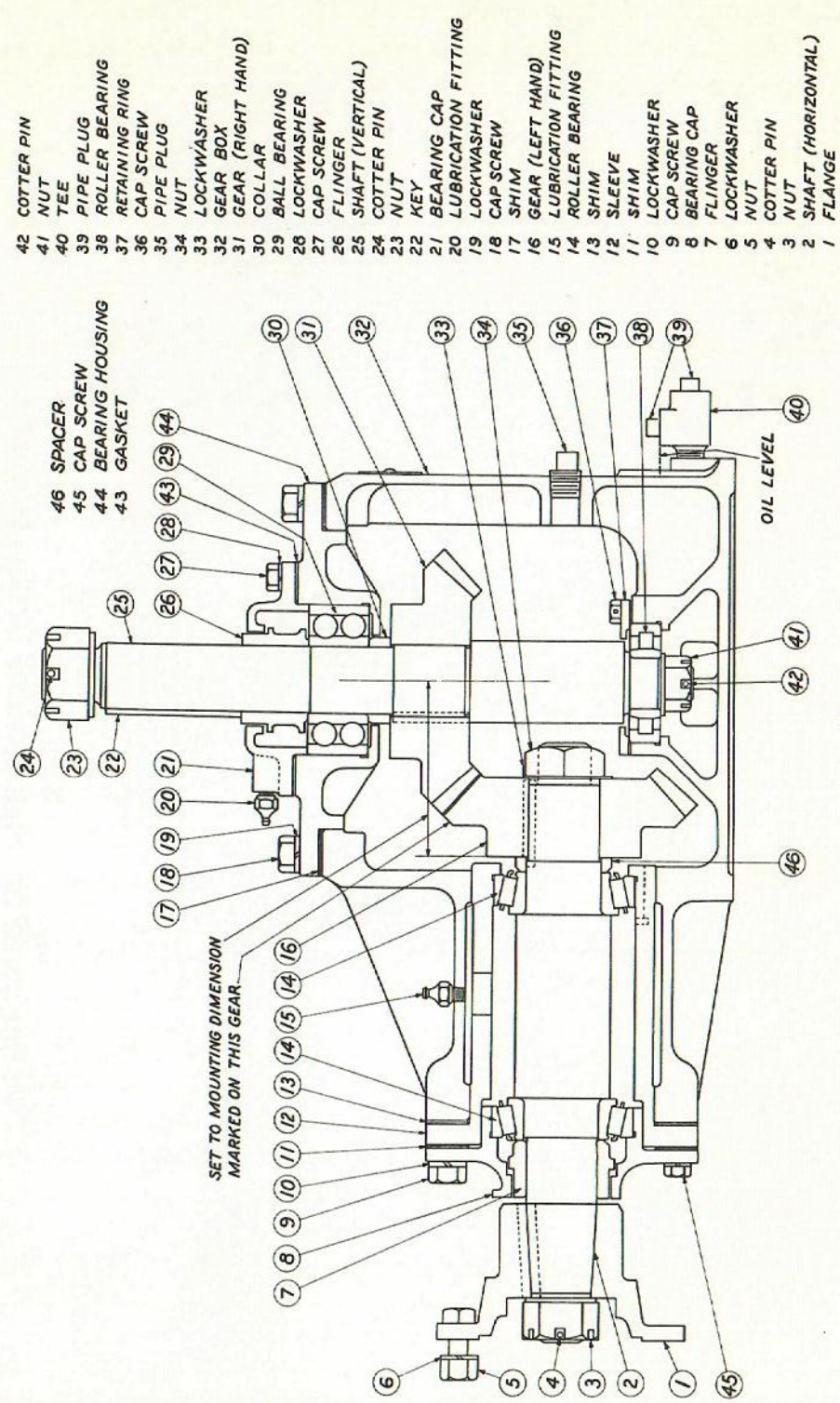

Fig. 1-12
Section view of Type GA-14-A gear unit.

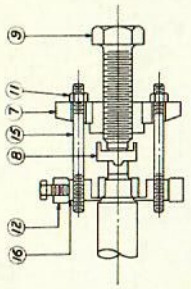

FIG. 3
CAT. 675656264
BEARING PULLER
(VERTICAL SHAFT)

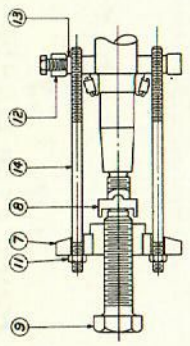

FIG. 2
CAT. 675656263
BEARING PULLER
(HORIZONTAL SHAFT)

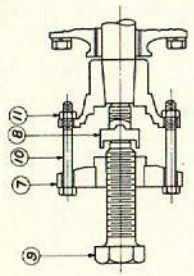

FIG. 1
CAT. 675656262
FLANGE PULLER

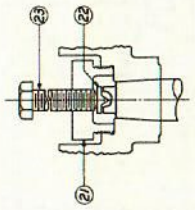

FIG. 6
CAT. 675639768
FAN PULLER

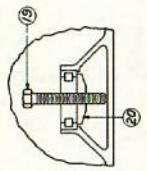

FIG. 5
CAT. 675656266
OUTER BEARING RACE PULLER
(VERTICAL SHAFT)

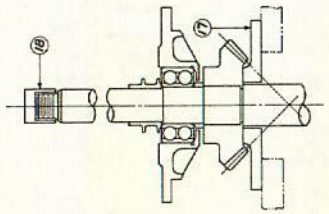

FIG. 4
CAT. 675656265
GEAR & BEARING PULLER
(VERTICAL SHAFT)

| | | |

5. Place vertical-shaft assembly in a press, fan end up, and support it with a plate under the gear. Place pressure cap over end of shaft and press shaft out of gear, collar, bearing with housing and flinger. Use puller Cat. 6756562G5 as shown in Fig. 2-12.

6. Break locking wire and remove capscrews and retaining ring for lower bearing in gear box. Using puller Cat. 6756562G6, pull outer race from gear box. See Fig. 2-12.

7. Remove nut and driving flange or coupling from outer end of horizontal shaft. Take out key in shaft.

8. Remove complete assembly of horizontal shaft with bearings, bearing cap, etc., and at same time remove gear from shaft, as follows:

   a. Remove nut and lock washer from gear end of shaft.

   b. Take out all capscrews at coupling end of gear box. Using two ejection bolts in holes provided, remove bearing cap and shim pack; keep shim pack intact for reassembly.

   c. Place gear box in hydraulic press, supporting it on flanged end of sleeve. See Fig. 3-12. Horizontal shaft will drop down until hub of gear will rest against end of sleeve. Remove pipe plug from large hole in end wall of gear box.

   d. Insert a round bar through pipe-plug hole in box and with end against end of horizontal shaft, press shaft out of the gear. See Fig. 3-12. Protect end of shaft by placing a copper plate between end of bar and end of shaft.

9. Remove gear box from press; insert jackscrews in tapped holes in flange of sleeve, and jack the sleeve from gear box. Keep shim pack intact for reassembly.

10. To pull bearing cones with spacer and flinger from horizontal shaft, use puller Cat. 6756562G3. See Fig. 2-12.

11. To remove bearing cups from bearing cap and sleeve, tap or press them from the fit.

ASSEMBLY OF GEAR UNIT

Refer to Fig. 1-12.

Special tools required:

Measuring fixture, Cat. 6744046G1
Dial indicator with support

If all old parts are reassembled in gear box, replace all shim packs just as they were. If new parts are used, it may be necessary to adjust shims to obtain correct end play and back lash specified for a new unit.

1. Heat sleeve and bearing cap to 100 C and drop bearing cups into place. Be sure cups are tight against shoulders when cold.

2. Heat cones of bearings in oil bath to 100 C and place them on horizontal shaft, tight against shaft shoulder. Check with feelers when cold.

3. Heat gear-end spacer and coupling-end flinger to 120 C and assemble them on shaft; be sure they are tight against bearing cones when cold.

4. Press sleeve into position in gear unit with shim pack EXACTLY THE SAME AS WHEN REMOVED. Make sure that hole in side of sleeve lines up with grease fitting. If old gear is being reassembled, it should not be necessary to change the shim pack; if new gears are mounted, it may be necessary to adjust shim pack to produce correct mounting dimension as marked on new gear.

5. Measure out six ounces of G-E ball-bearing grease, Type D6A2A3, and smear half of it on rollers of each bearing. Assemble shaft with bearings into sleeve.

6. Assemble bearing cap (with bearing cup installed), omitting the shim pack. Draw it into position with several capscrews. By omitting shim pack, all free end play is eliminated for checking mounting of the gear.

7. Install mounting fixture, Cat. 6744046G1 in place of vertical shaft (only if new gears are being assembled). See Fig. 5-12. With lower end of fixture mounted in bottom bearing housing of vertical shaft and upper ring registering in top housing bore, use pointer on fixture with feelers to obtain correct dimension from centerline of vertical shaft to face of spacer on horizontal shaft. Adjust shim pack between sleeve flange and gear box to produce the dimension marked on the gear within limits of plus or minus 0.001 inch.

8. Remove measuring fixture and assemble the gear, tight against the spacer on horizontal shaft, as follows:

   a. Remove capscrews and, using jackscrews, pull out the bearing cap. This allows the horizontal shaft to be moved out far enough to place gear in gear box.

   b. Heat gear for horizontal shaft in oven or oil bath to not more than 180 C; while hot, place it in position inside gear unit. Quickly insert end of horizontal shaft into bore of gear until gear hub is tight against the spacer on shaft. Allow gear to cool and shrink on shaft.

   c. Assemble lock washer and nut; tighten nut and lock.

   d. Reassemble bearing cap with shim pack in place; assemble and tighten all capscrews.

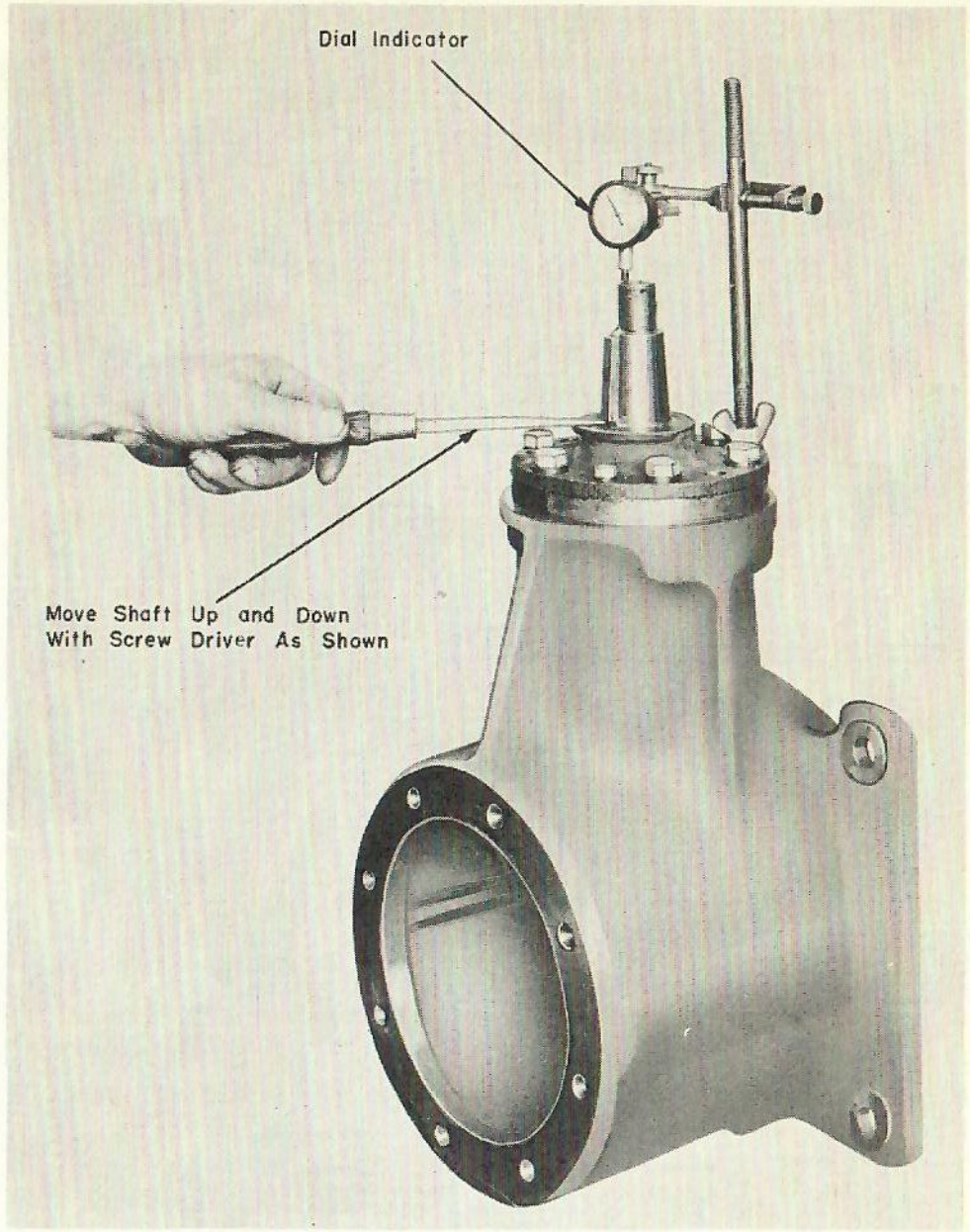

Fig. 4-12
Method of mounting dial indicator on Type GA-14 gear unit to measure end play.

9. If old bearings are being reassembled, replace shim pack between cap and sleeve EXACTLY THE SAME AS WHEN REMOVED. This insures that roller bearings will operate in same position on outer bearing races.

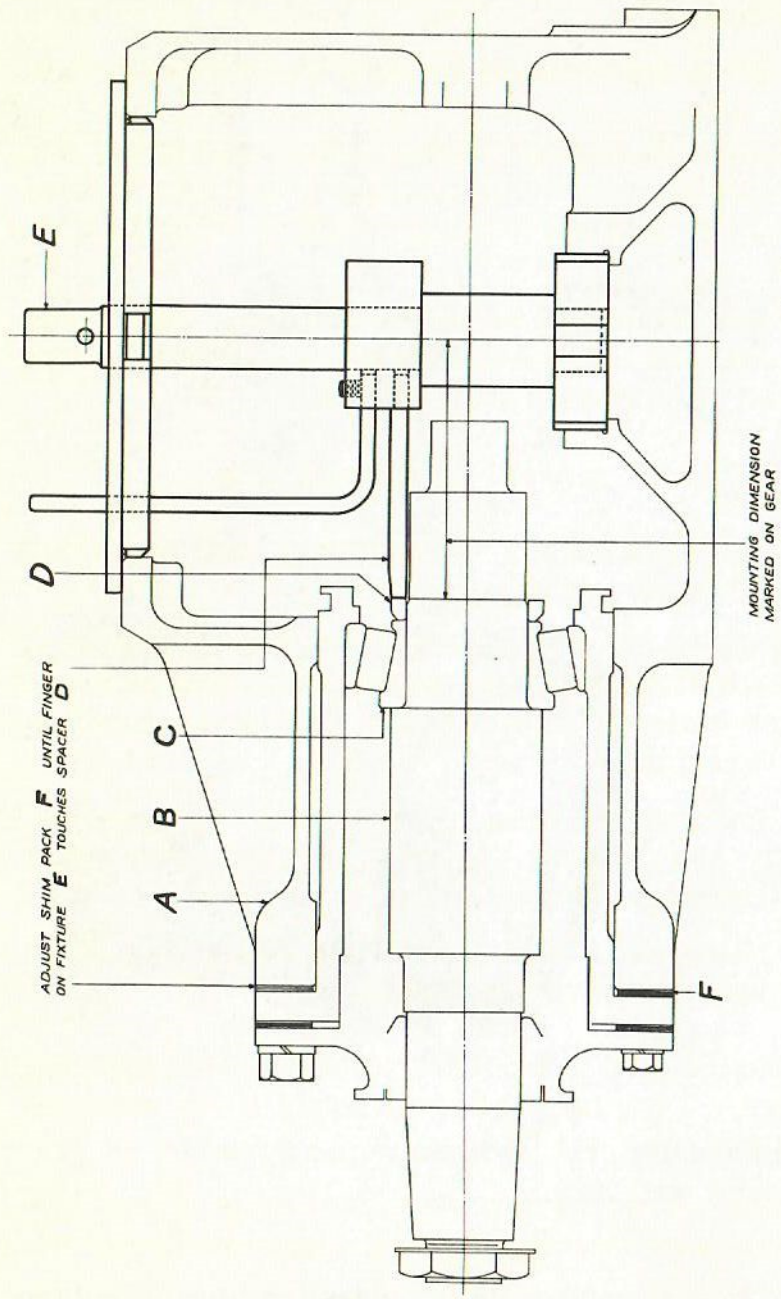

Fig. 5-12
Installation of measuring fixture, Cat. 6744046G1 to check mounting of gear on horizontal shaft.

10. If new bearings are assembled on horizontal shaft, adjust shim pack to produce end play of 0.003 to 0.005 inch for shaft. See Fig. 4-12. Do not disturb shim pack between sleeve and gear box.

11. Assemble outer race of bearing for vertical shaft. Keep race square with fit; place a copper or bronze block against bearing race and tap it into gear-box fit. Assemble retaining ring, tighten capscrews and wire heads together with locking wire.

12. Heat vertical-shaft gear to not above 180 C and, with key in shaft, assemble it on shaft tight against shoulder on vertical shaft.

    NOTE: Later models do not have key.

13. Heat shaft collar to 150 to 180 C and assemble on shaft tight against gear hub.

14. Heat upper-bearing housing to 100 C and drop double ball bearing into housing fit. Smear some grease on lower row of balls before assembling bearing on shaft.

15. Heat housing and bearing assembly to approximately 100 C and assemble it on shaft with inner race tight against collar.

16. Heat flinger to 150 to 180 C and place it on shaft tight against inner bearing race.

17. Measure out 2 1/2 ounces of G-E ball-bearing grease, Type D6A2A3, and apply it to exposed balls and over the flinger.

18. Assemble bearing cap with gasket in place between cap and bearing housing; tighten capscrews.

19. Heat inner race of bottom bearing to 100 C and place it on end of shaft, tight against shoulder. Assemble flat washer and nut; tighten nut and lock with cotter pin.

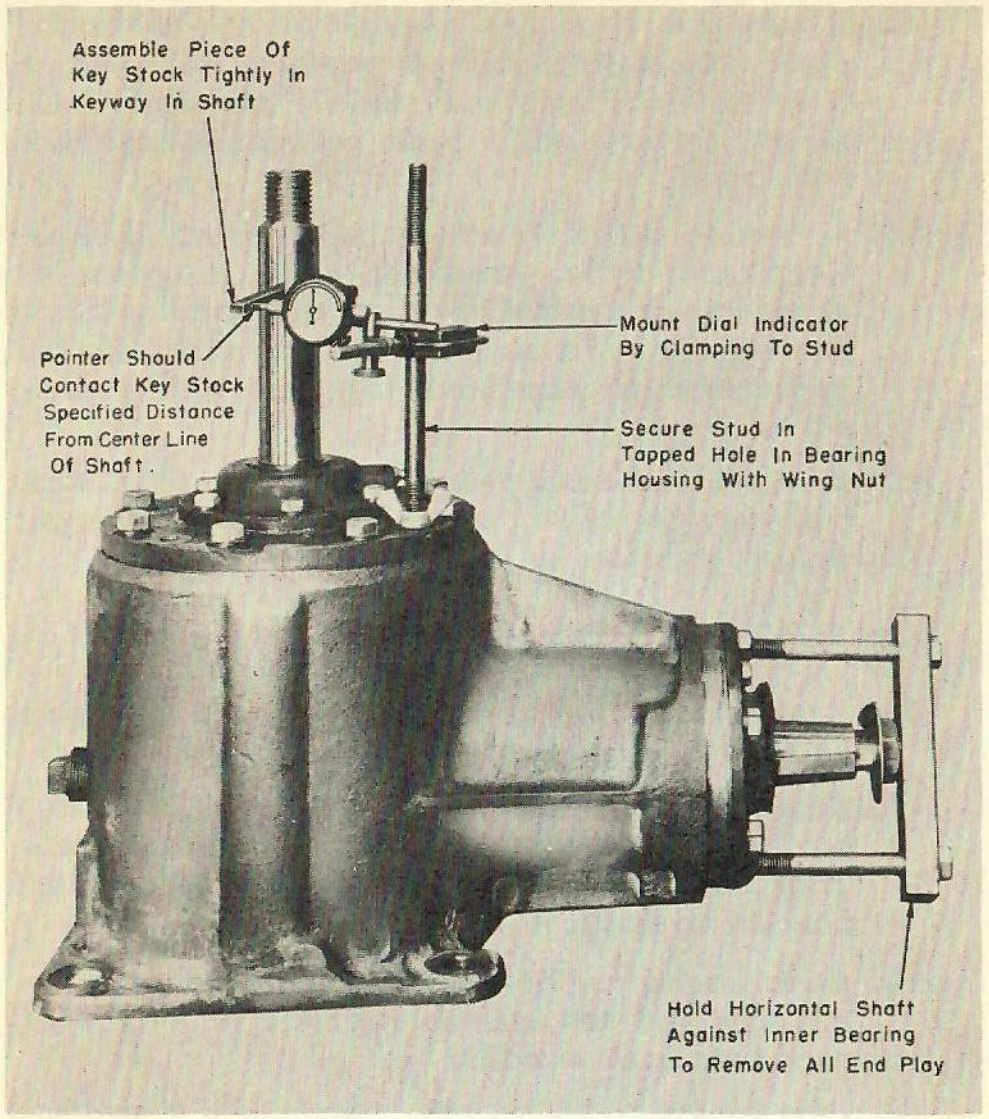

Fig. 6-12
Method of measuring back lash of gears in Type GA gear reduction unit.

20. Lower the vertical-shaft assembly into gear unit; make sure that matched gears are assembled with tooth mesh indicated on the gears (i.e. the X on the one member between the two X's on the other). Place shim pack between housing and gear box EXACTLY THE SAME AS WHEN REMOVED. Pull bearing housing into place with capscrews.

21. Lock horizontal shaft to keep horizontal gear from moving (see Fig. 6-12), and adjust back lash as follows:

    a. Assemble a piece of key stock in keyway of vertical shaft, long enough to engage a dial indicator three inches from centerline of vertical shaft.

    b. Mount dial indicator on a stud screwed into an ejection hole in bearing housing.

    c. With pointer against key stock at a point three inches from center of shaft, measure true back lash of gearing.

    d. If old gears are being reassembled, adjust shim pack (if necessary) to produce same back lash as measured before disassembly of gear unit. Refer to OVERHAUL instructions.

    e. If new gears are installed, adjust shim pack to produce a back lash of 0.006 to 0.009 inch.

22. Heat flange (or coupling) to approximately 60 C (140 F) and assemble on horizontal shaft with key; assemble and tighten nut and lock with cotter pin.

23. Rotate horizontal shaft by hand to be sure both shafts turn freely without binding.

24. Replace gears in matched pairs only; replace complete bearings only.

25. Before placing unit in service, fill gear box with recommended oil.

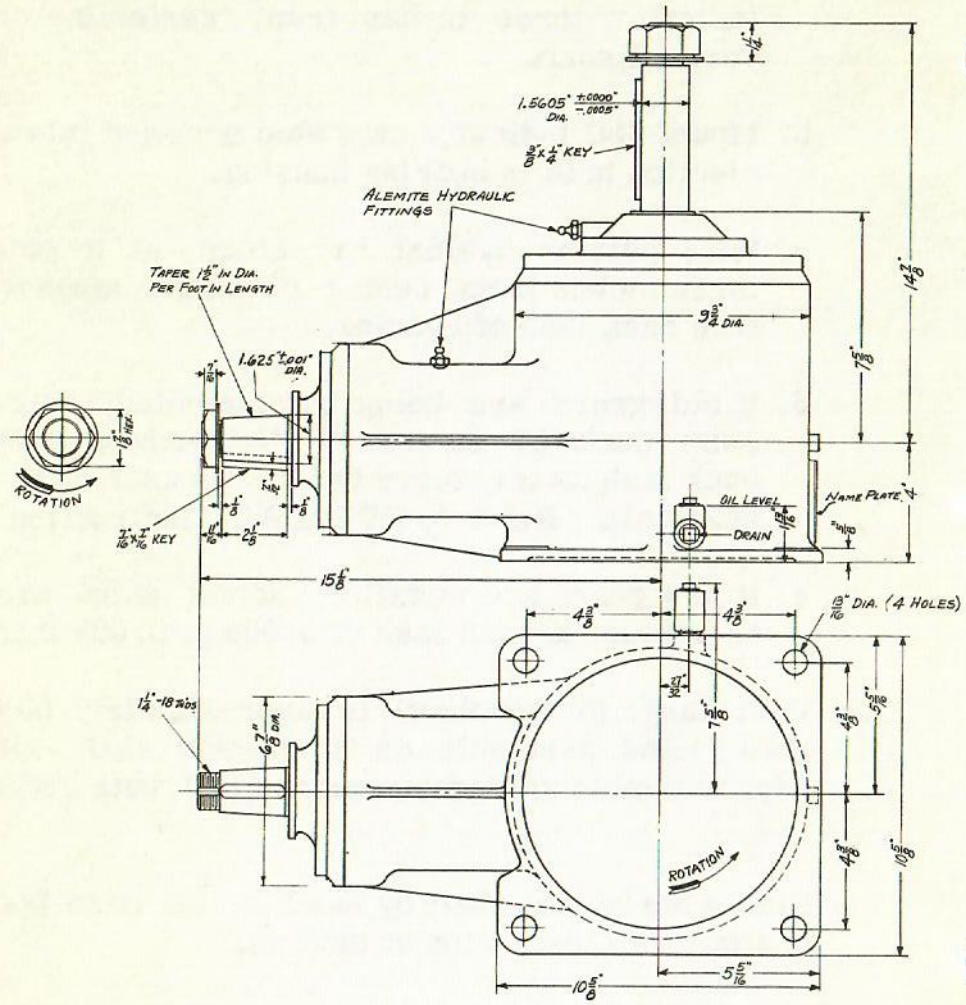

Fig. 7-12
Outline dimensions of Type GA-14 gear unit.

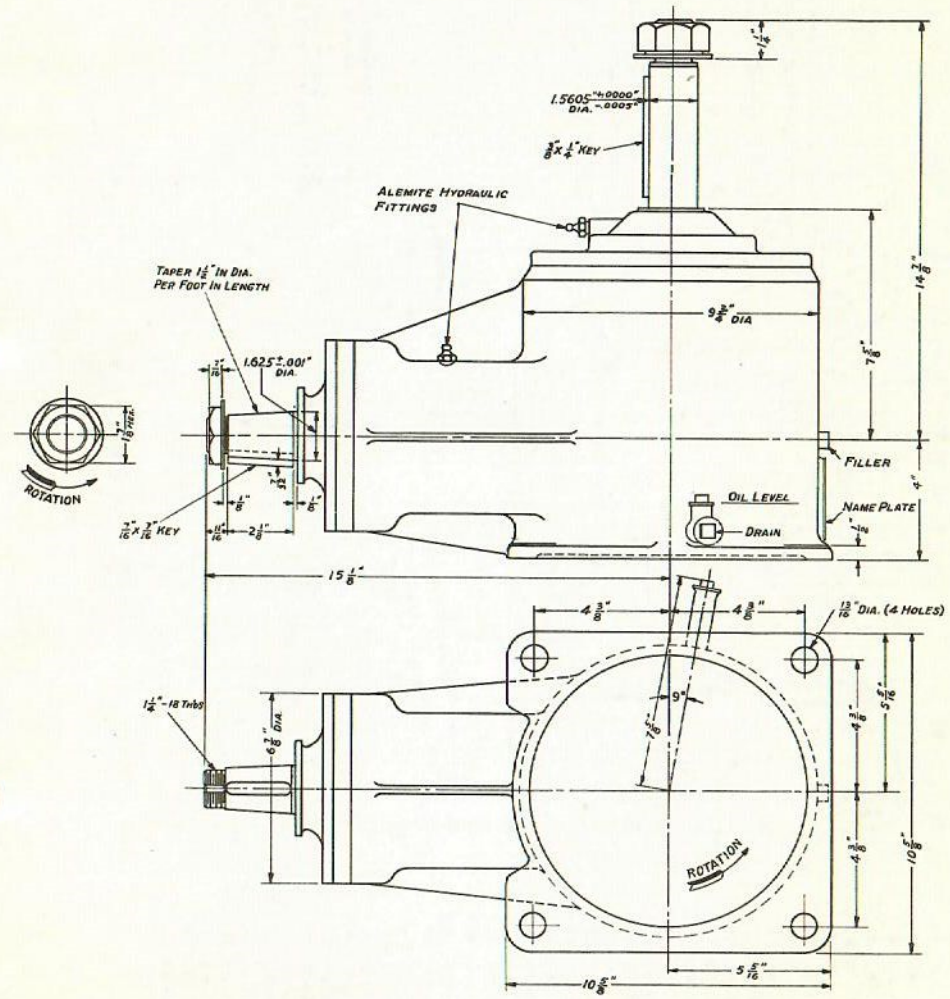

Fig. 8-12
Outline dimensions of Type GA-15 gear unit.

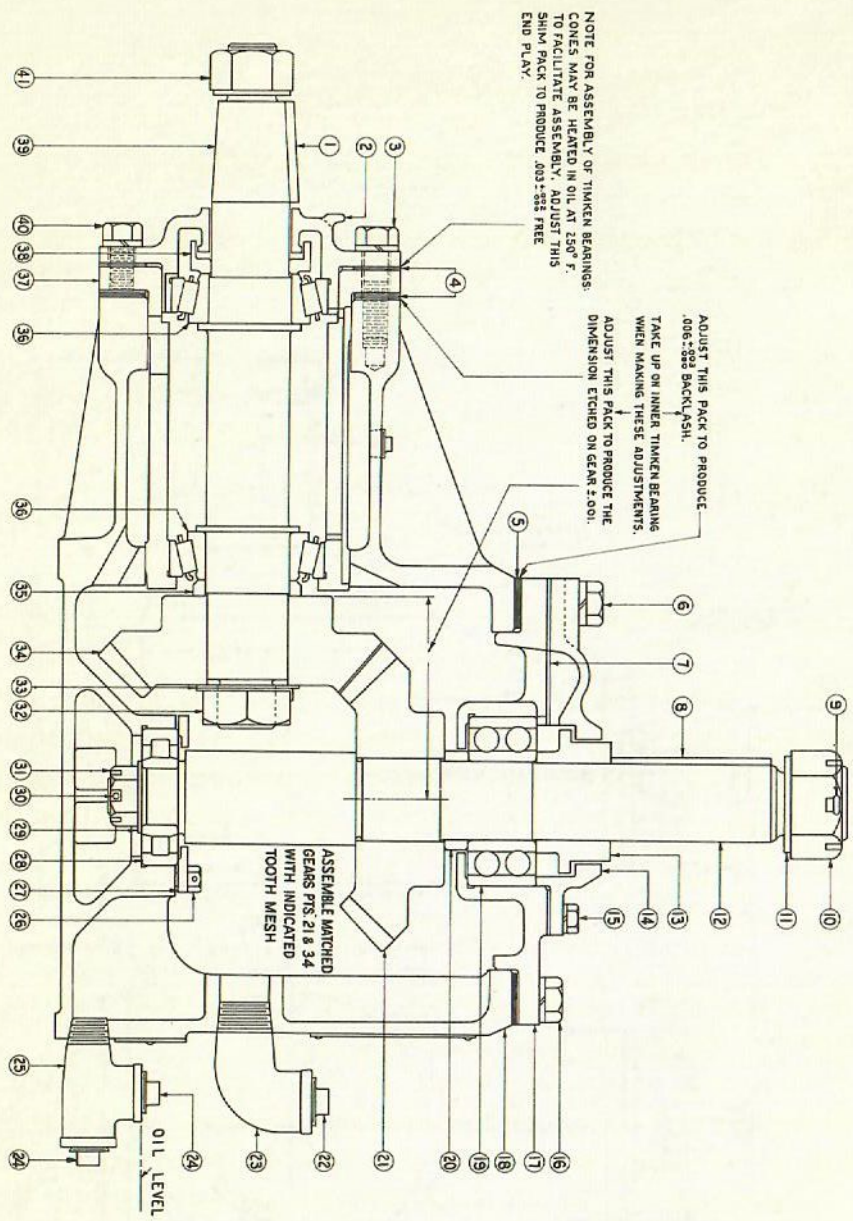

RADIATOR-FAN GEAR UNIT
Model 7GA14F1

MAINTENANCE DATA

Oil Capacity of Gear Box . . . . . Approx. 2 3/4 pints

End Play, Horizontal Shaft - New . . 0.003 to 0.005 in.
Worn Limit . . . 0.010 in.

Back Lash of Gears
With New Gears . . . . . 0.006 to 0.009 in.
Maximum permissible due to worn gears . 0.025 in.

Gear Ratio . . . . . 1 to 1

Weight
Complete Gear Box . . . . . 145 lb

All earlier forms of the Type GA-14 gear unit may be changed over to Form F (completely oil lubricated) by obtaining new upper and side bearing housings, upper bearing cap, flingers and gasket and remachining the gear box and sleeve.

LUBRICATION

All bearings and gearing are lubricated by oil splashed by gearing from oil reservoir.

Maintain oil level in box within 1/4 inch of top of top opening in Tee fitting located at base of gear box. Inspection periods must be frequent enough to insure that oil level does not fall below this point. To fill reservoir, remove pipe plugs in top of Tee and in filler pipe (street elbow). Pour oil in filler pipe until it runs out of top of Tee fitting. Replace both plugs.

Use a good grade of straight mineral oil, SAE-40, in gear box.

Drain and flush gear box annually and refill with new oil.

INSPECTION AND OVERHAUL

Refer to INSPECTION and OVERHAUL instructions for Model 7GA14A1.

DISASSEMBLY OF GEAR UNIT

Refer to Fig. 9-12 and Fig. 2-12.

1. Remove capscrews holding vertical-shaft bearing cap to gear box.

2. Use tapped ejection holes on same bolt circle to assist in lifting out assembly of vertical shaft, complete with ball bearings, bearing housing, bearing cap, flinger, collar and gear. Keep shim pack intact for reassembly.

3. Take off nut and washer and pull inner race of bottom bearing off shaft, using puller, Cat. 6756562G4. See Fig. 2-12.

4. Remove nut and key from vertical shaft. Take out capscrews and remove bearing cap; do not damage gasket between cap and housing.

5. Place vertical-shaft assembly in a press, fan end up, and support it with a plate under the gear. Place pressure cap over end of shaft and press shaft out of gear, collar, bearing with housing and flinger. Use puller, Cat. 6756562G5 as shown in Fig. 2-12.

6. Break locking wire and remove capscrews and retaining ring for lower bearing in gear box. Using puller, Cat. 6756562G6, pull outer race from gear box. See Fig. 2-12.

7. Remove nut and driving flange or coupling from outer end of horizontal shaft. Take out key in shaft.

8. Remove horizontal shaft with bearings, bearing cap, etc., and at same time remove gear from shaft, as follows:

   a. Unscrew street elbow (filling pipe) from end of box; remove nut and washer from gear end of shaft.

   b. Take out all capscrews at coupling end of gear box. Using ejection bolts in two holes provided, remove bearing cap and shim pack; keep shim pack intact for reassembly.

   c. Place gear box in hydraulic press, supporting it on flanged end of sleeve. See Fig. 3-12. Horizontal shaft will drop down until hub of gear rests against end of sleeve.

   d. Insert a round bar through hole for street elbow and against end of shaft. Protect end of shaft by placing a copper plate between end of bar and end of shaft and press shaft out of gear.

9. Remove gear box from press; insert jackscrews in tapped holes in flange of sleeve, and jack the sleeve from gear box. Keep shim pack intact for reassembly.

10. To pull bearing cones with spacer and flinger from horizontal shaft, use puller Cat. 6756562G3. See Fig. 2-12.

11. To remove bearing cups from bearing cap and sleeve, tap or press them from the fit.

ASSEMBLY OF GEAR UNIT

Refer to Fig. 9-12.

Special tools required:

Measuring fixture Cat. 6744046G1
Dial indicator with support

If all old parts are reassembled in gear box, replace all shim packs just as they were. If new parts are installed, it may be necessary to adjust shims to obtain correct end play and back lash specified for a new unit.

1. Heat sleeve and bearing cap to 100 C (212 F) and drop bearing cups into place. Be sure cups are tight against shoulders when cold.

2. Heat cones of bearings in oil bath to 100 C and place them on horizontal shaft, tight against shaft shoulder. Check with feelers when cold.

3. Heat gear-end spacer and coupling-end flinger to 120 C (248 F) and assemble them on shaft: be sure they are tight against bearing cones when cold.

4. Press sleeve into position in gear box with shim pack EXACTLY THE SAME AS WHEN REMOVED. Make sure that oil groove on outside of sleeve is in upper position and lines up with oil intake slot in gear-box housing. If old gear is reassembled, it should not be necessary to change the shim pack; if new gears are mounted, it may be necessary to adjust shim pack to produce correct mounting dimension as marked on new gear.

5. Assemble horizontal shaft into sleeve and assemble bearing cap, omitting the shim pack; draw it into place with several capscrews. By omitting shim pack, all free end play is eliminated for checking mounting of the gear.

6. Install mounting fixture, Cat. 6744046G1 in place of vertical shaft (only if new gears are being assembled). See Fig. 5-12. With lower end of fixture mounted in bottom bearing housing of vertical shaft and upper ring registering in top housing bore, use pointer on fixture (with feelers) to obtain correct dimension from centerline of vertical shaft to face of spacer on horizontal

shaft. Adjust shim pack between sleeve flange and gear box to produce the dimension marked on the gear within limits of plus or minus 0.001 inch.

7. Remove measuring fixture and assemble the gear, tight against the spacer on horizontal shaft, as follows:

   a. Remove capscrews and, using jackscrews, pull out the bearing cap. This allows the horizontal shaft to be moved out far enough to place gear in gear box.

   b. Heat gear in oven or oil bath to not more than 180 C (356 F); while hot, place it in position inside gear box. Quickly insert end of horizontal shaft into bore of gear unitl gear hub is tight against the spacer on shaft. Allow gear to cool and shrink on shaft.

   c. Assemble lock washer and nut; tighten nut and lock.

   d. Reassemble bearing housing (cap) with shim pack in place; assemble and tighten all capscrews.

8. If old bearings are reassembled, replace shim pack between housing and sleeve EXACTLY THE SAME AS WHEN REMOVED. This insures that roller bearings will operate in same position on outer bearing race.

9. If new bearings are assembled on shaft, adjust shim pack to produce end play of 0.003 to 0.005 inch for shaft. See Fig. 4-12. Do not disturb shim pack between sleeve and gear box.

10. Assemble outer race of bearing for vertical shaft. Keep race square with fit; place a copper or bronze block against bearing race and tap it into

gear-box fit. Assemble retaining ring, tighten capscrews and wire heads together with locking wire.

11. Heat vertical-shaft gear to not above 180 C (356 F) and mount it on shaft tight against shoulder.

12. Heat collar to between 150 to 180 C (302 to 356 F) and mount it on shaft tight against gear hub.

13. Heat upper bearing housing to 100 C (212 F) and drop ball bearing into housing fit.

14. Heat housing and bearing assembly to approximately 100 C and assemble it on shaft with inner race tight against collar.

15. Heat flinger to 150 to 180 C and mount it on shaft tight against inner bearing race.

16. Heat inner race of bottom bearing to 100 C and mount it on end of vertical shaft, tight against shoulder. Assemble washer and nut; tighten nut and lock with cotter pin through shaft.

17. Lower the vertical-shaft assembly into gear unit; make sure that matched gears are assembled with tooth mesh indicated on the gears (i.e. the X on one member between the two X's on the other). Place shim pack between housing and gear box EXACTLY THE SAME AS WHEN REMOVED. Pull bearing housing into place with capscrews.

    NOTE: By leaving off the bearing cap, the oil hole through bearing housing provides a convenient means of sighting the gears to obtain the proper tooth mesh.

18. Lock horizontal shaft to keep horizontal gear from moving, (see Fig. 6-12) and adjust back lash as follows:

    a. Assemble a piece of key stock in keyway of vertical shaft, long enough to engage a dial indicator three inches from centerline of vertical shaft.

    b. Mount dial indicator on a stud screwed into an ejection hole in bearing housing.

    c. With pointer against key stock at a point three inches from center of shaft, measure true back lash of gearing.

    d. If old gears are reassembled, adjust shim pack (if necessary) to produce same back lash as measured before disassembly of gear unit. Refer to OVERHAUL INSTRUCTIONS.

    e. If new gears are installed, adjust shim pack to produce a back lash of 0.006 to 0.009 inch.

19. After adjusting back lash, assemble bearing cap with gasket and tighten all capscrews.

20. Assemble street elbow with pipe plug in filling hole in end of gear box.

21. Rotate horizontal shaft by hand to be sure both shafts turn freely without binding.

22. Assemble keys in both vertical and horizontal shafts and start nuts on shafts.

23. Replace gears in matched pairs only; replace complete bearings only.

24. Before placing unit in service, fill gear box with recommended oil until it runs out at top of Tee fitting.

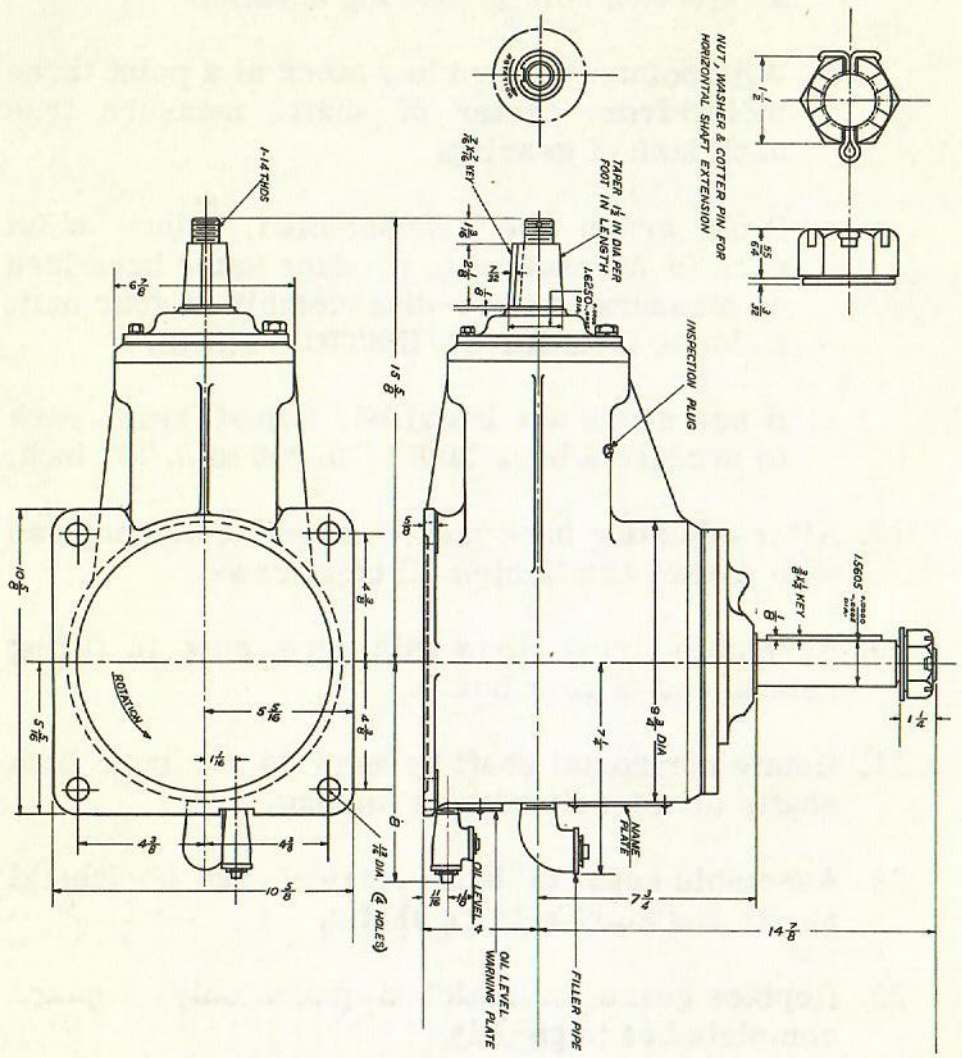

Fig. 10-12
Outline dimensions of Type GA-14-F gear unit.

CONTROL EQUIPMENT MAINTENANCE

A. GENERAL

1. Keep apparatus dry and clean.

   a. Power Apparatus - Main and auxiliary contactors, reversers, switches, controllers and resistors. Blow out with clean dry compressed air at 70-psi maximum pressure. Wipe the insulation surfaces with a dry, clean, lintless rag. Use solvents sparingly.

   b. Control Relays - in panels and equipment boxes. Clean panels and boxes with a small clean brush and remove dirt with a suction hose (vacuum cleaner). Do not use compressed air because dirt particles are often blown into the contacts and armature.

2. Keep terminal connections tight.

3. Replace worn, broken and corroded braided shunts.

4. Paint coils and insulated parts with G-E No. 2480 insulating varnish or Glyptal® No. 1201 red enamel. Keep varnish and paint away from contacts.

B. OPERATING COILS

1. If resistance is more than plus or minus 10 per cent from value given on data pages, or if there is a characteristic burned odor, install a new coil.

2. If coil insulation is damaged, dry or brittle, reinsulate with varnish or enamel as prescribed in item A-4.

3. Renew coils with badly damaged leads. Lead insulation damaged in spots can be repaired with paint and varnish, or by installing flexible insulated tubing.

C. COPPER OR ALLOY CONTACT TIPS, SEGMENTS AND FINGERS

1. Smooth burned or beaded surfaces with a small fine file. It is not necessary to remove small pits. Be sure that full contact is obtained across and between the contact surfaces after filing. See notes on Figs. 1-13 and 2-13.

2. Install new parts when contacts are badly pitted or worn halfway through at the contact surfaces.

D. SILVER-FACED CONTACTS, FINGERS AND INTERLOCKS

1. Clean surfaces with a clean, lintless cloth moistened with a suitable cleaning solvent. File surfaces smooth using fine mill file. DO NOT USE SANDPAPER OR EMERY CLOTH AS THEY LEAVE GRAINS IMBEDDED IN THE SILVER THAT INSULATE THE CONTACTS. If serrated contact surfaces are worn, resharpen them with a small triangular file. Be careful not to bend contacts when filing or cleaning.

2. Renew contacts or fingers when silver facing is worn through.

E. TIP GAP - ALL CONTACTORS

1. Contact-tip gap is the distance between contact surfaces with the blades fully open. On old contacts, tip gap will be greater than the dimension given under DATA, by the amount of wear on the contact surfaces.

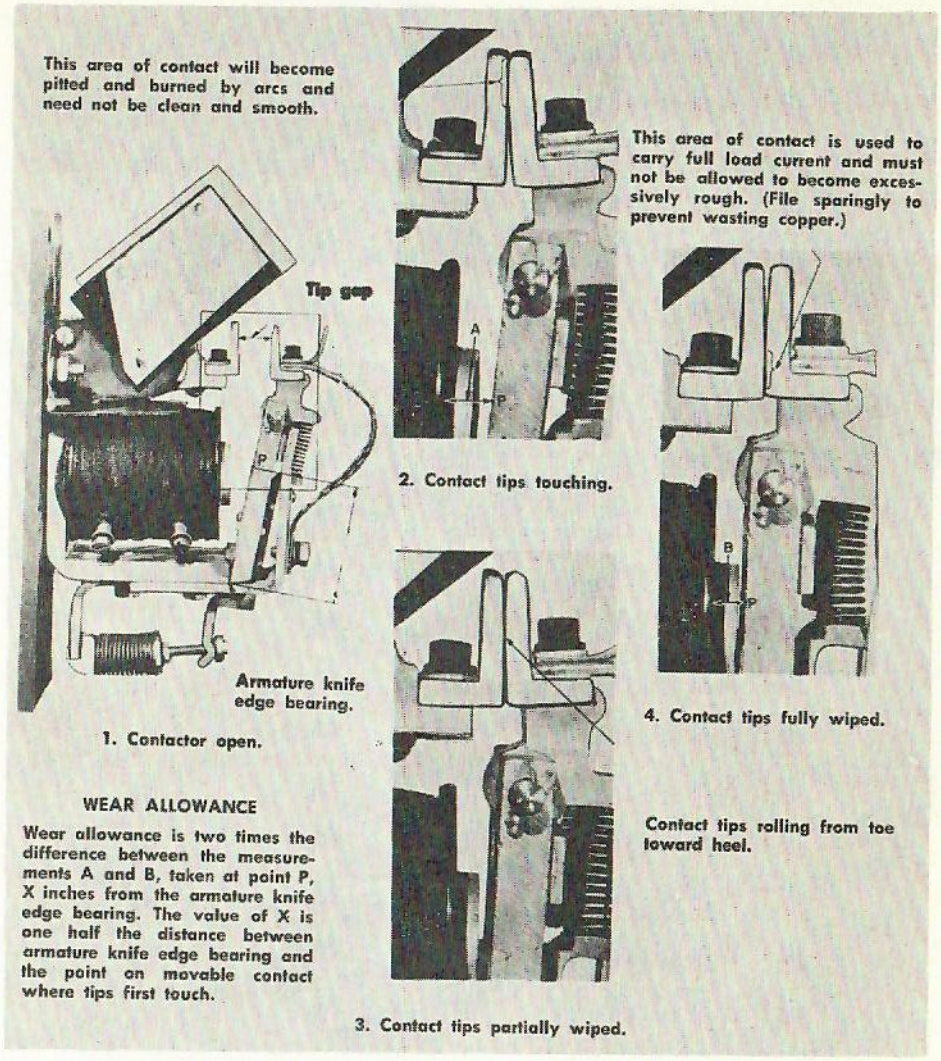

Fig. 1-13
G-E magnetic contactor Type 17CM showing tip operation (forms with single-pivoted contact tip.)

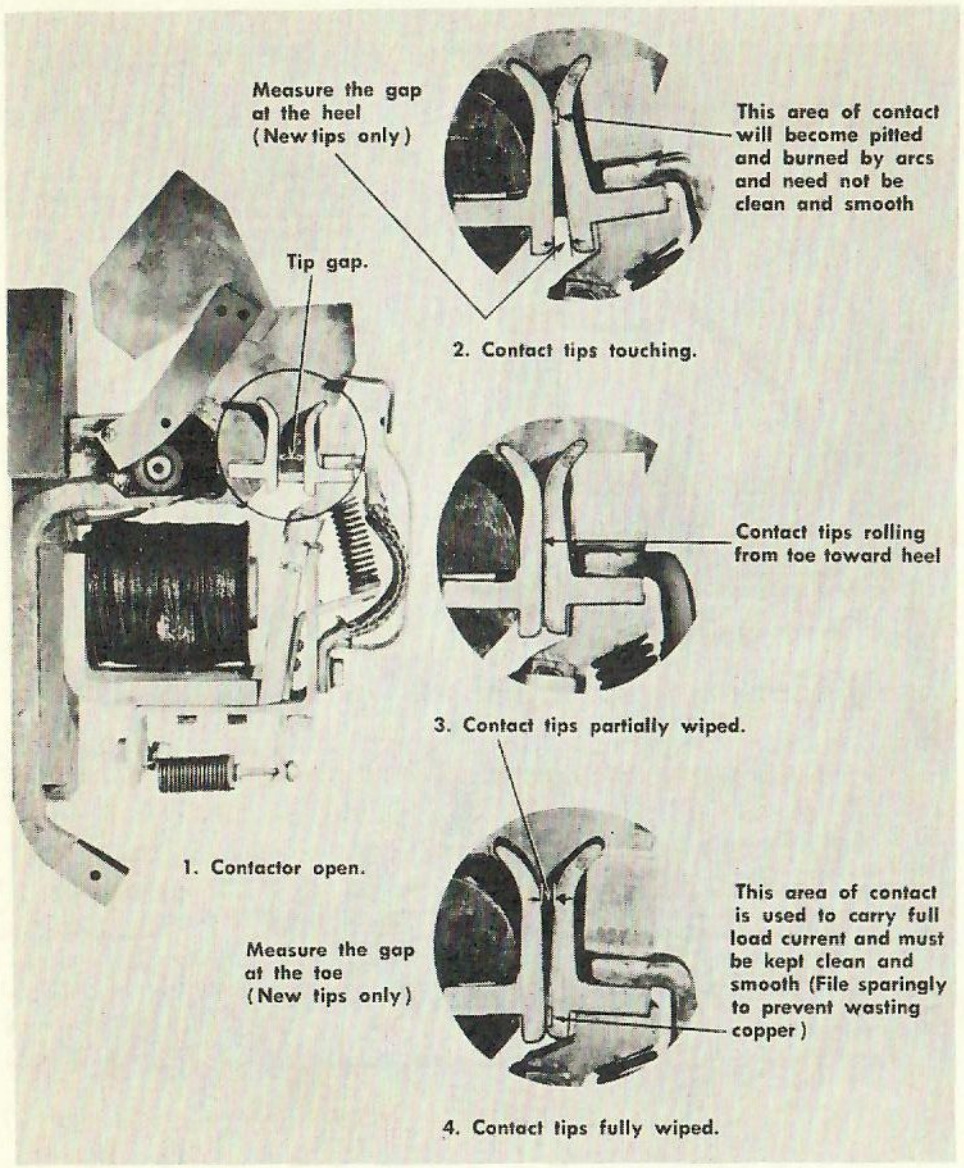

Fig. 2-13
G-E magnetic contactor Type 17CM showing tip operation (forms with double-pivoted contactor tip lever).

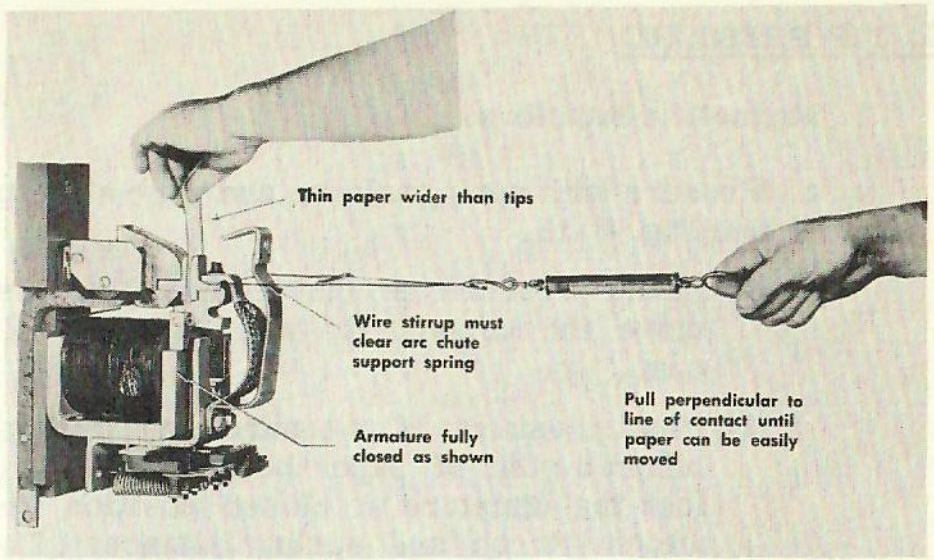

Fig. 3-13
Method of measuring final contact tip pressure.

2. Low gap is caused by worn tip lever or bent armature stop.

3. Check the gap during overhaul periods and after replacing any parts of the device. Correct tip-gap data is given under each device on Data Page.

F. TIP WEAR ALLOWANCE

1. Low wear allowance on magnetic contactors is caused by badly worn or bent contact tips, insufficient armature travel, or bent stationary contact-tip supports. High wear allowance is caused by bent tips or worn stop on contact-tip lever.

2. On pneumatic contactors the wear allowance is governed by the travel of the tip carrying arms from the inner to the outer stop.

3. For method of checking wear allowance on different types of contactors, refer to the following illustrations. Magnetic contactors - single pivoted (Fig. 1-13). Magnetic contactors - double pivoted (Fig. 2-13).

G. TIP PRESSURE

1. Magnetic contactors.

   a. Measure with spring balance and wire stirrup. See Fig. 3-13.

      (1) Initial pressure is that required to just move the contact tip when armature is open.

      (2) Final pressure is measured as follows: Insert a strip of paper between the tips, lock the armature in closed position and attach stirrup and spring balance. The reading at the instant the paper can be moved is the final pressure.

   b. Causes of incorrect pressure.

      (1) Low initial pressure indicates a defective wiping spring, worn spring seat in the tip lever, or worn stop on tip lever. Renew necessary parts.

      (2) Low final pressure indicates a defective wiping spring, low wear allowance or badly worn tips. Renew spring or tips. See Data Page for wear allowance limits.

      (3) High pressure is caused by excessive wipe, or by using a wrong spring.

2. Pneumatic Contactors (Type 17CP)

   a. Measure pressure according to Fig. 5-13.

H. ARC CHUTES

1. Renew or repair side plates if burned over three-quarters through. Recommended cement for repairing is G-E No. 12-G compound, or equivalent. Renew fiber end pieces if burned close to the rivets.

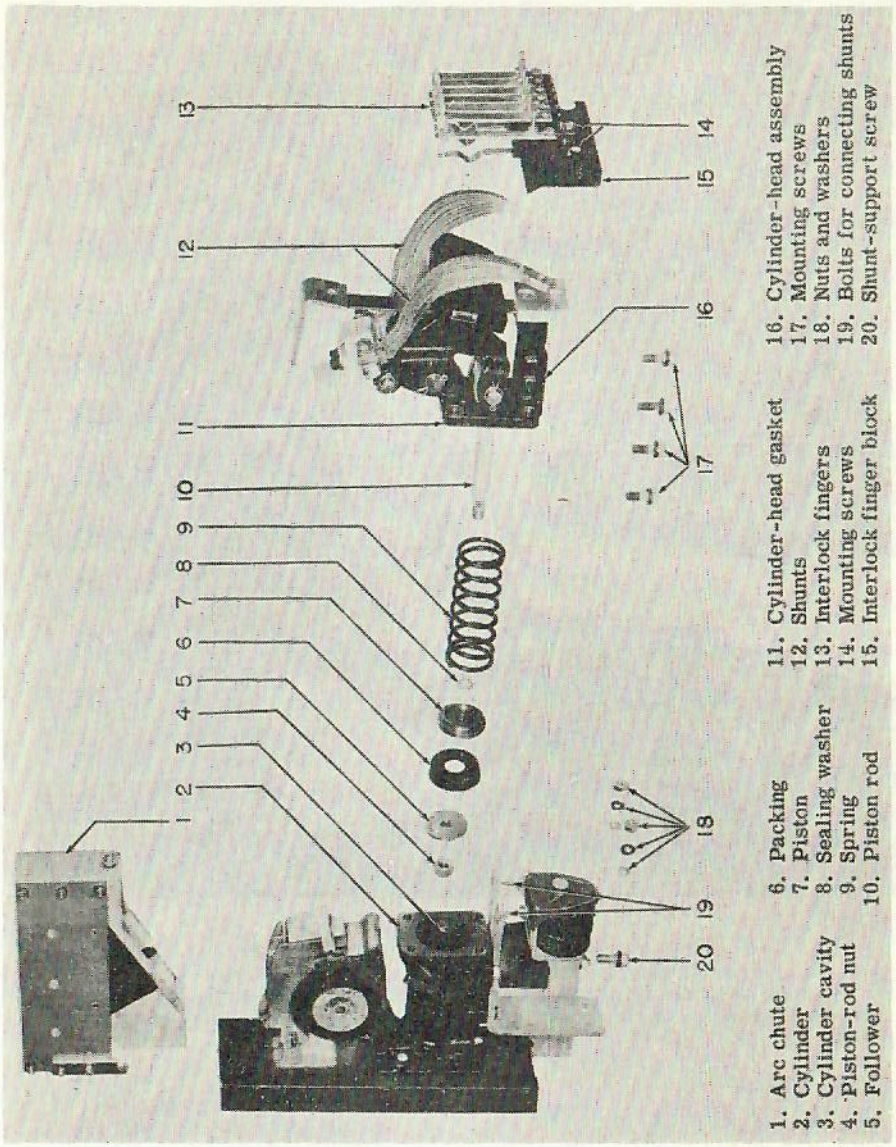

Fig. 4-13
Disassembled contactor Type 17CP2M3.

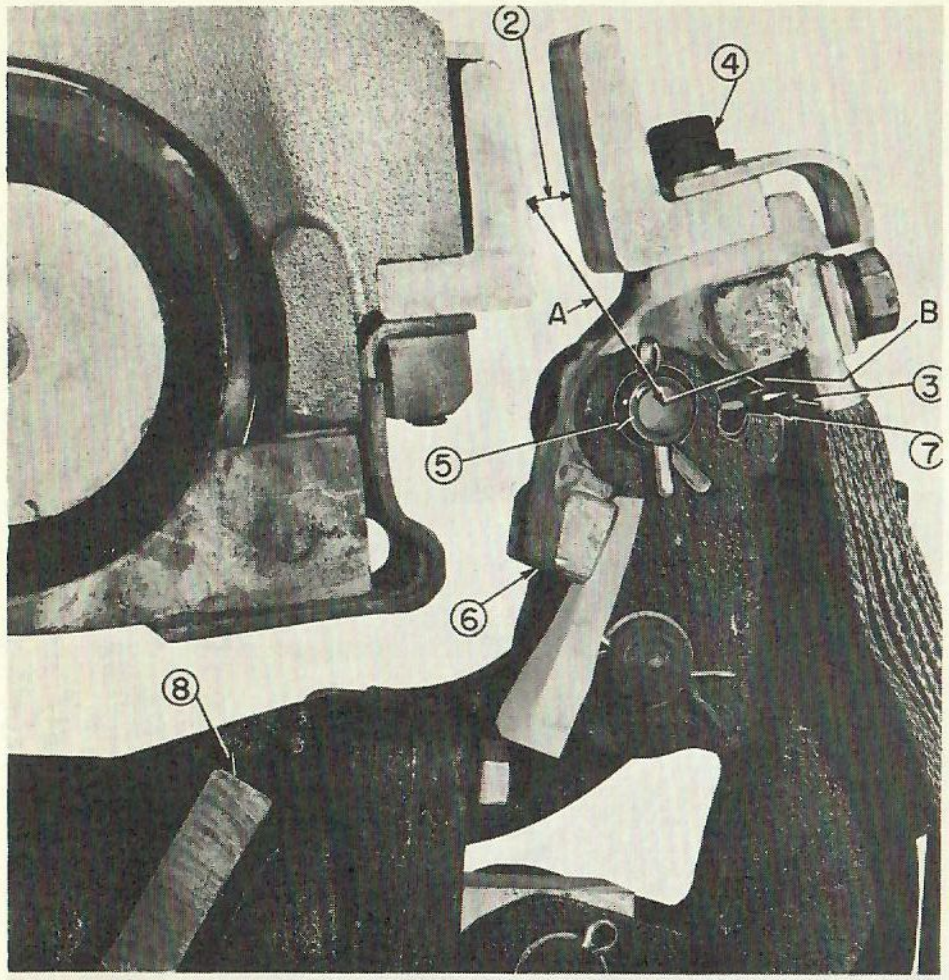

Measure pressure by attaching the spring balance as shown in Fig. 3-10. Insert a strip of paper between tip arm and inner stop. Pull on the balance; the reading at the instant the paper can be moved, is the initial pressure. Final spring pressure is the force required to pull the tip arm against the outer stop. The reading as the arm touches the stop is the final pressure.

1. Line of initial contact
2. Gap
3. Wiping spring
4. Bolt holding tip on operating (contact) arm
5. Hinge pin
6. Inner stop on operating arm
7. Outer stop on operating arm
8. Oil port
   Line "A" measured from center of hinge pin to line of initial contact
   Line "B" center of hinge pin to point on contact arm where wear allowance can be measured

Fig. 5-13
Measuring spring pressure.

2. Improperly mounted arc chutes cause contactor binding.

I. AIR CYLINDERS

Dry or gummy air cylinders allow air blow-by and they cause sluggish operation or stuck pistons.

J. LEATHER PACKING

1. Apply a few drops of G-E D50E5 oil through oil hole of air cylinder every three months.

2. Disassemble and check air cylinders at yearly intervals.

   a. Renew piston leathers if cracked or worn enough to cause air leakage.

   b. Soak stiff leathers in G-E oil D50E5 for three to four hours.

   c. Coat cylinder walls with thin film of G-E grease D50E6.

K. SYNTHETIC PACKING

1. Where synthetic packing is used in place of leathers, lubricate with a few drops G-E oil D50E5 every three months. At yearly overhaul replace packing if worn and when reassembling dip packing in G-E D50E5 oil.

L. MAGNET VALVES

Sticky or dirty magnet valves cause air blow-by and improper contact operation. See MAGNET VALVES - Section 18 for inspection and maintenance.

M. INTERLOCKS

Adjust studs or fingers to maintain wear allowance, gap, and pressure. Refer to Data Page.

N. HINGE PINS AND BUSHINGS

Renew pins, bushings and armatures (magnetic contactors) when side play indicates wear. Compare the action with similar parts on new devices as a criterion of when to renew these parts.

1. Pins and Oilite bushings on pneumatic contactors require only a few drops of G-E oil D50E5 when reassembling after overhauling.

2. Oil bushings on controllers and reversers (those not grease lubricated) monthly with a few drops of G-E oil D50E5.

O. RESISTORS

1. Clean insulators and grids by blowing with dry compressed air.

2. Renew broken, cracked, or damaged units and supports.

P. SWITCHES

Check springs, contacts and connections annually. Renew any broken parts.

CONTACTORS

A. TYPE 17CM CONTACTORS (SINGLE PIVOT)

TYPE	TIP GAP 32ND INCH	WEAR ALLOWANCE 32ND INCH	PRESSURE IN POUNDS INITIAL	PRESSURE IN POUNDS FINAL	OHMS RESISTANCE	AMPS TO OPERATE
17CM12J17	14 to 16	11 to 13	7 to 10	18 to 22	25.2	0.55
17CM12J31	14 to 16	11 to 13	7 to 10	18 to 22	25.2	1.03
17CM12L4	14 to 16	11 to 13	2.5 to 4	10 to 13	227	0.18
17CM12L30	14 to 16	11 to 13	2.5 to 4	10 to 13	153	0.22
17CM12S30	14 to 16	11 to 13	2.5 to 4	10 to 13	153	0.22
17CM15AA12	18 to 21	7 to 9	1.5 to 2	3 to 4	270	0.13
17CM15AA60	11 to 13	7 to 9	1.5 to 2	3 to 4	299	0.12
17CM15CC38	11 to 13	7 to 9	1.5 to 2	3 to 4	270	0.13
17CM15CC69	11 to 13	7 to 9	1.5 to 2	3 to 4	299	0.12

See CONTROL EQUIPMENT MAINTENANCE - Section 13.

B. TYPE 17CP CONTACTORS

TYPE	TIP GAP 32ND INCH	WEAR ALLOWANCE 32ND INCH	PRESSURE IN POUNDS INITIAL	PRESSURE IN POUNDS FINAL
17CP2J3, K7, AK7	16 to 20	13 to 15	5 to 7	12 to 18

Magnet Valve 17MV1A6 - See MAGNET VALVES - Section 18.
See CONTROL EQUIPMENT MAINTENANCE - Section 13.
See Figs. 4-13 and 5-13.

NOTES

CONTROLLERS

A. MASTER CONTROLLER, TYPE C-173-R2 (Single-Unit Locomotive)

Inspection and Maintenance

Inspect fingers for 3/32-inch drop after leaving cylinder segments with enough pressure (two to five pounds) for good contact without stubbing against cylinder segments.

Install new fingers when worn halfway through (0.05 inch). Inspect and adjust lock to close when handle is advanced from IDLE position, and to open when moved into IDLE position.

Apply a thin film of light, high-temperature grease (G-E D50E6) or equivalent to cylinder. Excessive lubrication causes poor contact.

Fig. 1-15 shows disassembly.

B. MASTER CONTROLLER, TYPE 17KC53A1 (Multiple-Unit Locomotive)

Wear Allowance	1/8 inch to 3/32 inch
Tip Gap	3/16 inch to 1/4 inch
Pressure	3/4 pound to 1 pound

Inspection and Maintenance

Inspect moving parts for free movement.

Inspect fingers for good contact, proper wear allowance, gap and pressure.

Install new fingers when contact tips are worn halfway through.

Inspect terminals and wiring; tighten and install new wiring where necessary.

Apply a small amount of light grease between cams and fingers.

See Fig. 2-15.

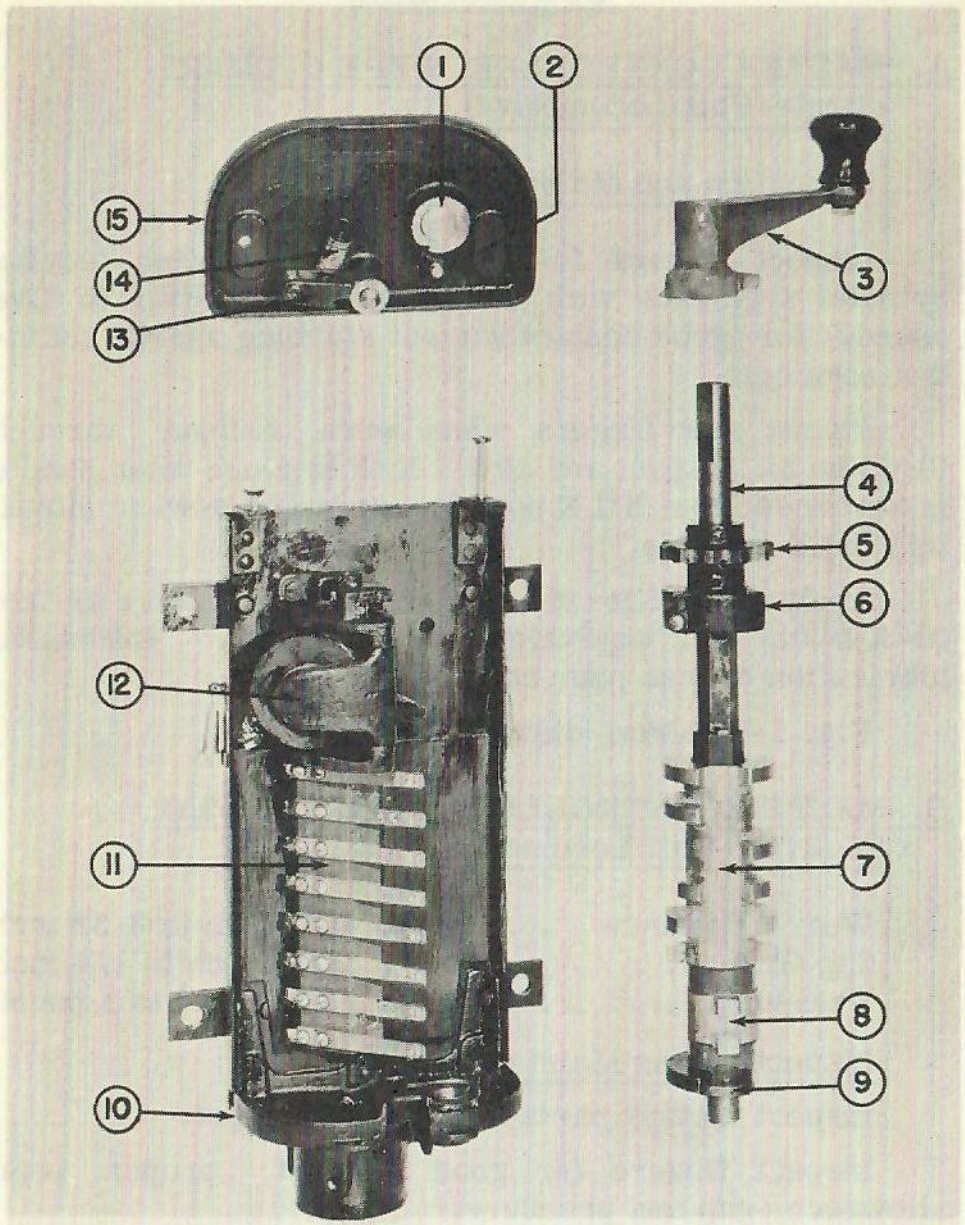

1. Bushing for cap plate
2. Spring post
3. Operating handle
4. Operating shaft
5. Starwheel
6. Locking collar with stop
7. Upper cylinder
8. Lower cylinder
9. Lower stop collar
10. Frame
11. Finger block
12. Lock coil mechanism
13. Check pawl with roller
14. Spring
15. Cap plate

Fig. 1-15
Type C-173-R2 controller, partly disassembled.

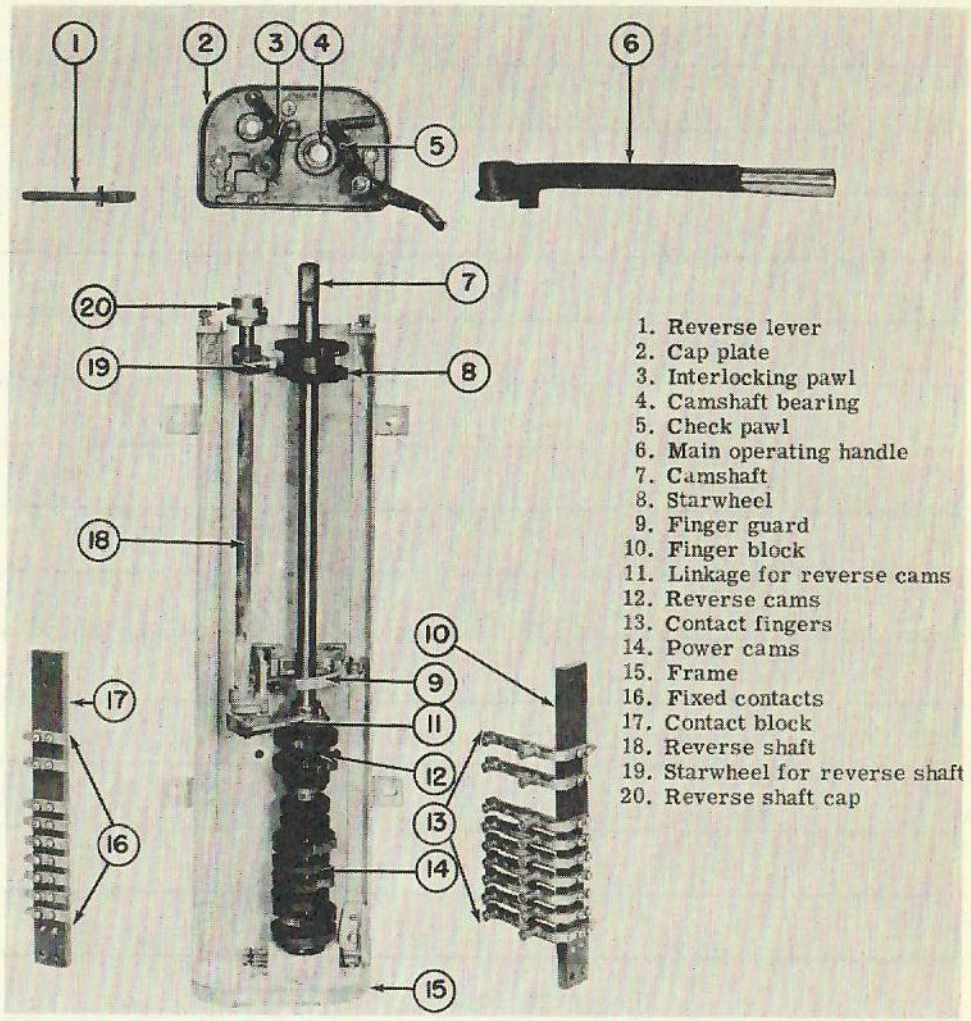

1. Reverse lever
2. Cap plate
3. Interlocking pawl
4. Camshaft bearing
5. Check pawl
6. Main operating handle
7. Camshaft
8. Starwheel
9. Finger guard
10. Finger block
11. Linkage for reverse cams
12. Reverse cams
13. Contact fingers
14. Power cams
15. Frame
16. Fixed contacts
17. Contact block
18. Reverse shaft
19. Starwheel for reverse shaft
20. Reverse shaft cap

Fig. 2-15
Type 17KC53A controller, disassembled.

NOTES

INSTRUMENTS, TYPE "DO"

INSPECTION

1. Set pointer on zero by turning adjusting screw.

2. Test pointer for sticking by electrically obtaining maximum deflection. If pointer does not readily return to zero, when the circuit is broken, remove instrument and return to General Electric Company, West Lynn, Mass., for cleaning and calibration.

   CAUTION: DO NOT INSTALL OR REMOVE INSTRUMENT FROM CIRCUIT UNLESS POWER HAS BEEN REMOVED.

3. A millivoltmeter and shunt combination, used as an ammeter, must have the same millivolt rating. The leads between the shunt and meter must be at least No. 14 (19/27 AWG) wire.

4. Clean shunts removing all foreign matter between and around plates.

5. Tighten shunt and meter terminal connections.

NOTES

INTERLOCKS

Interlock Type	Device Used on Type	Device Used on Diagram Symbol	Wear Allowance 32nd Inch	Tip Gap 32nd Inch	Pressure
17AF4A3	17CP2	S, SP1			2 to 5 lb
17AF4A4	17CP2	SP2			2 to 5 lb
17AF14H1	17CM12L4 17CM12L30	M1	3 to 4	7 to 9	Over 8 oz
17AF14H3	17CM12J17 17CM12J31	GS1	3 to 4	7 to 9	Over 8 oz
17AF14H9	17CM12J17 17CM12J31	GS2	3 to 4	7 to 9	Over 8 oz
17AF14F9	17CM15AA12 17CM15AA60	B	3 to 4	4 to 6	Over 8 oz
17AF14F3 17AF14S18	17CM15AA12 17CM15AA60	GF	3 to 4	4 to 6	Over 8 oz
17AF14K1	17CM15CC38 17CM15CC69	EF	3 to 4	7 to 8	Over 8 oz
17AF14F1	17LV40H9 17LV40H22	GR	3 to 4	3 to 4	Over 8 oz

NOTES

A. DATA

Type or Cat. No.	Type Apparatus Used on	Valve Travel Inch	Resis. 25 C Ohms	Current to Operate at Air Pressure
17MV1A5	17CP2K7 Contactor 17CP2AK7 Contactor	0.036	227	0.075 amp at 70 psi
17MV1A6	17CP2J3 Contactor	0.036	775	0.042 amp at 70 psi
17MV23A4	17MK3L9 Throttle Mech.	0.036	800	0.049 amp at 90 psi
17MV23C4	17MK3L11 Throttle Mech.	0.036	800	0.049 amp at 90 psi
TE-49-C2	17ME2A6 Sander Valve	0.036	290	0.025 amp at 125 psi
3046106	ME-57-A5, E5, E6 Reversers	0.036	886	0.04 amp at 100 psi

B. INSPECTION AND REPAIRS

1. Test valve operation by depressing pin on top of magnet valve. Sticky valves indicate cleaning is necessary.
2. With air pressure on valve, apply soapy water to pipe connections and exhaust port to test for leaks. Tighten leaky connections and if exhaust port leaks air, disassemble valve for cleaning.
3. To disassemble valve for cleaning:
   a. Remove cap plug to release inlet valve and spring.
   b. Remove top cover and armature to release exhaust-valve stem
   c. Unscrew magnet core with Spanner wrench, Cat. 260513, and lift out.

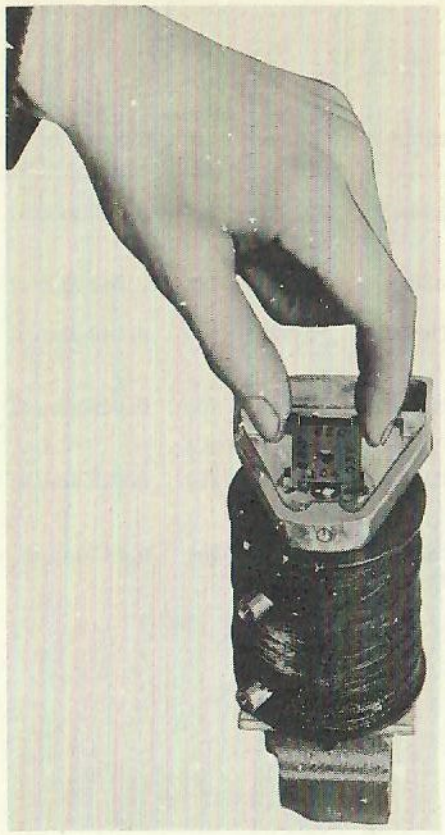

Fig. 1-18
Checking valve-stem travel with gage, Cat. 1499733.

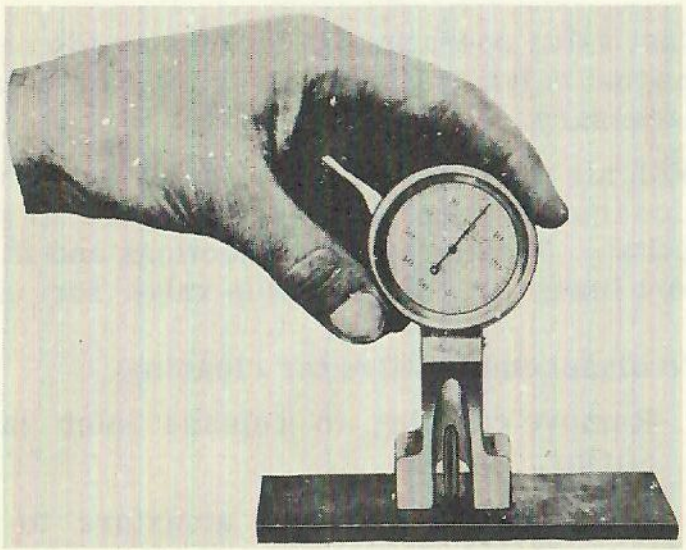

Fig. 2-18
Setting micrometer dial gage, Cat. 2812735 to zero on flat surfaces before using.

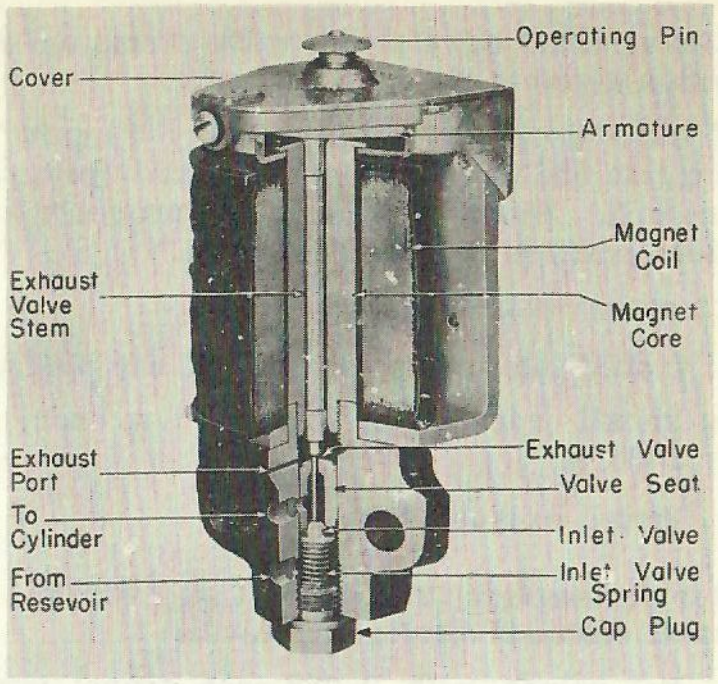

Fig. 3-18
Open coil, "ON" Type magnet valve.

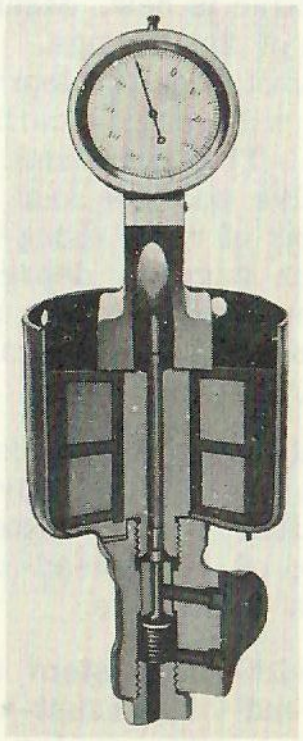

Fig. 4-18
Method of using micrometer dial gage.

4. Clean ports, valve seats, valve stems and spring with a suitable cleaning solvent.

5. If valve does not seat properly "lap in" with medium and fine lapping compound (or graphite and oil). When valve has been properly seated, clean ports to remove compound.

6. To reassemble valve:

   a. Install inlet valve, spring and cap plug.

   b. Install core with Spanner wrench, Cat. 260513.

   c. Install exhaust-valve stem.

7. Use rectangular limit gage, Cat. 1499733, to inspect exhaust-valve stem travel.

   a. For valves with 0.052-inch travel (stamped on cap plug) the exhaust-valve stem will extend 0.104 inch beyond the head of the magnet core when valve is new. Measure with 0.104-inch section of limit gage. Use 0.052-inch portion of limit gage to depress valve stem. A new valve will seat indicating proper 0.052-inch travel. The combined wear allowance on each valve and its seat is 0.020 inch. Measure wear of valve using 0.032-inch portion of limit gage to depress valve until seated. When gage no longer seats valve wear has been exceeded and new valve stems must be installed.

      (1) To install new stems, disassemble valve and seat new exhaust-valve stem. Cut off top of stem until it extends 0.052 inch above top of core head using 0.052-inch section of limit gage.

      (2) Install inlet-valve stem and engage into hole at end of exhaust-valve stem. Install inlet-valve spring and cap plug. Measure distance from top of exhaust-valve stem to top of magnet core using 0.104-inch section of limit gage or dial gage, Cat. 2812735. If stem extends more than 0.104 inch above core, cut off end of inlet-valve stem until 0.104-inch distance has been obtained.

   b. Install new valve seats when badly scored or worn. The seat block is pressed into the valve body with an 0.002 to 0.003-inch press fit allowance; therefore, it must be pressed out from the magnet-core end. Remove magnet core with Spanner wrench, Cat. 260513. Press new valve-seat block in place until collar registers against manifold counterbore. At the outlet-port side of valve body, drill a hole through outer wall of seat body. Drill hole the same size as hole in valve body and clean out chips.

   c. Magnet valve with 0.036-inch travel, when new, will have the exhaust-valve stem extend 0.088 inch above head of magnet core. If valve stem is depressed, the 0.032-inch portion of limit gage fails to seat valve, the worn valve stems must be renewed. The standard micrometer gage and fixture, Cat. 2812735 provides a direct reading for determining the amount of material to be removed from a valve stem and eliminates the cut-and-try process. See DATA, item A, for coil resistance, valve travel and operating current.

NOTES

OPERATING MECHANISMS

THROTTLE OPERATORS TYPES 17MK3L9 AND 17MK3L11

Inspection and Maintenance

Inspect moving parts for freedom of movement. Pull main lever upward away from pistons; depress each valve by hand and check that piston returns by itself when the valve is closed.

Correct sluggish movement by disassembling and lubricating piston leather packing with grease, G-E D50E6. Lubricate synthetic packing with oil, G-E D50E5.

Correct persistently sluggish action and blow-by by installing new piston packing. Inspect, adjust and maintain magnet valves as prescribed in Section 18.

See Fig. 1-19 for general construction of mechanism.

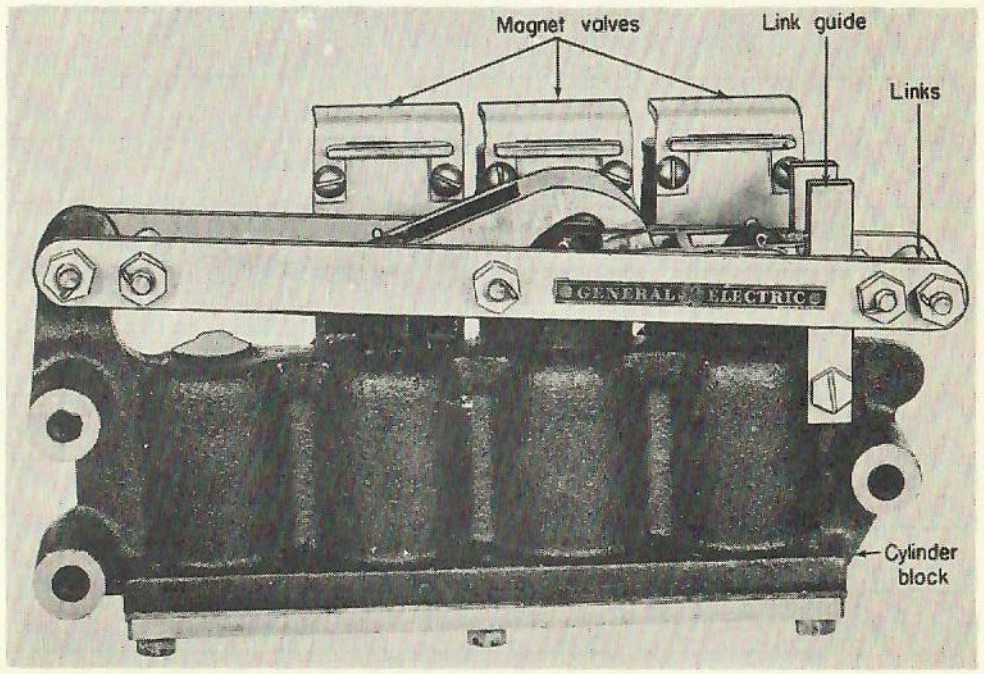

Fig. 1-19
Operating mechanism, Type 17MK3E.

NOTES

RELAYS

A. TYPE 17LC19 REVERSE-CURRENT RELAY

1. MAINTENANCE DATA

a. Contacts

(1) Tip Gap . . . . . 1/16 in.
(2) Wipe . . . . . 1/16 in.
(3) Contact Pressure . . . . . 6 oz

b. Coils	Shunt	Series	Differential
Res. at 25 C	29.4 ohms	0.00287 ohm	279 ohms

c. Resistor Tubes

R1 . . . . . 100 ohms
R2 . . . . .) 400 ohms total
R3) Set tap at 25 ohms

d. Inspection

(1) Inspect wiring to relay and resistor terminals.

(2) Inspect for burnt or badly worn contacts.

(3) Check relay for proper operating values as outlined under Bench Test.

2. BENCH TEST

At overhaul, coil replacement, or for checking operation of this relay, the following bench test setup and procedure are recommended.

a. Test Equipment

A special test setup is shown on Fig. 1-20. The equipment needed consists of two small rheostats, two small resistor tubes, and a 10-unit, 9-position ganged cam switch, Type SB1, with a development as shown on Fig. 1-20. Knife switches can be used instead of the SB1 switch if these switches are opened and closed according to the switch development shown on Fig. 1-20. A multi-scale voltmeter is required due to the wide range in voltage readings. In each step the voltmeter is automatically connected to read the voltage desired.

The only power supply required for testing these relays is a battery with a voltage corresponding to the relay system voltage.

b. Test Procedure

Connect relay in test circuit, Fig. 1-20, as shown in phantom, making sure polarity is correct. Follow steps per table (do not connect resistor tubes).

DIFFERENTIAL PICKUP	System Voltage 64 V
1. (a) Turn rheostat A to 0 ohms position.	
(b) Turn SB1 switch to position No. 3.	
(c) Read input voltage - adjust battery connections to give	60 - 62
2. (a) Turn A back to maximum ohms.	
(b) Turn SB1 to position No. 2.	
(c) Turn potentiometer B to 0 volts position.	
(d) Adjust B for differential voltage of	38 - 40
3. (a) Turn SB1 to position No. 3.	
(b) Adjust A toward 0 ohms for shunt voltage of	16.6 to 17.2

DIFFERENTIAL PICKUP (Cont.)	System Voltage 64 V
4. (a) Turn SB1 to position No. 4.	
(b) Adjust B for zero differential volts (relay should not pick up before 0 volts is reached; if relay does not pick up at 0 volts, proceed with step No. 5.)*	0
5. (a) Turn SB1 to position No. 5 (reversing differential coil leads).	
(b) Adjust B to apply a gradually rising "positive" differential voltage. Relay should pick up between*	0
and*	2.3
The relay is now adjusted for differential pickup and checked for correct coil polarity.	

*NOTE: If pickup is slightly outside this differential voltage range, adjust calibrating spring (only) and repeat steps 2, 3, 4 and 5. If pickup is far outside these limits, the relay is defective or incorrectly connected and adjustment of the calibrating spring is useless.

REVERSE-CURRENT BUCKOUT	
1. (a) With relay picked up, turn SB1 to position No. 6.	
(b) Adjust rheostat A to 0 ohms.	
2. (a) Turn SB1 switch to position No. 7.	
(b) Adjust A gradually to decrease the volts on the shunt coil.	
(c) Relay should drop out at	2.25 to 2.4
(d) Adjust buck-out screw (only) and repeat steps 1 and 2 until proper dropout is obtained.	

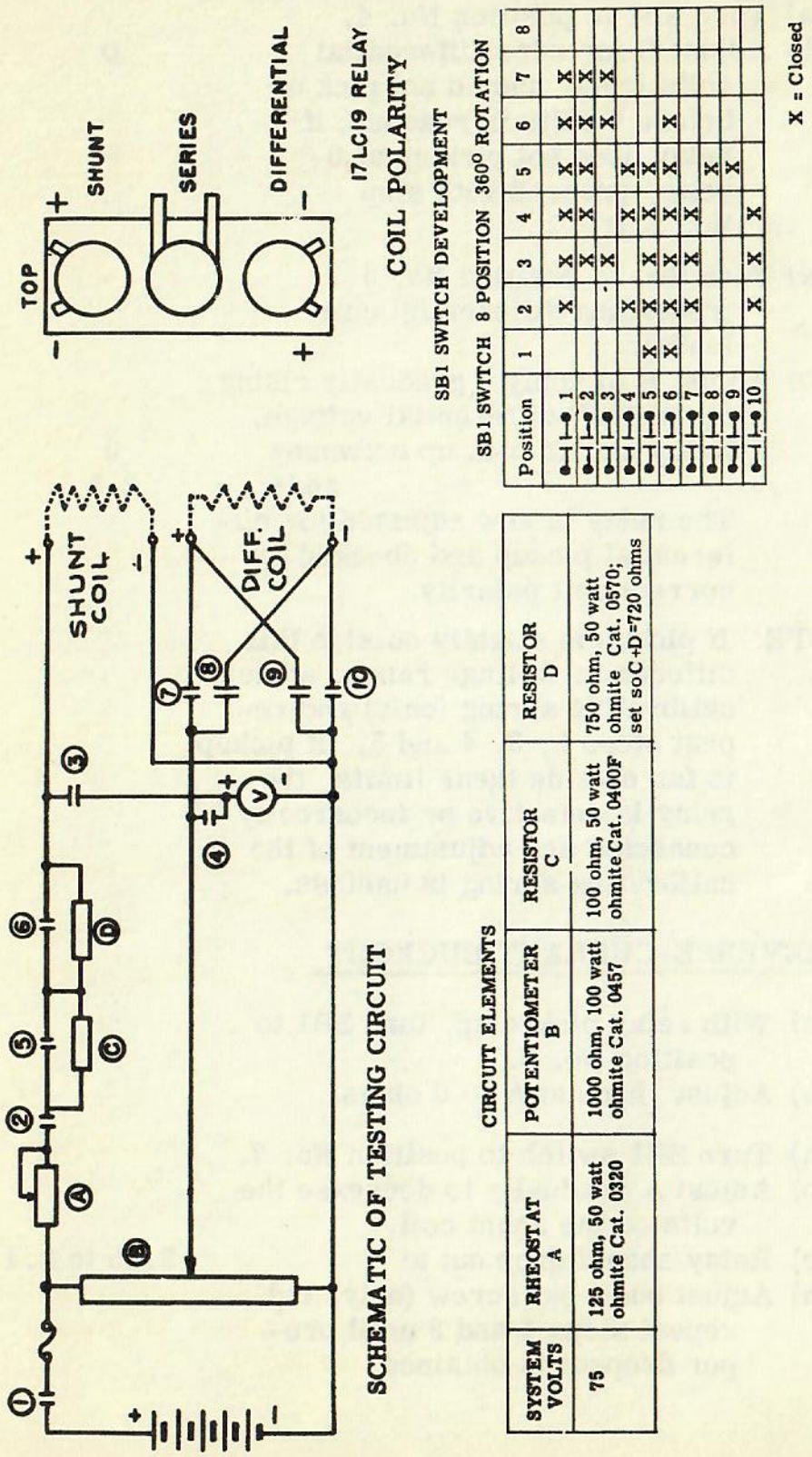

Fig. 1-20
Test setup for Type 17LC19 relay.

B. TYPE 17LV66J11 RELAY

1. DATA

a. Contacts (Silver Tips)

	Tip Gap	Wear Allowance	Tip Press.
D.T.	7/64 - 9/64 in.	2/32 - 3/32 in.	3 - 8 oz
S.T.	6/32 - 8/32 in.	2/32 - 3/32 in.	3 - 8 oz

b. Coil

Resistance . . . . . 299 ohms at 25 C
Amps to operate . . . . . 0.119 or less
Amps continuous 0.242

2. DISASSEMBLY OF TYPE 17LV66J1 RELAY - See Fig. 2-20

a. Remove coil lead terminal screws 4.

b. Remove two screws 16 holding armature 15 to cross bar 1; calibrating springs 2 will drop out.

c. Remove two cap screws 23 holding contact block 3 to relay magnet frame 20.

d. Remove pin 28 and coil lead retaining strip 22 and lift off contact block 3.

e. To disassemble contact block:

(1) Loosen stationary-contact nut sufficiently to allow fixed-contact studs 6 to be withdrawn from slot 7 in contact block 3.

(2) Remove nuts 5 holding movable-contact shunt terminals 14 and withdraw terminals through slots in contact block.

(3) Remove armature and finger-block assembly.

(4) Holding moving finger compression spring 24 and slide moving contact fingers 9 out of finger block 11.

f. To remove operating coil - See Fig. 2-20:

(1) Remove hex-head cap screw 10 that holds core 19 to magnet frame 20.

(2) Remove two small screws 17 holding coil 18 to base of relay magnet frame.

(3) Lift coil 18 from core 19.

3. REASSEMBLY - See Fig. 2-20

a. Insert core 19 in coil 18 and attach core to relay magnet frame 20 with cap screw 10. Install screws 17 to hold coil in place. Tighten alternately.

b. Install movable-contact fingers 9 into finger blocks 11 and 25 and install finger springs 24.

c. Slide finger shunt terminals 14 through holes in contact block 3. Secure shunt terminal to studs with terminal nuts 5.

d. Slide armature and finger block 11 into contact block 3.

e. Attach cross bar 1 to armature 15 with screws 16. Compress calibrating spring 2 and slide into place between spring seats.

f. Position contact block on relay frame. Lay coil leads in lead slots of terminal block. Install plate 25 and retainer strip 22. Insert cap screws 23 through retainer strip and

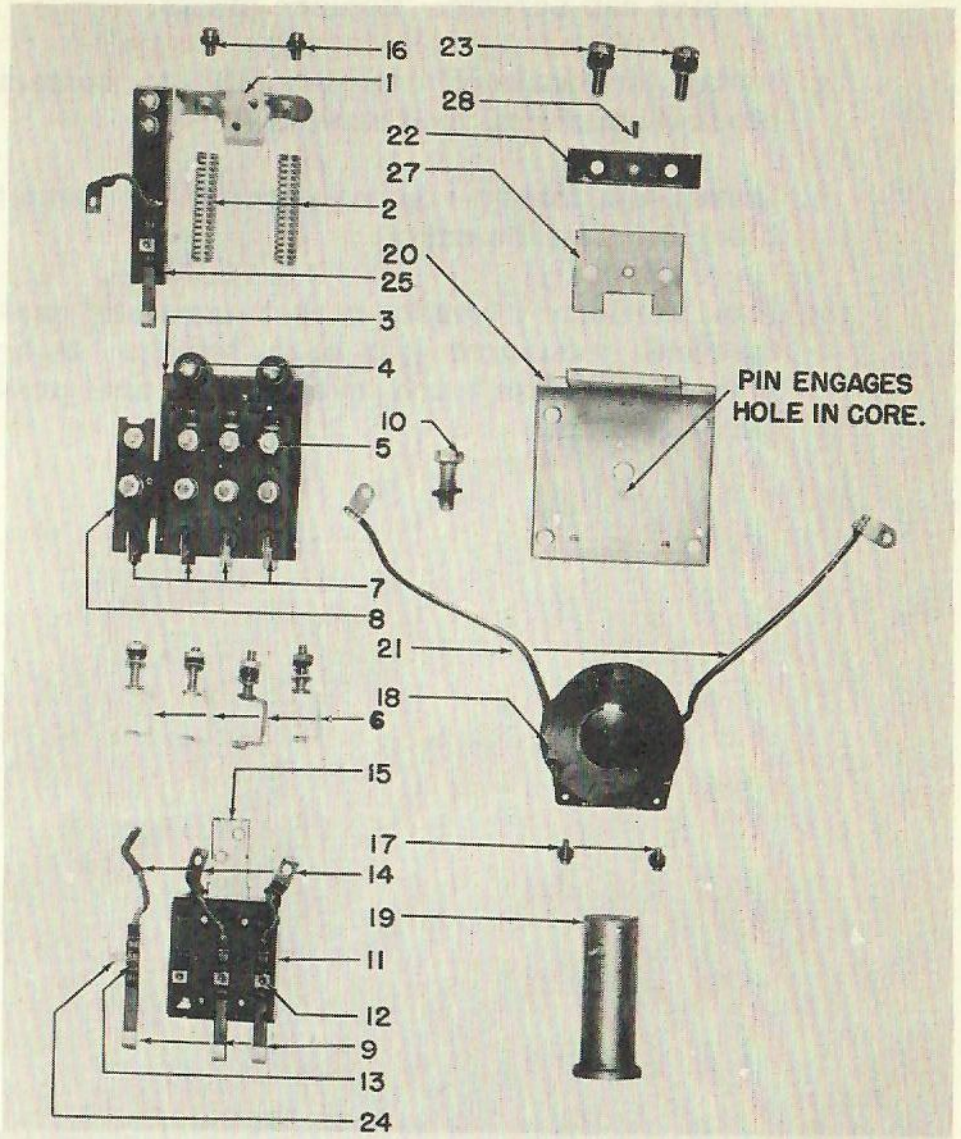

1. Cross bar
2. Calibrating springs
3. Contact block
4. Coil lead screws
5. Connection studs & nuts
6. Fixed contact
7. Contact slots
8. High-voltage barrier
9. Contact fingers
10. Cap screw
11. Finger block
12. Spring bracket
13. Spring seat
14. Finger connection-terminals
15. Armature
16. Armature screws and washers
17. Cap screws
18. Coil
19. Core
20. Magnet frame
21. Coil leads
22. Coil lead retainer
23. Cap screws
24. Finger spring
25. Finger block hi-voltage
26. Calibrating screws
27. Plate
28. Pin

Fig. 2-20
Disassembled, Type 17LV66J1, relay.

contact block to engage threads of relay frame. Tighten cap screws. Replace pin 28.

g. Install terminals of coil leads 21 to contact block 3 using coil lead screws 4.

h. Install stationary-contact studs 6 to contact block 3. Tighten nuts.

i. Bend stationary contact to set movable contact with armature gap of 1/8-inch. Make sure all contacts touch evenly and are properly aligned.

C. TYPE 17LV40D RELAY

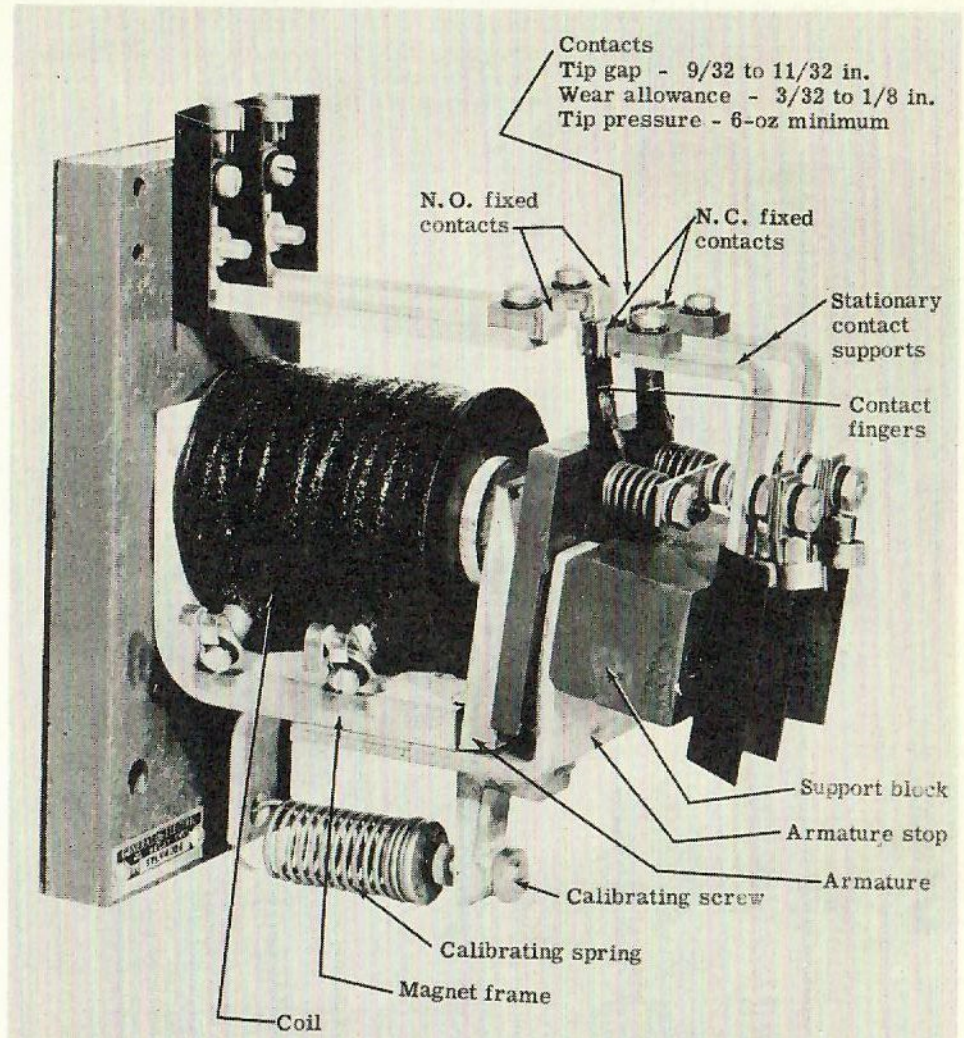

	Form D6	Form D21
Res. at 25 C	290 ohms	299 ohms
Pick-up current	0.13 amp	0.13 amp
Drop-out current	25% of pickup	25% of pickup

Fig. 3-20
Control relay, Type 17LV40D.

D. TYPE 17LV40H22 RELAY

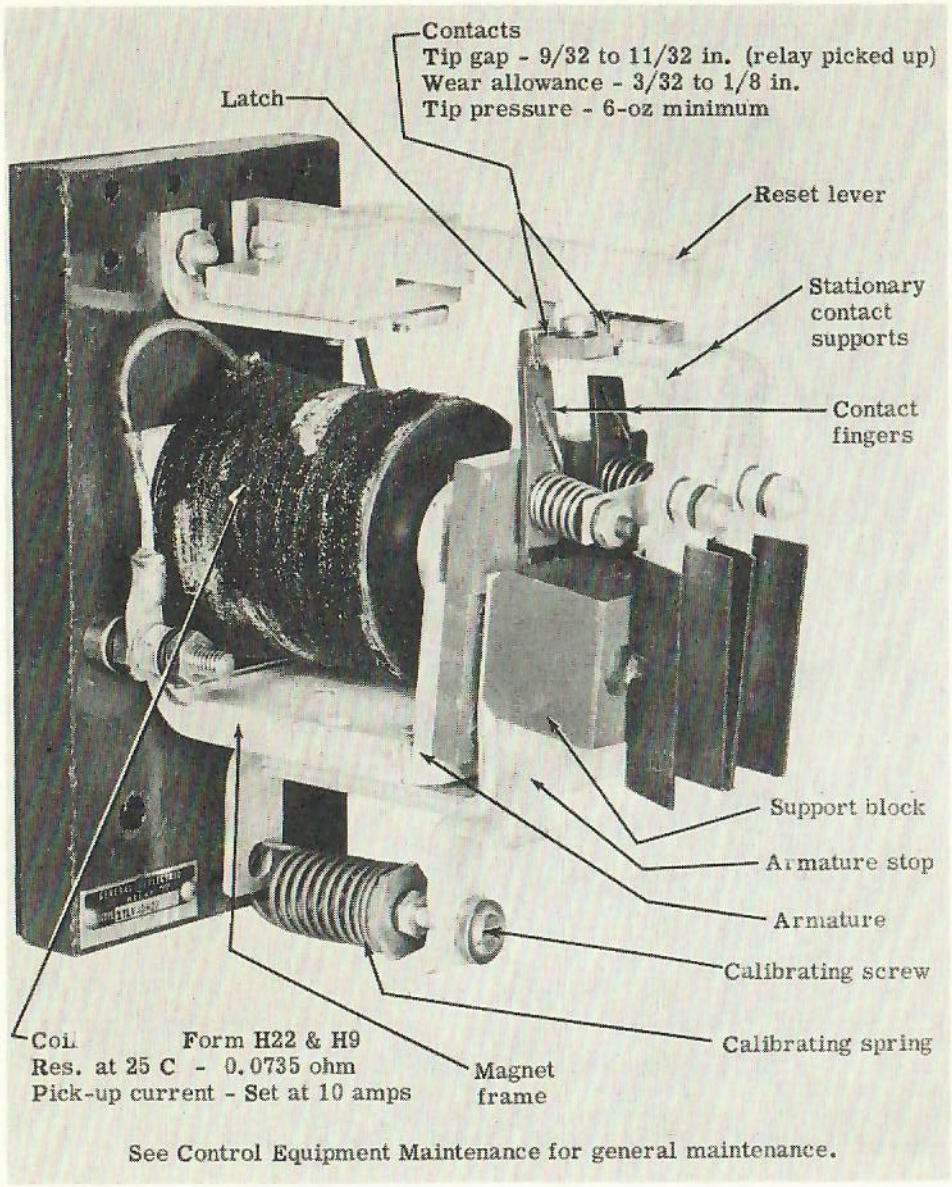

Fig. 4-20
Ground relay, Type 17LV40H22.

E. TYPE 17LS7C3 RELAY

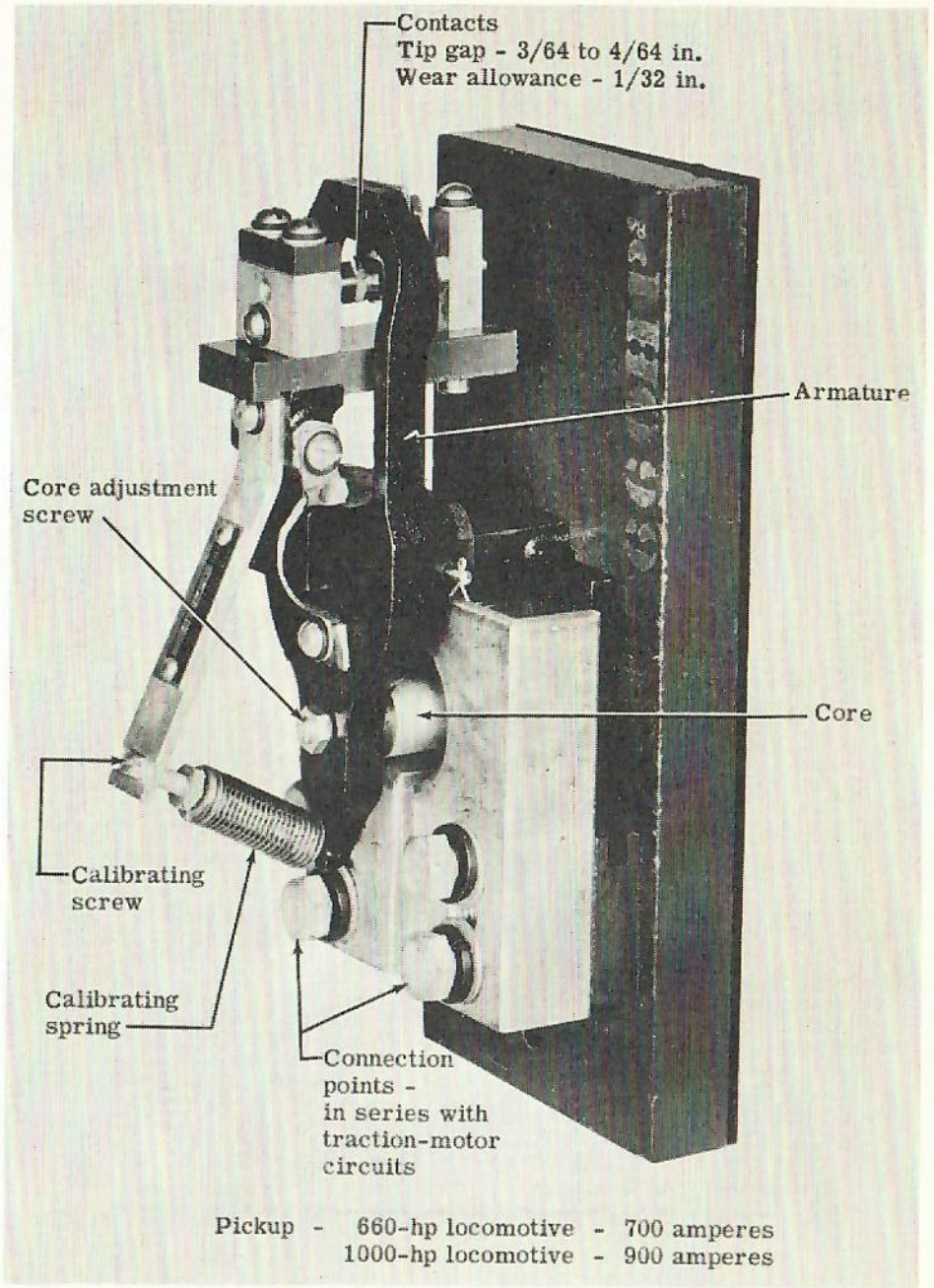

Fig. 5-20
Current limit signal relay, Type 17LS763.

F. TYPE 17LV24E1 RELAY

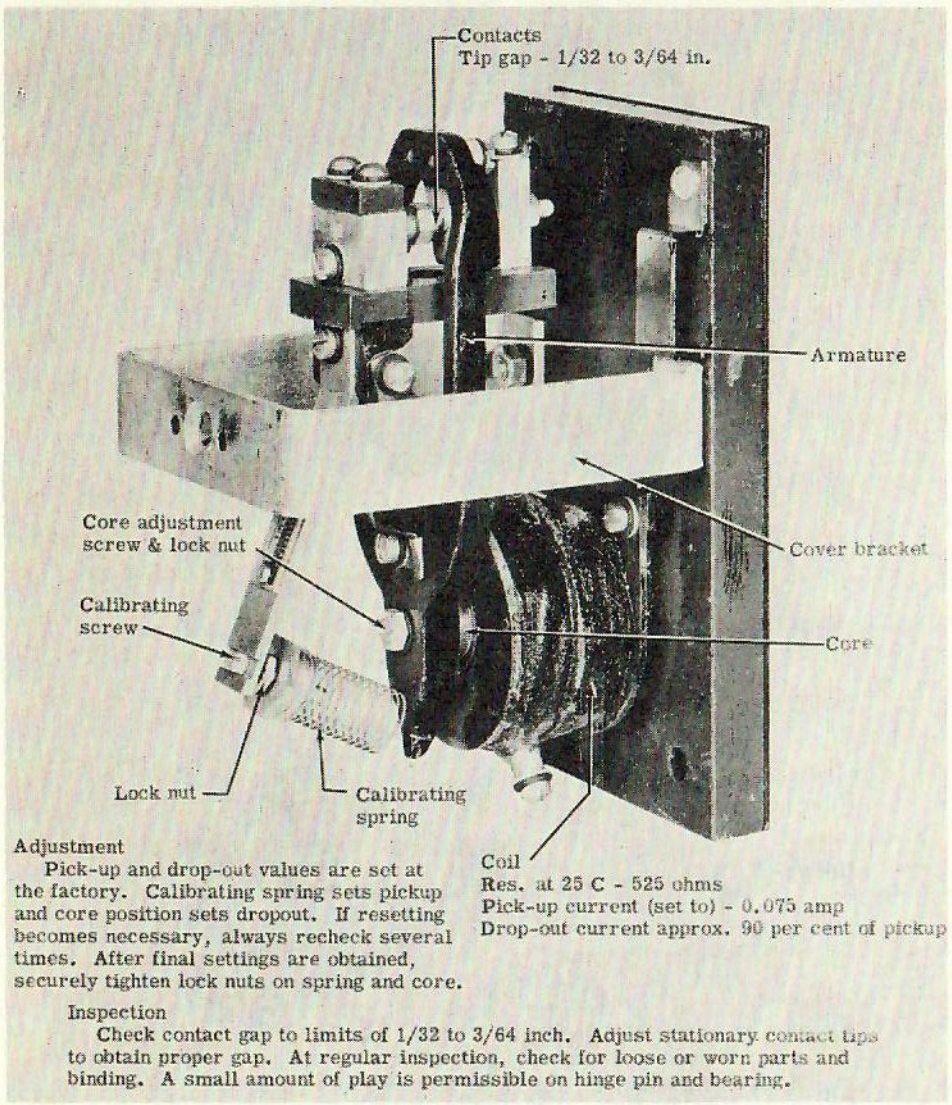

Fig. 6-20
Wheel-slipping signal relay, Type 17LV24E1.

G. TRACTION-MOTOR TRANSFER AND FIELD-SHUNTING CONTROL RELAY V, TYPE 17LC18E2

DATA

Contacts

Minimum Tip Gap . . . . . 1/16 in.
Minimum Tip Wear Allowance . . . . . 1/16 in.

Operating Coils	Shunt Coil	Series Coil
Res. at 25 C	550 ohms	1.41 ohms
Cat. No.	4739102	4739103

CALIBRATION

Mount relay with base vertical and armature compression spring below armature hinge pin (name plate at top) and proceed as follows:

1. Adjust lower core inward until finger insulation block is parallel with, and the same distance away from each coil. (Retract upper core if necessary). Bottom upper movable core into coil. Then back out each movable core two complete turns and lock with locking nut.

2. Adjust contact tips to have 1/16-inch wear allowance when upper plunger is held against its core (but armature to stop on core not on finger shield). The tip gap must be at least 1/16 inch.

3. Connect each operating coil to a suitable power supply, through individual adjustable resistors, making sure that polarity is same as shown on Fig. 7-20.

4. Adjust current in the series coil to 1.0 ampere and then adjust armature compression spring until relay picks up (closes its contacts) at 0.157 ampere in the shunt coil. With 1.26 amperes in the series

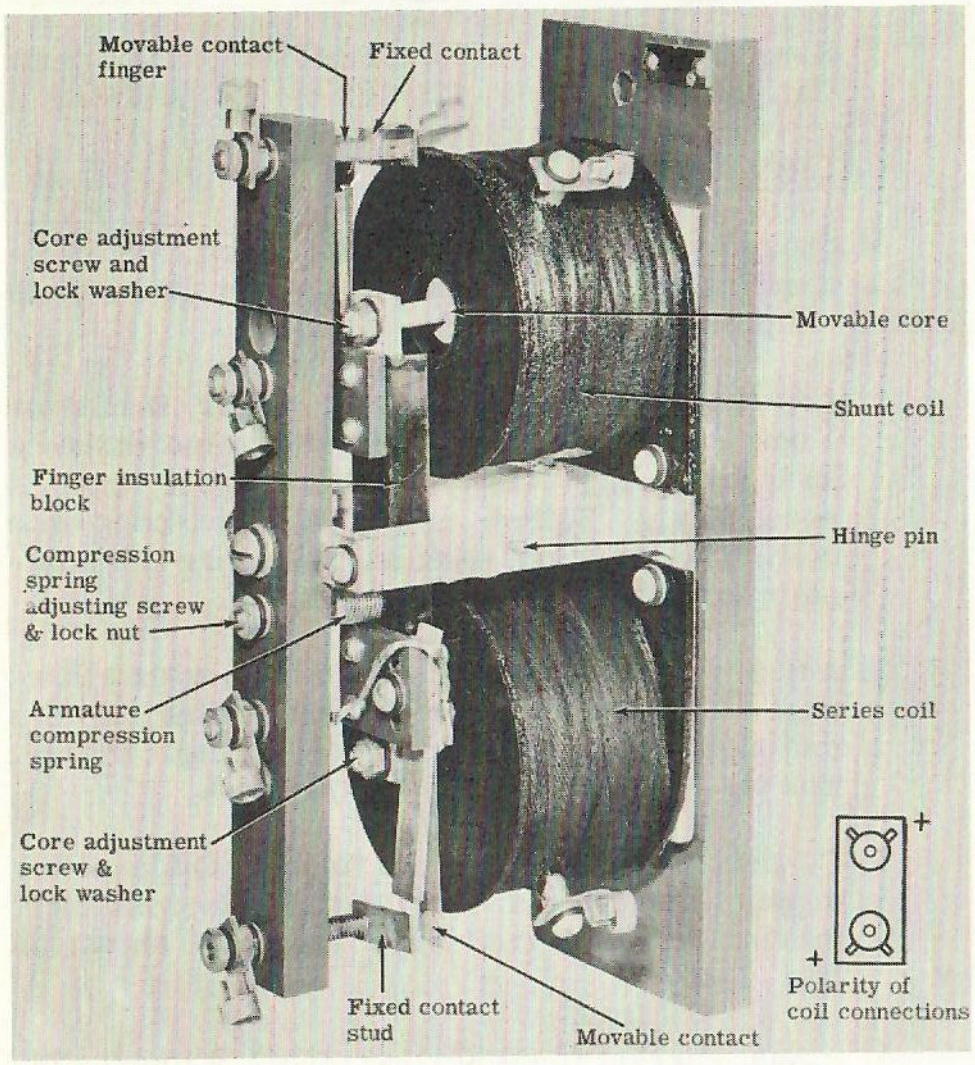

Fig. 7-20
Type 17LC18E2 relay.

coil, drop-out current must be 0.030 to 0.040 ampere in shunt coil. With relay set for the above pickup and dropout, relay should pick up with zero series-coil current at 0.052 to 0.058 ampere through shunt coil. Relay must also drop out with zero series-coil current on less than 0.020-ampere shunt current. If necessary adjust movable core slightly to obtain above settings. When any adjustment is made always recheck readings. No adjustment must reduce tip gap and wear allowance below 1/16 inch or cause relay armature to stop any place except on cores.

5. Check all adjustments to insure that all locking nuts are properly tightened.

MAINTENANCE

1. Check gap and wear allowance according to values under DATA.
2. See Section 13 for care of silver contacts.
3. Check resistance of coils according to values under DATA. Resistance must be within plus or minus 10 per cent at 25 C.
4. Operate relay manually to insure that armature is rèturned positively to its open position with the lower movable core striking coil bottom. A slight amount of play in the pivot is permissible but in no case must this be sufficient to permit movable cores to rub sides of coil.

H. VOLTAGE-REGULATING RELAYS

1. MECHANICAL

a. General

(1) Blow dirt off relay with clean, dry low-pressure (20 psi) compressed air.

(2) Remove grease with a suitable solvent.

b. Contact Fingers and Contact Bar

(1) Dress contact surfaces with a clean, fine mill or magneto-point file; remove burned spots and transferred metal. Do not file surfaces far enough to remove small craters.

(2) Install new contact-finger assemblies if following defects are encountered: (a) finger bent or bowed, (b) tip worn to 0.040-inch thick, (c) broken shunt or loose rivet. Do not mix worn and new fingers in the contact block; this causes incorrect sequence, erratic operation and sparking; sparking at a contact must not be any larger than the head of a common straight pin. Contact-tip thickness of different fingers must not vary more than 0.004 inch. See Finger Sequence.

(3) The contact bar must be flat; when contact surface of bar is held against a surface plate, a 0.004-inch (feeler) machinist's thickness gage must not pass between the bar and plate at any point.

(4) Finger Sequence

(a) Fingers must open from first to last and each pair must open before either contact of the next pair opens.

(5) Contact Gap and Wear Allowance

(a) Hold float coil inward against stop and use gap gage, Cat. 8835371G1 (Fig. 8-20), to check gaps. Adjust jack screws to obtain correct gap.

(b) Form 17LH22C1 and 27A1

1st Finger	
Gap	0.031 ± 0.010 in.
Wear Allow.	0.114 ± 0.010 in.
7th Finger	
Gap	0.114 ± 0.010 in.
Wear Allow.	0.031 ± 0.010 in.

(c) Correct gap provides correct wear allowance. Wear allowance is the distance the contact finger moves after initial contact.

c. Counterweight

(1) Install new knife-edge bearing if chipped or worn to 1/32-inch radius.

(2) Correct binding to provide free movement.

d. Cover

(1) Straighten and adjust to clear electrically-live and moving parts.

e. Mounting Bolts, Nuts, Studs and Fastenings

(1) Repair, tighten and install where necessary. (Loose parts are liable to cause shorting and erratic operation of relay).

2. ELECTRICAL

a. Adjustments

(1) Set voltage-control resistor slider to approximately correct value (90 per cent resistance).

(2) Install ammeter (0-1 ampere range) in series with shunt winding of voltage float coil.

(3) Install ammeter (0-10 ampere range) in series with generator shunt field.

(4) Install voltmeter (0-150 volt range) across generator output.

(5) With the generator running at a speed to give field current of 5.0 amperes, adjust the current in the float-shunt winding of the voltage float coil by using the calibrating springs. Set rear spring to obtain a full nut, then adjust front spring to obtain float-shunt amperes given under DATA. Set voltage with the voltage-control resistor slider. Allow relay and generator to warm up for 20 minutes, then check float-shunt current and voltage; readjust if necessary. Do not change the spring after setting the float-shunt current.

(6) Compounding

(a) Check voltage held over the speed range at corresponding field current given under DATA.

(b) If low voltage is held at low speed, increase compounding (stabilizing) resistance. If high voltage is held at low speed, reduce the compounding resistance. Compounding resistor is usually set at approximately 86 per cent resistance.

(c) There must be sufficient resistance left in the compounding circuit to adjust for 65 plus or minus 3 per cent volts with a cold field resistance of 10.78 ohms.

(d) Do not change setting of magnetic plug; this is a trimmer adjustment and is most effective at high speeds. If this plug is run in too far, it causes a voltage droop or instability at the high-speed end of the speed range. Adjustment of the voltage-control resistor moves the entire voltage curve up or down regardless of shape. The compounding (stabilizing) resistance affects the shape of the curve by increasing voltage at low speed. Proper compounding (holding voltage plus or minus 3 per cent of nominal) over the speed range can usually be obtained by adjusting only the voltage-control resistance and the compounding resistance.

(e) Current limit on Type 17LH27A1 relay

Do not increase current-limit setting over that set at factory and in no case increase above values given under DATA. To check current-limit setting have equipment running and maintaining normal regulation. Apply a light pressure to the floating coil to raise or lower the voltage and load. This causes current-limit coil to move up and the roller touches the yoke as load is increased. This current is approximately the cut-in or current-limit value.

b. Data

	Volts	Field Amp Range	Hot Field Ohms	Float Shunt Amps
17LH22C1	75±3%	0.75 - 5.00	14.3	0.40 to 0.50
17LH27A1	75±3%	0.758 - 5.00	14.3	0.61 to 0.68

17LH27A1 Current Limit - 67 amp ± 5% at idle speed
74 amp ± 5% at full speed

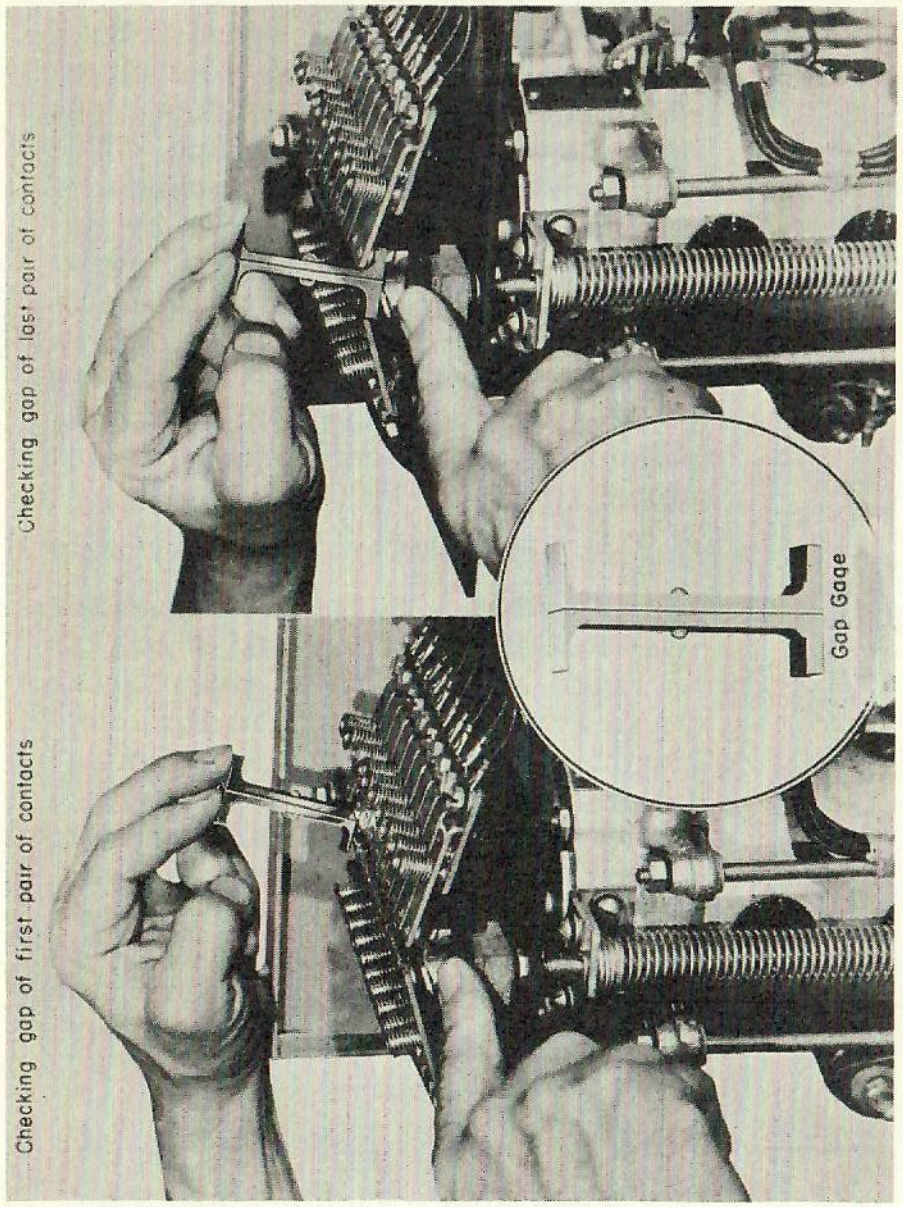

Fig. 8-20
Use of gap gage for checking gap of contacts.

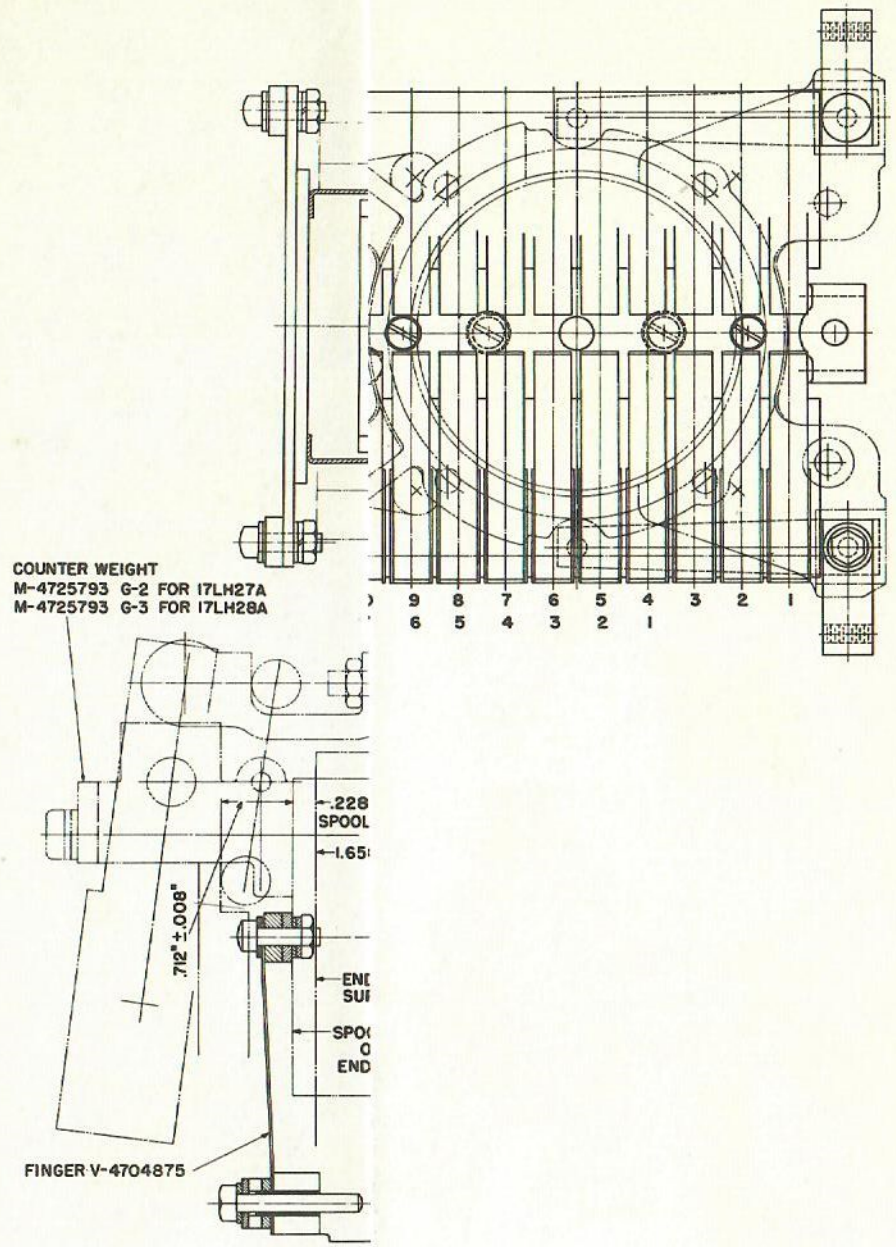

FORM 17LH	GA
27A	.031"±
28A	.031"±

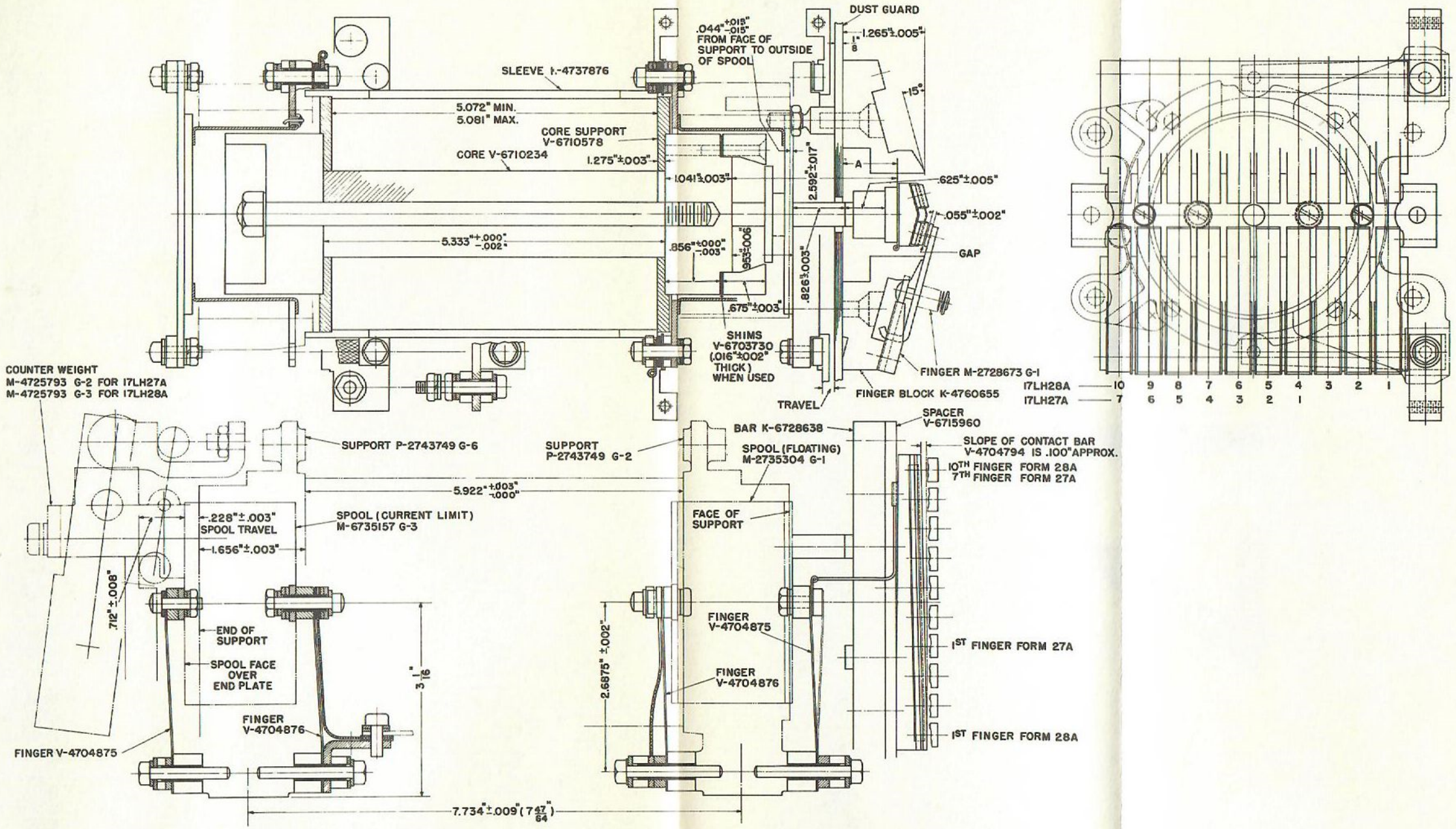

FORM 17LH	1ST FINGER		7TH FINGER		10TH FINGER		TOTAL CONTACT TRAVEL	A
	GAP	WIPE	GAP	WIPE	GAP	WIPE		
27A	.031"±.010"	.114"±.010"	.114"±.010"	.031"±.010"	——	——	.145"±.020"	.880"±.005"
28A	.031"±.010"	.156"±.010"	——	——	.156"±.010"	.031"±.010"	.187"±.020"	.841"±.005"

Fig. 9-20
Layout for gap, wipe and travel of contacts.

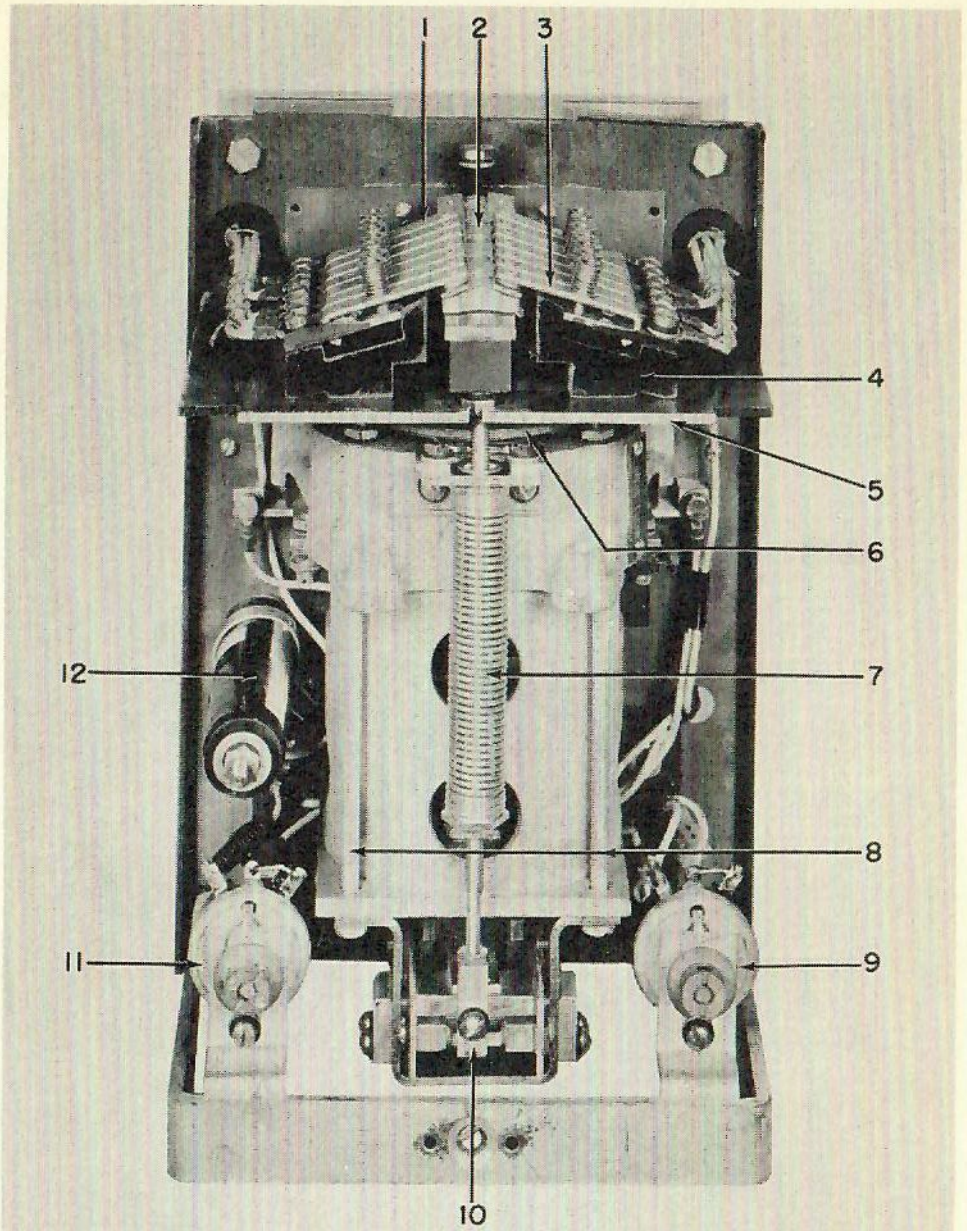

1. Contact finger #1
2. Contact bar
3. Contact finger #7
4. Contact-finger block
5. Dust guard
6. Floating coil
7. Calibrating spring
8. Tie rods
9. High-speed rheostat
10. Counterweight assembly
11. Idle-speed rheostat
12. Stabilizing resistor

Fig. 10-20
Voltage Control Relay, Type 17LH22C1

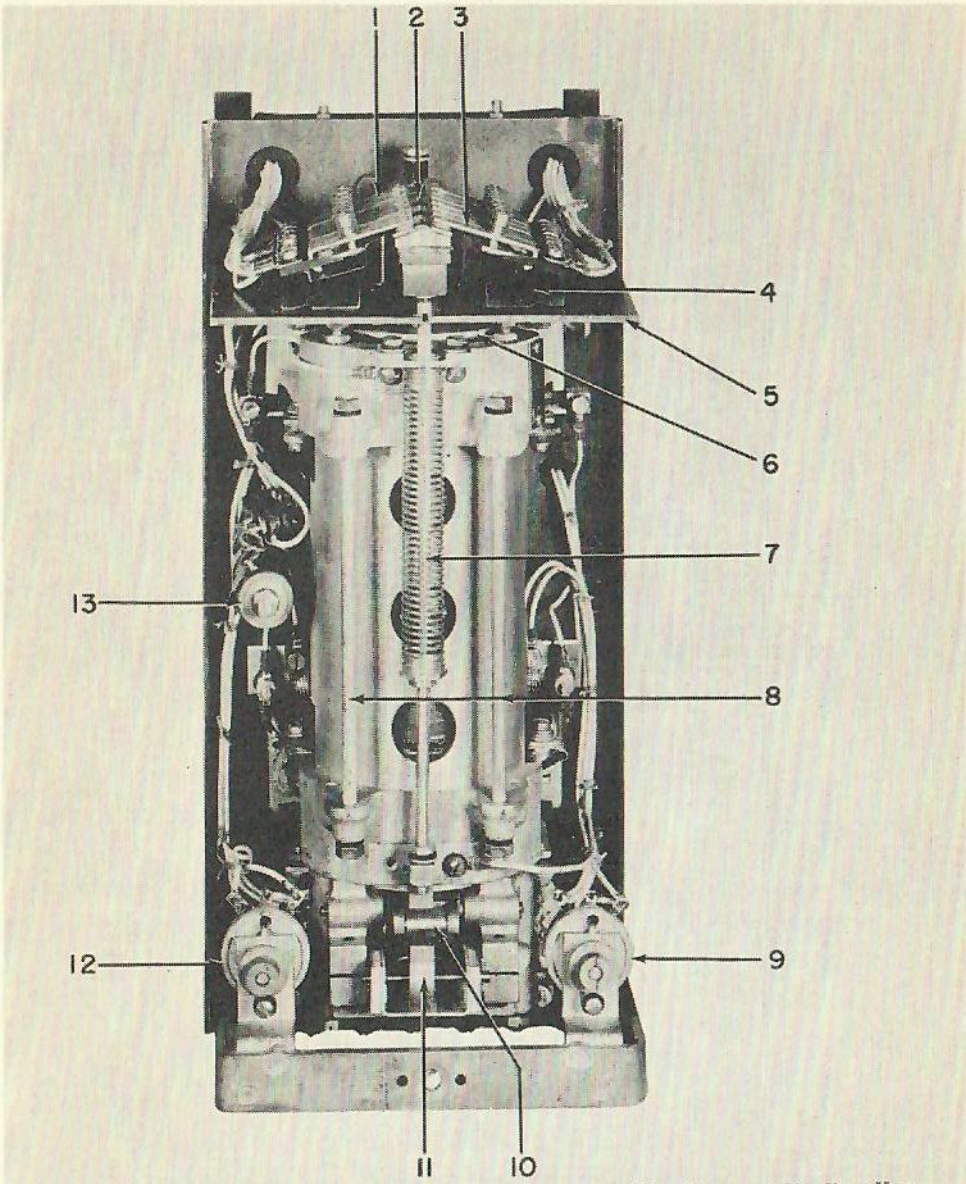

1. Contact finger #1
2. Contact bar
3. Contact finger #7
4. Contact-finger block
5. Dust guard
6. Floating coil
7. Calibrating spring
8. Tie rods
9. High-speed rheostat
10. Current-limit roller
11. Counterweight assembly
12. Idle-speed rheostat
13. Stabilizing resistor

Fig. 11-20
Voltage Control Relay, Type 17LH27A1

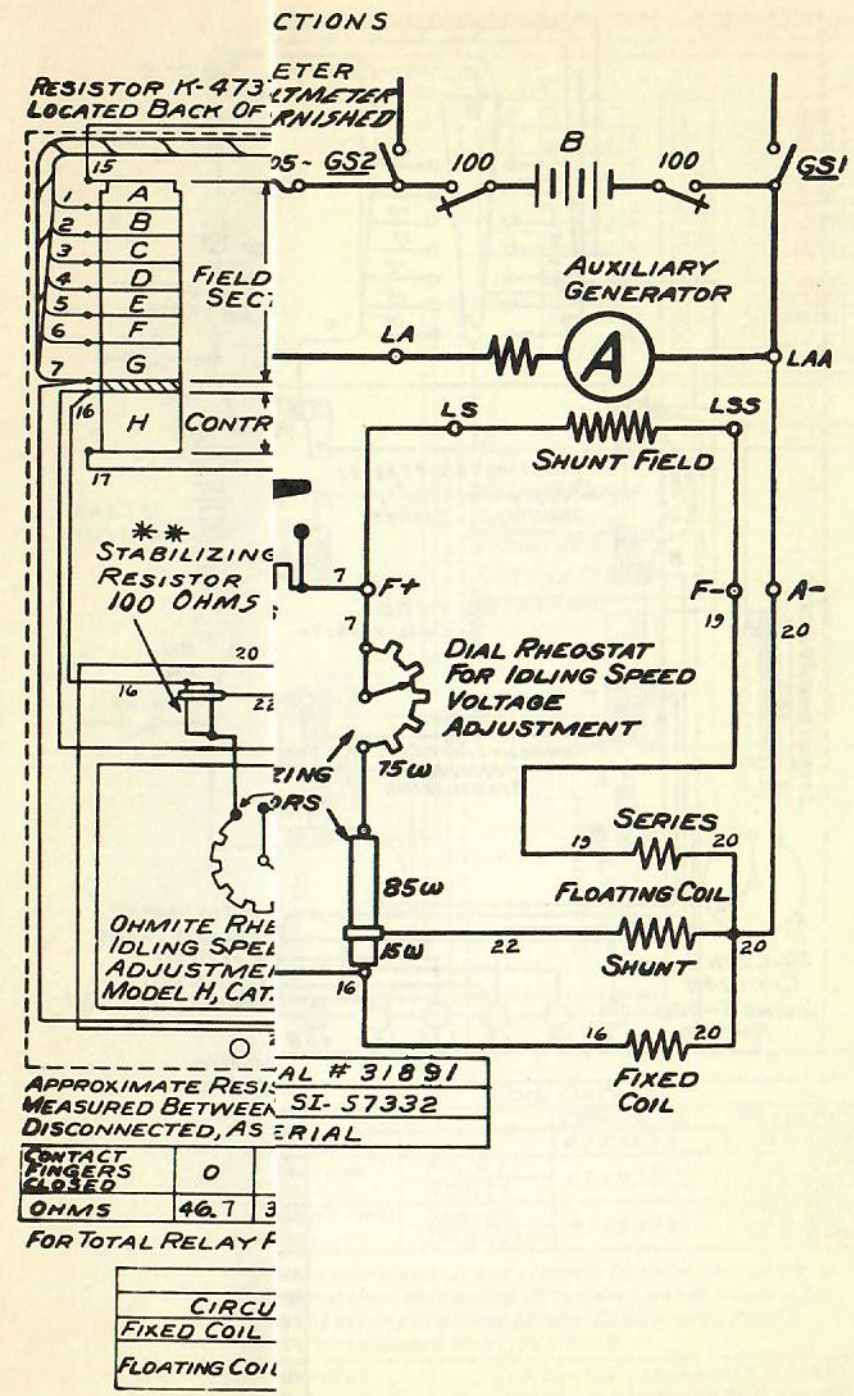

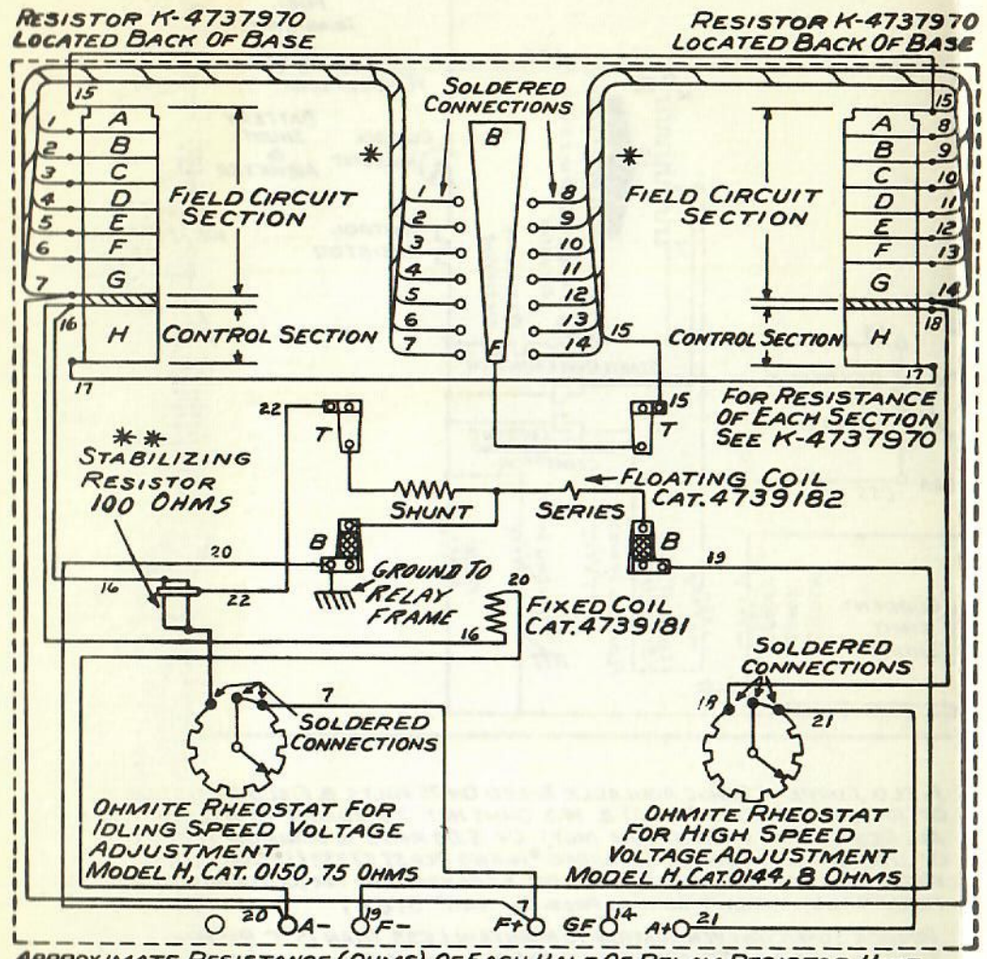

APPROXIMATE RESISTANCE (OHMS) OF EACH HALF OF RELAY RESISTOR UNIT, MEASURED BETWEEN CONTACT BAR & TERMINAL GF (OR F+) WITH EXTERNAL LEADS DISCONNECTED, AS SUCCESSIVE CONTACT FINGERS CLOSE ON THE CONTACT BAR.

CONTACT FINGERS CLOSED	0	1 8	1 TO 2 8 TO 9	1 TO 3 9 TO 10	1 TO 4 8 TO 11	1 TO 5 8 TO 12	1 TO 6 8 TO 13	1 TO 7 8 TO 14	H		
OHMS	46.7	32.7	22.4	14.8	9.26	5.33	2.28	0	18.45		

FOR TOTAL RELAY RESISTANCE, MULTIPLY ABOVE VALUES BY 2.

COIL DATA			
CIRCUIT		CATALOG NO.	RES. AT 25°C.
FIXED COIL		4739181	10.15
FLOATING COIL	SHUNT	4739182	14.
	SERIES		0.268

SCHEMATIC CONNECTIONS

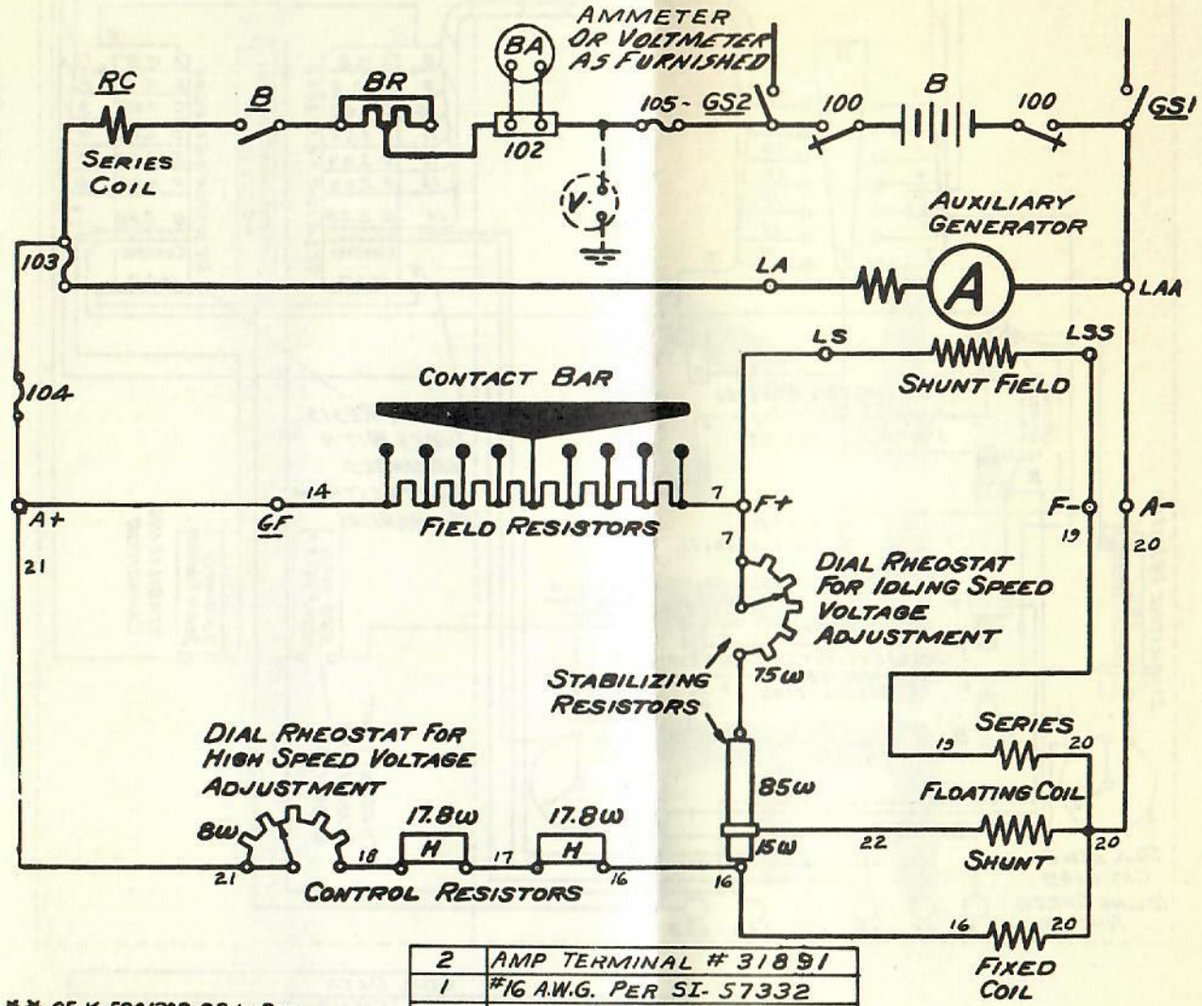

2	AMP TERMINAL # 31891
1	#16 A.W.G. PER SI-57332
PT.	MATERIAL

** QF-K-5901208-G2 IN BACK OF BASE ON RELAYS PRIOR TO JULY 1941 WITH COMPOUND BASE. QL-K-5901245-G2 IN FRONT OF BASE ON RELAYS AFTER JULY 1941 WITH METAL BASE.

WHERE CABLES PASS THROUGH METAL BASE ADD SUPPLEMENTARY INSULATION AS FOLLOWS: 2 WRAPS OF 1/2 LAP VARNISHED CAMBRIC, 1 WRAP OF 1/2 LAP FRICTION TAPE, 1 WRAP OF THIN FIBER

Fig. 12-20
Connection diagram for Type 17LH22C1 relay.

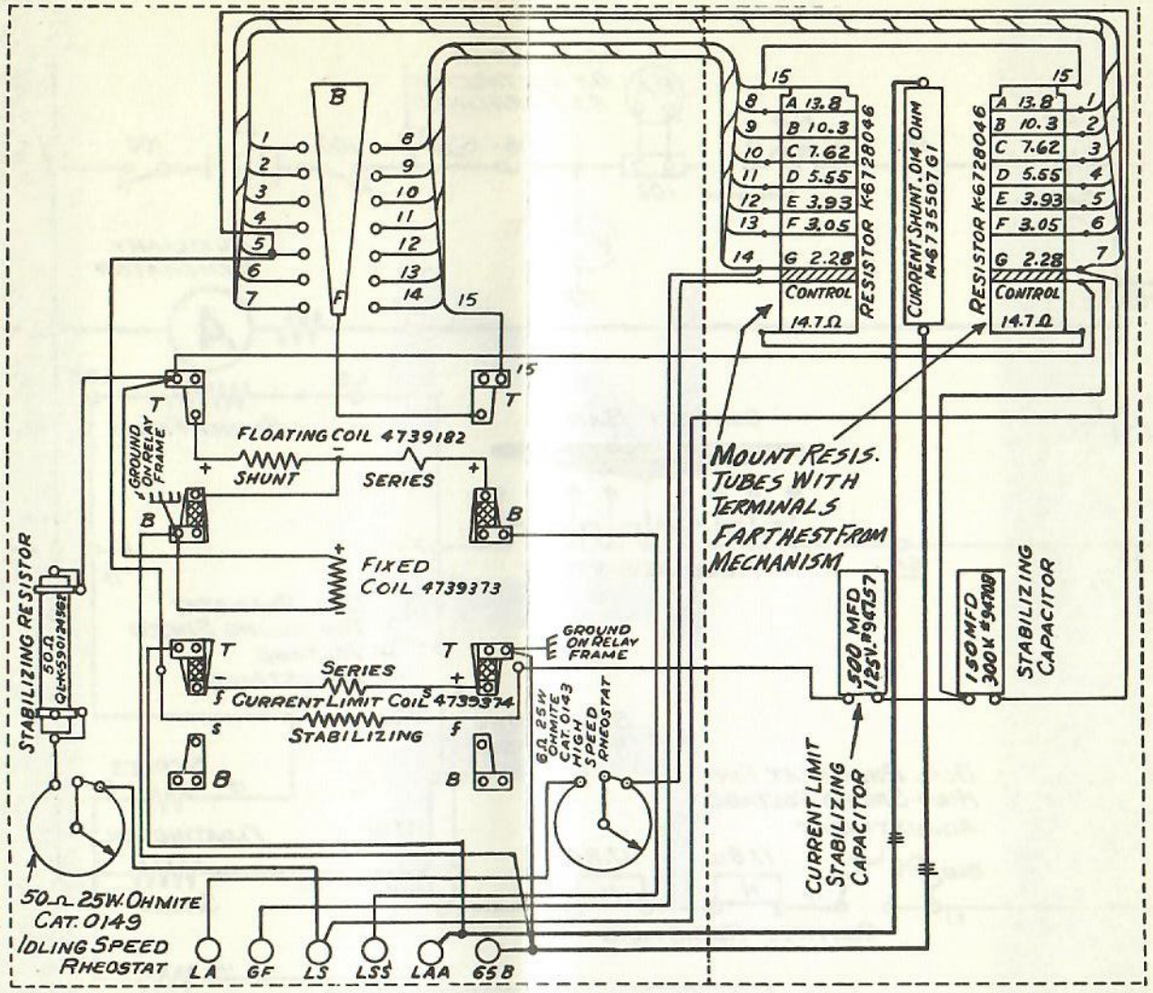

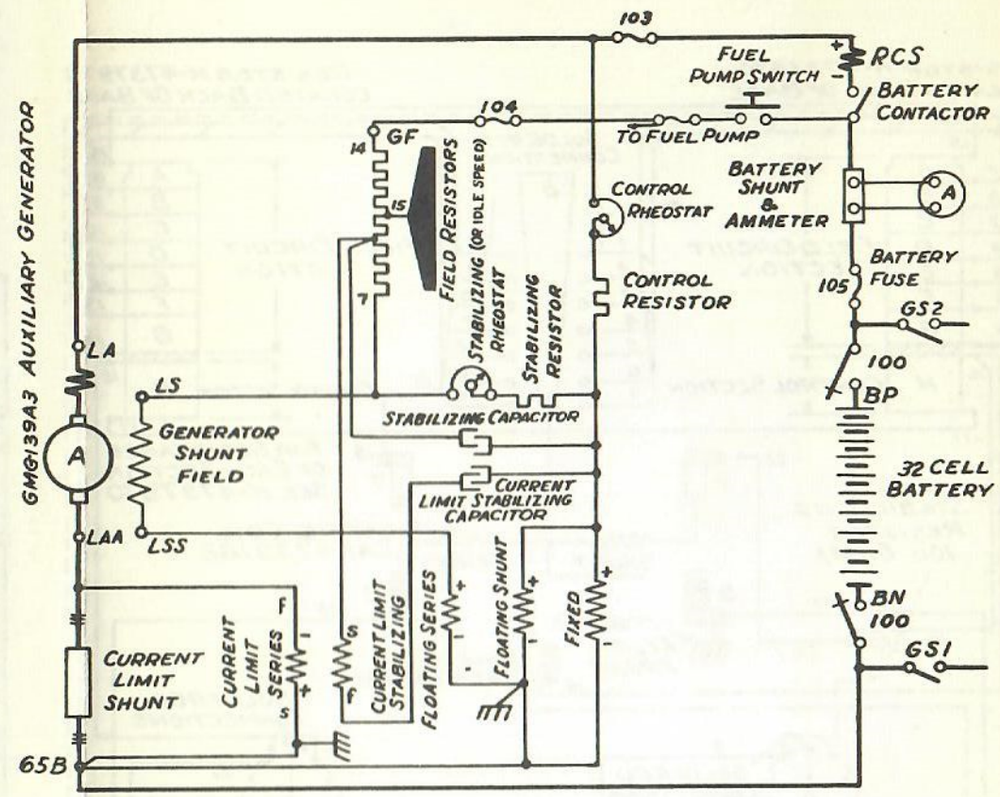

FIELD CURRENT RANGE AVAILABLE BASED ON 75 VOLTS & FIELD RESISTANCE OF 10.78 OHMS COLD (25°C) & 14.3 OHMS HOT. TOLERANCE OF ±8% & ±5% ON ALL RESISTANCES. MAXIMUM (HOT) OF 5.00 AMPS. & MINIMUM (COLD) OF .758 AMPS. ALL WIRES STRANDED #16 AWG PER SI 57332 (19/.011) EXCEPT WIRES MARKED ⊣⊢ WHICH SHALL BE STRANDED #4 PER SI-Y-57001-C (7/.0772) TERMINALS, AIRCRAFT-MARINE PROD. CO. AMP 31891

PROVIDE SUFFICIENT VENTILATION TO MAINTAIN LESS THAN 15°C RISE IN SURROUNDING AIR TEMPERATURE ABOVE AMBIENT TEMPERATURE. RELAY, RESISTORS, & COILS DISSIPATE APPROX. 560 WATTS MAXIMUM

COIL DATA

COIL		CATALOG NO.	RESISTANCE
FIXED		4739373	7.42 OHMS
FLOATING COIL	SHUNT	4739182	14.0 OHMS
	SERIES		.268 OHMS
CURRENT LIMIT COIL	SERIES	4739374	.0765 OHMS
	STABILIZING		36.7 OHMS

APPROXIMATE RESISTANCE (OHMS) OF EACH HALF OF FIELD RESISTOR UNIT MEASURED BETWEEN CONTACT BAR & GF (OR LS) WITH EXTERNAL LEADS DISCONNECTED. FOR TOTAL OHMS MULTIPLY BY 2

CONTACTS CLOSED	0	1 8	1 TO 2 8 TO 9	1 TO 3 8 TO 10	1 TO 4 8 TO 11	1 TO 5 8 TO 12	1 TO 6 8 TO 13	1 TO 7 8 TO 14
OHMS	46.53	32.73	22.43	14.81	9.26	5.33	2.28	0

Fig. 13-20
Connection diagram for Type 17LH27A1 relay.

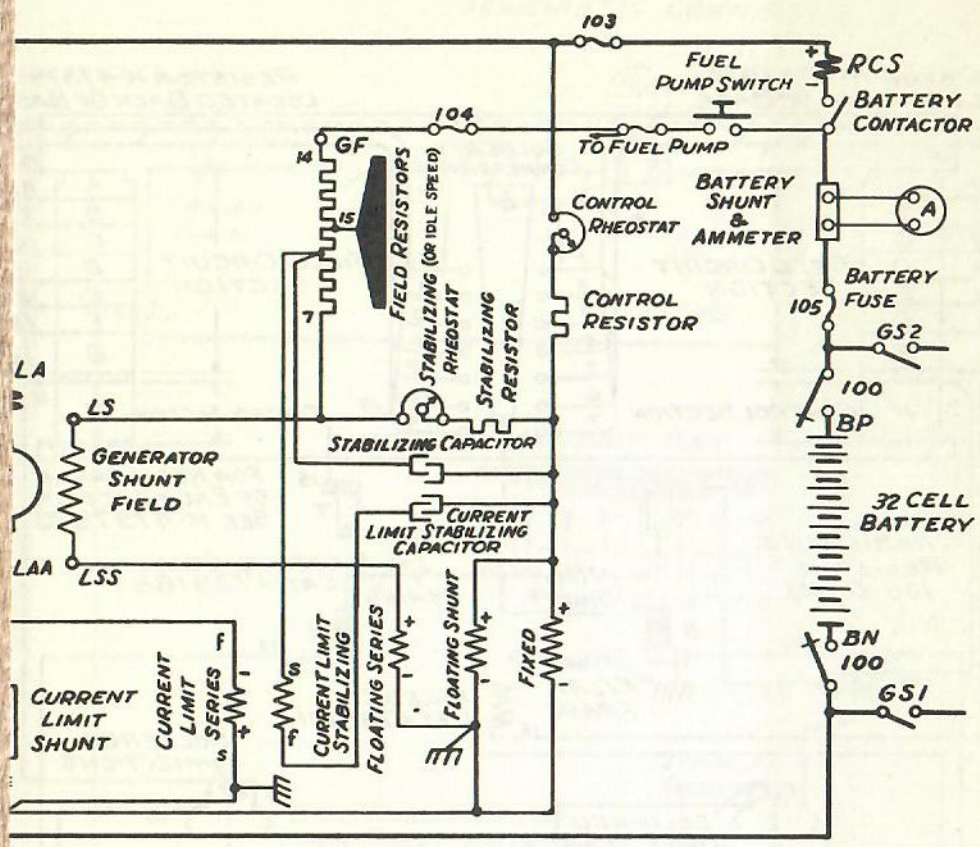

FIELD CURRENT RANGE AVAILABLE BASED ON 75 VOLTS & FIELD RESISTANCE OF 10.78 OHMS COLD (25°C) & 14.3 OHMS HOT. TOLERANCE OF +8% & -5% ON ALL RESISTANCES. MAXIMUM (HOT) OF 5.00 AMPS. & MINIMUM (COLD) OF .758 AMPS. ALL WIRES STRANDED #16 AWG PER SI 57332 (19/.011) EXCEPT WIRES MARKED -#- WHICH SHALL BE STRANDED #4 PER SI-Y-57001-C (7/.0772) TERMINALS, AIRCRAFT-MARINE PROD. CO. AMP 31891

PROVIDE SUFFICIENT VENTILATION TO MAINTAIN LESS THAN 15°C RISE IN SURROUNDING AIR TEMPERATURE ABOVE AMBIENT TEMPERATURE. RELAY, RESISTORS, & COILS DISSIPATE APPROX. 560 WATTS MAXIMUM

.H27A1 relay.

I. TYPE 17LE51A1 RELAY EQUIPMENT

1. TYPE 17LV53C901 RELAY
(Mounted on Equipment Panel)

a. Data

Tip Gap	1/32 in.
Wear Allowance	1/32 in.
Tip Pressure	50 grams
Coil Resistance	762 ohms
Pick-up Current	0.053 amp
Dropout	20 to 40 per cent of pickup

Relay has four double-throw contacts.

b. Maintenance

See CONTROL EQUIPMENT MAINTENANCE, Section 13.

c. Disassembly

See Fig. 15-20.

(1) Scribe or paint a diagonal line across contact blocks, (see Fig. 17-20) spacers and armature-stop assembly to insure correct sequence and alignment in reassembly.

(2) Remove counterweight 18 by removing screw 16.

(3) Remove calibrating screw 17 by using stiff piano wire about 0.060-inch diameter bent into a hook with a loop handle. Unscrew until enough tension is removed to unhook spring 22.

(4) Remove two screws 14 holding movable-contact finger-block assembly 10 to armature.

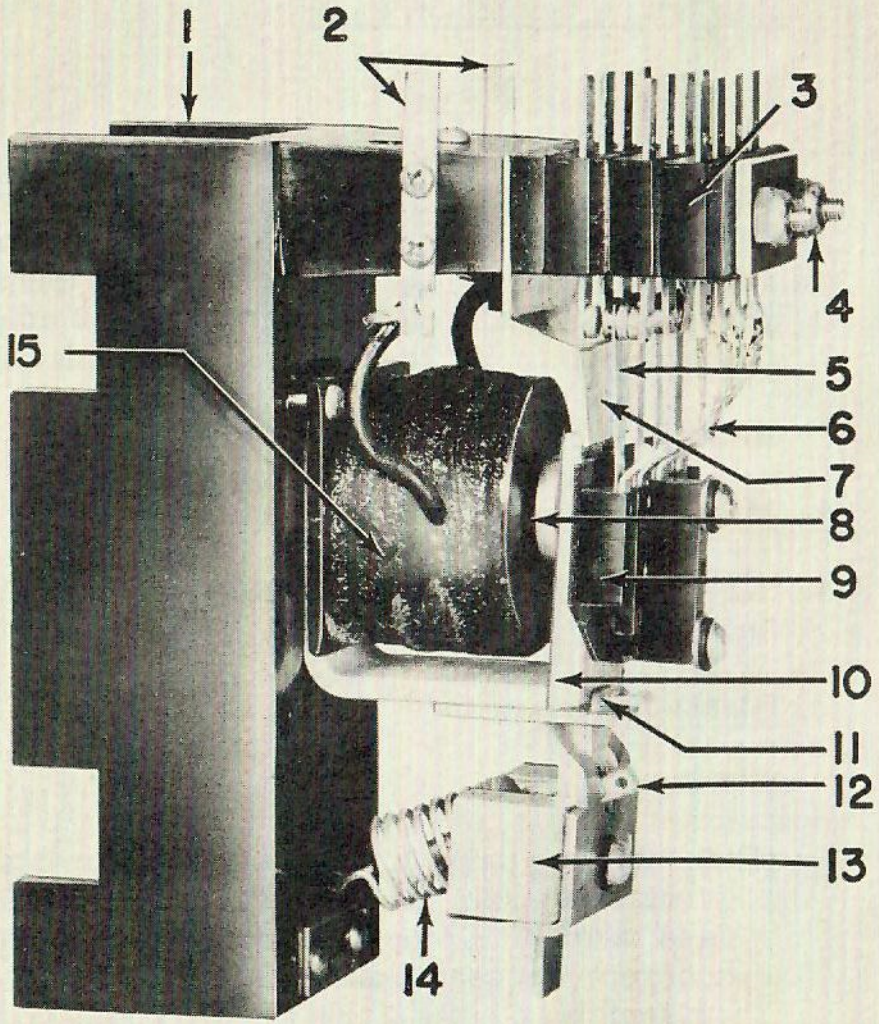

1. Base
2. Coil connections
3. Stationary contact blocks
4. Self-locking nut
5. Moving contact finger
6. Shunts
7. Armature stop
8. Core
9. Moving finger block
10. Armature
11. Retainer
12. Calibrating screw
13. Counterweight
14. Calibrating spring
15. Coil

Fig. 14-20
Type 17LV53 relay.

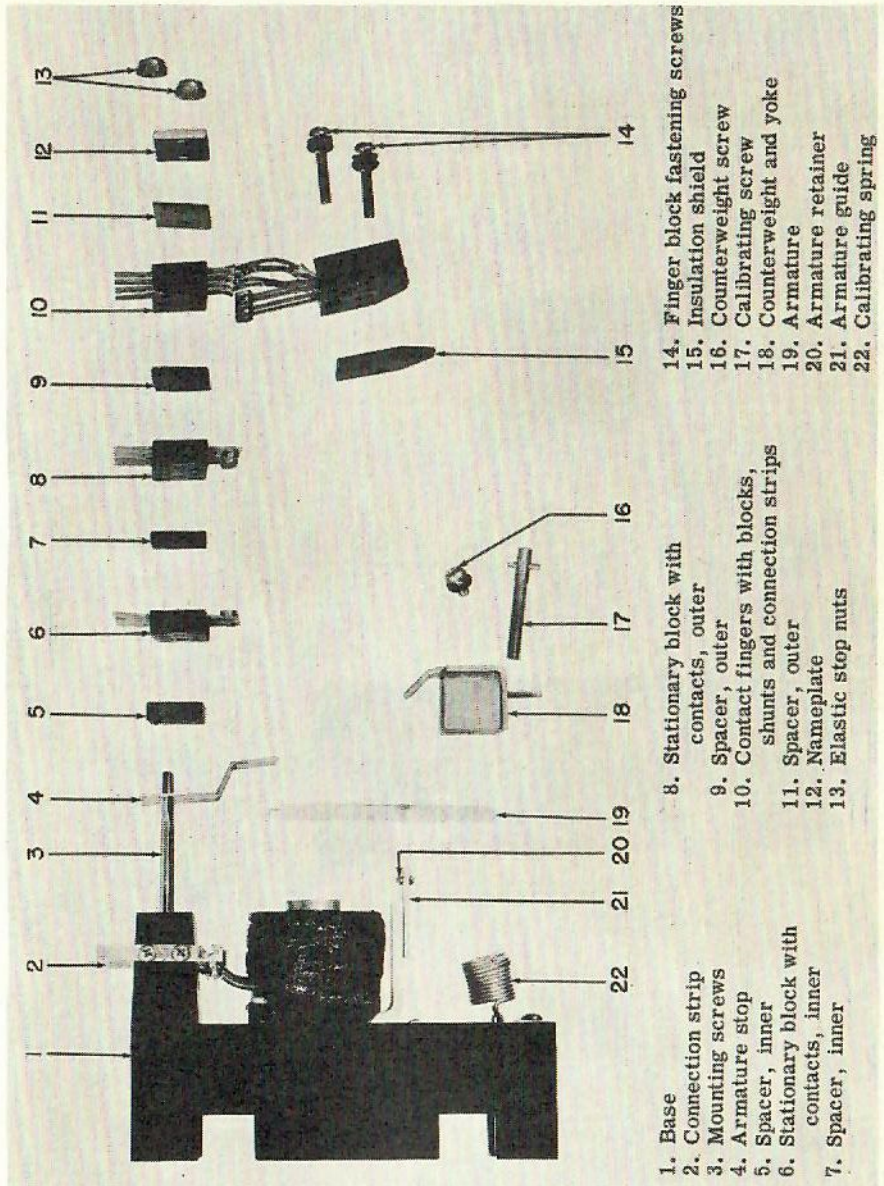

1. Base
2. Connection strip
3. Mounting screws
4. Armature stop
5. Spacer, inner
6. Stationary block with contacts, inner
7. Spacer, inner
8. Stationary block with contacts, outer
9. Spacer, outer
10. Contact fingers with blocks, shunts and connection strips
11. Spacer, outer
12. Nameplate
13. Elastic stop nuts
14. Finger block fastening screws
15. Insulation shield
16. Counterweight screw
17. Calibrating screw
18. Counterweight and yoke
19. Armature
20. Armature retainer
21. Armature guide
22. Calibrating spring

Fig. 15-20
Disassembled relay, Type 17LV53.

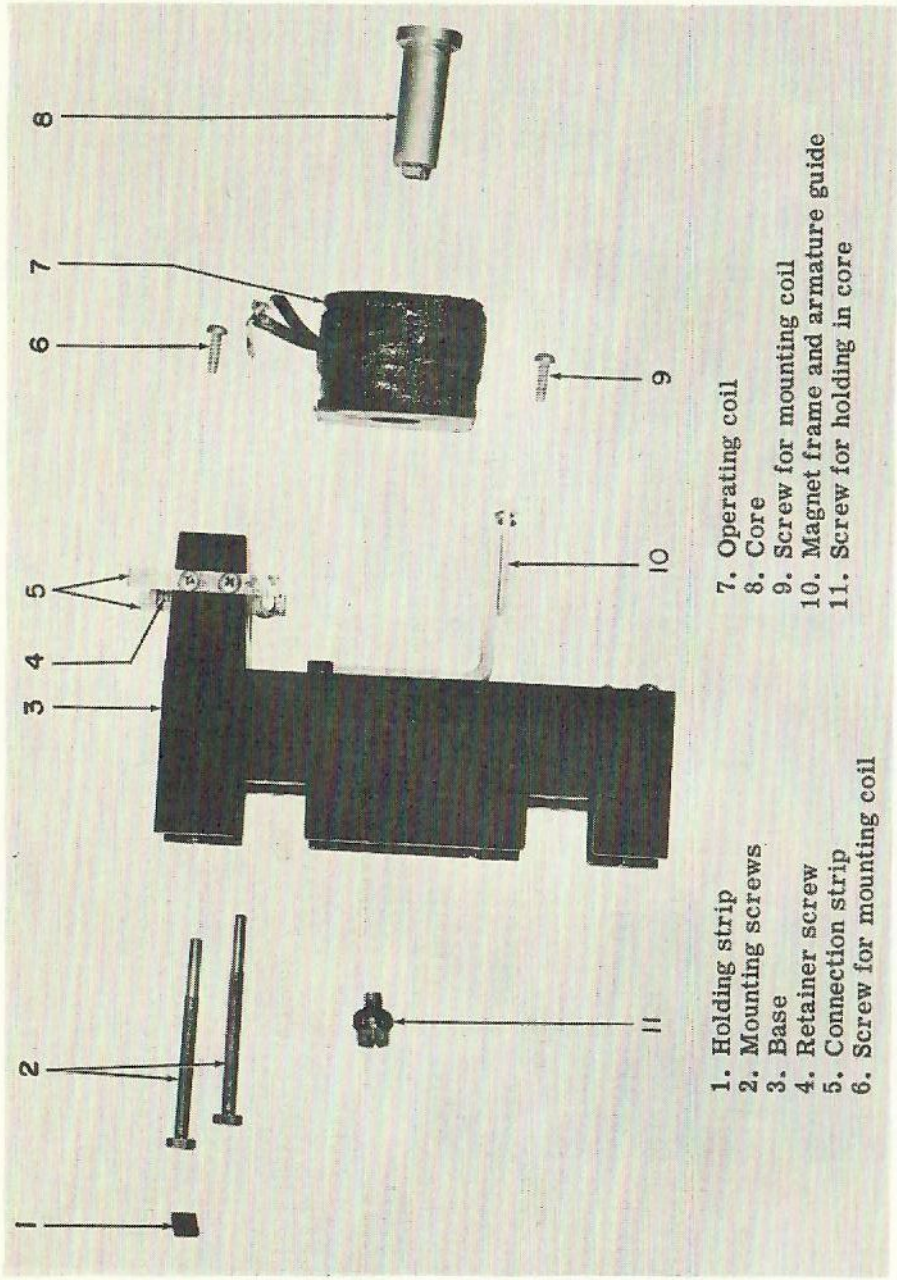

1. Holding strip
2. Mounting screws
3. Base
4. Retainer screw
5. Connection strip
6. Screw for mounting coil
7. Operating coil
8. Core
9. Screw for mounting coil
10. Magnet frame and armature guide
11. Screw for holding in core

Fig. 16-20
Disassembled relay, Type 17LV53.

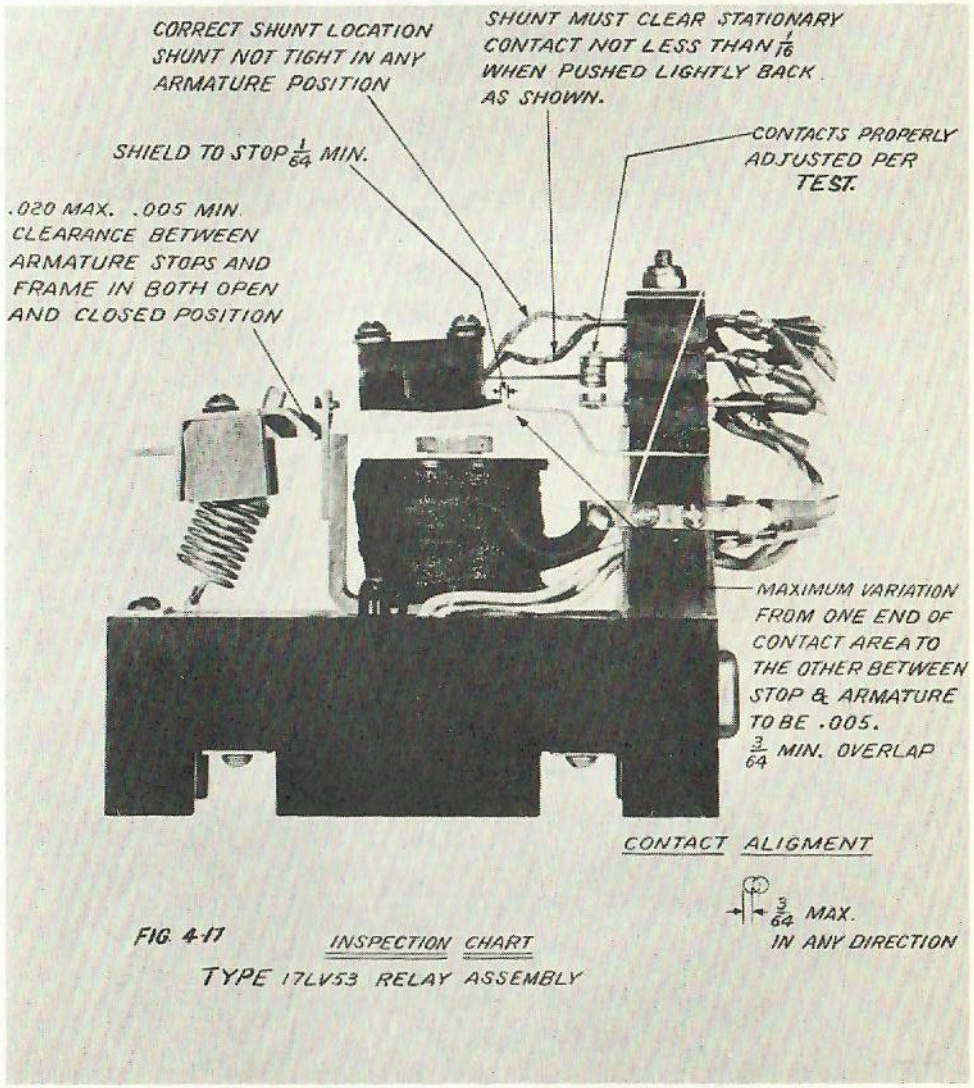

Fig. 17-20
Inspection chart for relay.

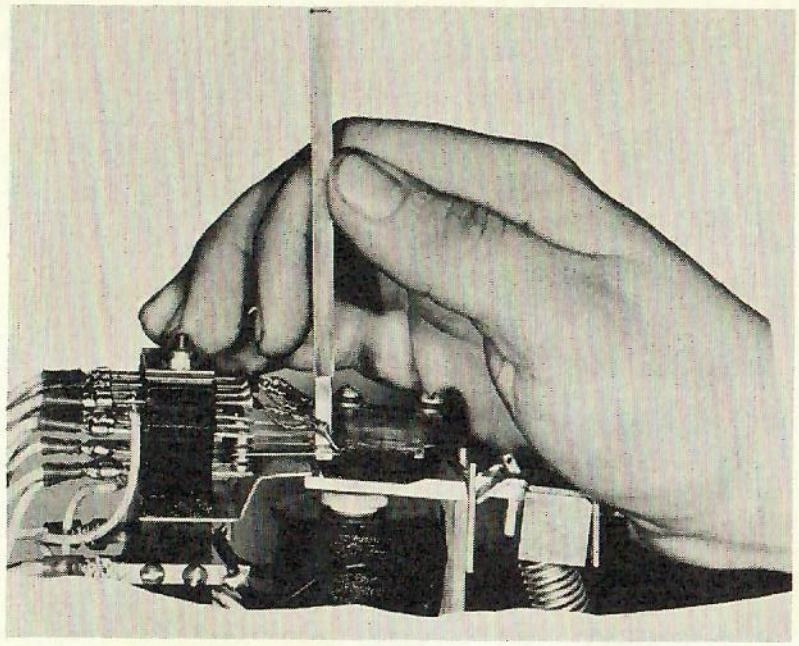

Fig. 18-20
Adjusting fixed contacts using tool, Cat. 8862135.

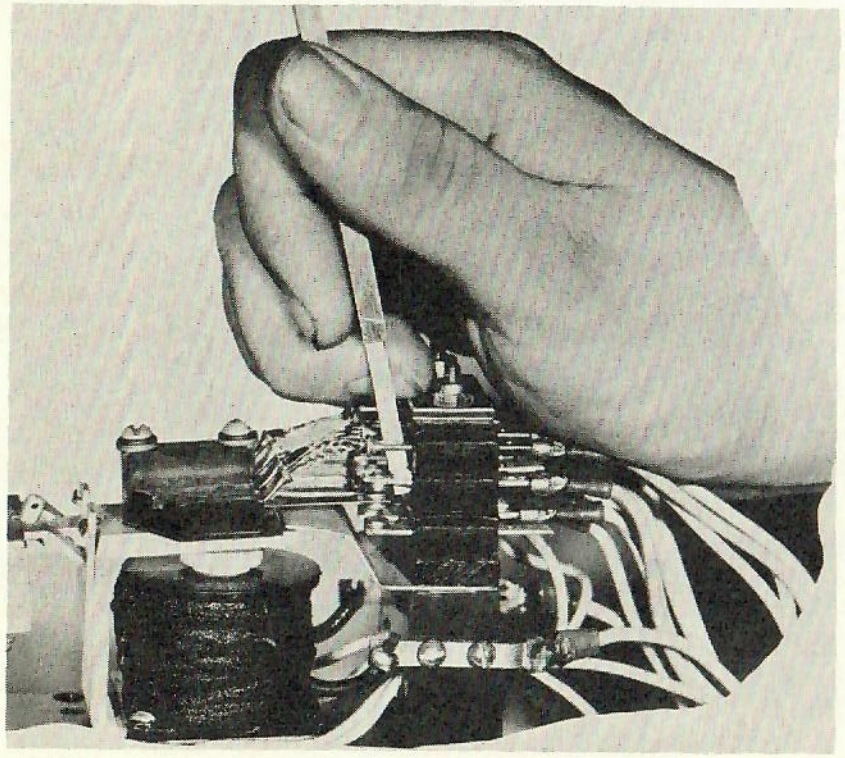

Fig. 19-20
Adjusting movable contacts using tool, Cat. 8862135.

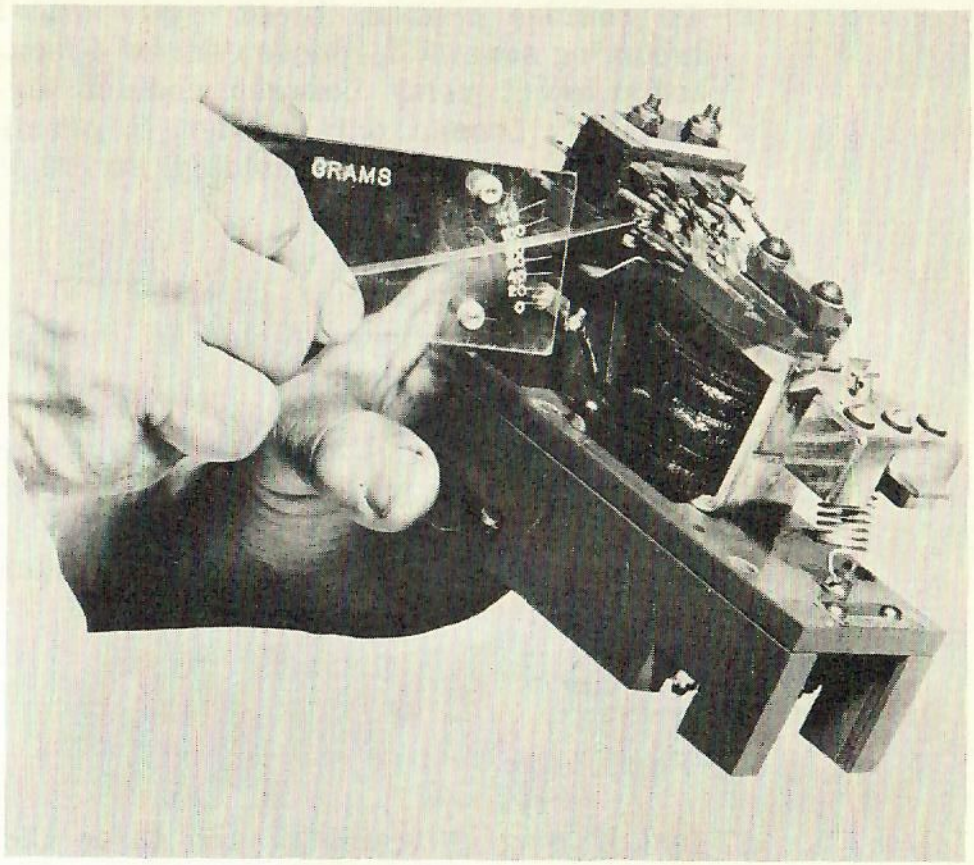

Fig. 20-20
Method of measuring contact-tip pressure, Type 17LV53 relays.

(5) Remove two elastic stop nuts 13 holding contact blocks and spacers in place.

(6) Remove nameplate 12, contact blocks 6, 8, 10, spacers 5, 7, 9, 11, and armature stop 4 from mounting screw 3.

See Fig. 16-20.

(1) Slip armature 19 through armature guide.

NOTE: Do not remove armature retainer 20, Fig. 15-20.

(2) To remove contact block and spacer mounting screws 3, loosen screw 4 located at top of relay between contact terminals. Loosen only enough to permit mounting screws 3 and holding strip 1 to drop out.

(3) Unsolder coil leads.

(4) Remove two screws 6 and 9, holding operating coil in place.

(5) Remove core 8 and operating coil 7 by removing screw 11 from bottom of relay.

(6) Remove magnet frame 10 by removing three flat-head screws.

d. Reassembly

See Fig. 16-20.

(1) Install magnet frame 10 and three CSH screws holding it to base.

(2) Insert core 8 into operating coil 7 and install on base with screw 11.

(3) Install screws 9 holding operating coil in place.

(4) Insert mounting screws 2 and holding strip 1 in base 3 and tighten retainer screw 4.

See Fig. 15-20.

(1) Slide armature 19 through armature guide 21.

(2) Install armature stop spacer, contact blocks and nameplate over mounting screws 3 as shown on Fig. 15-20. Check marking on side for correct positions of these parts. Tighten elastic stop nuts 13.

(3) Install movable-contact finger-block assembly 10 and spacer 15 on armature 19 with the two screws 14.

(4) Insert calibrating screw 17 and spring 22; turn screw 17 to slightly stretch spring.

(5) Assemble counterweight 18 with screw 16.

Test and adjust according to instructions under Adjustments.

e. Adjustments

(1) Use 0.032-inch diameter wire as a feeler gage to measure contact-tip gap. Close armature to check gap of normally-closed contacts.

(2) Place the 0.032-inch diameter wire between armature stop and armature (relay open) and bend stationary contacts (normally closed) until they just touch the movable contacts - Fig. 18-20.

(3) Place the 0.032-inch diameter wire between the armature and the core (near top of core) and close armature. Bend stationary contacts (normally open) to just touch movable contacts.

NOTE: A bell-ringer set or a low-voltage light-box set connected to contact terminals is helpful in checking points where contacts touch.

(4) Measure final tip pressure (minimum 50 grams) using gram gage. Press tip of gram gage against contact finger near tips, to just break a closed contact - Fig. 20-20.

(5) Adjust calibrating spring to set pick-up and drop-out values only after repairs requiring recalibration.

(6) Check pickup and dropout by using 75 volts (battery voltage) in series with rheostats of proper rating.

RESISTORS

660-HP LOCOMOTIVES

Battery-Charger Resistor - CE-247-A1 Panel (Not used when regulator has current limit)	K-6724194
Exciter-Field Resistor - One CE-247-A1 Panel and one CE-247-B1 Panel Connections per	K-6724768
Generator-Field Discharge Resistor on 17FR7C8 Panel	K-6725730
Grounding Resistor - CE-247-D Panel per	K-6724195
Transfer-Relay Resistors on 17FR7C8 Panel	K-6725730
Wheel-Slip Relay Resistors - 17FR7B4 Panel	K-6724196
Traction-Motor Field-Shunting Resistors	K-4738807
Headlight Resistor	
100-watt, 32-volt lamps - CE-247-B1 Panel	K-6724761
250-watt, 32-volt lamps - CE-247-B1 Panel	K-6724609
Governor Solenoid Resistor - 17FR7D2 Panel	K-6724198

1000-HP LOCOMOTIVES

Battery-Charger Resistor - CE-247-A per (Not used when voltage regulator has current limit)	K-6724194
Exciter-Field Resistor - CE-247-D1 Panel per	K-6724777
Generator-Field Resistor - 17FR7C8 Panel per	K-6724604
Ground-Relay Resistor - CE-247-D Panel per	K-6724195
Transfer-Relay Resistor - 17FR7C8 Panel per	K-6724604

Wheel-Slip Relay Resistor - 17FR7B6	
Panel per	K-6724602
Traction-Motor Field-Shunting Resistor	K-4738807
Headlight Resistor	
100-watt lamps	K-6724761
250-watt lamps	K-6724609
200-watt sealed beam, 32 volt	K-8862091
Governor Solenoid Resistor - 17FR7D2	K-6724198

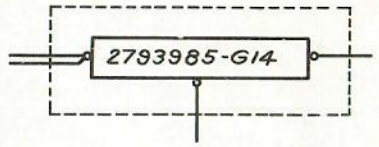

QUANT.	PART	CATALOG No.
1	UNIT	2793985-G14
4	STEEL HEX. NUTS #10-32	
4	STEEL MCH. SCREWS RH #10-32X5/16	
4	LOCKWASHERS	SHAKEPROOF TYPE 1210 OR EQUIV.
1	PANEL	CE-247-A1 OUTLINE K-210524 DL-710525

APPROX. AVER. RESISTANCE OF EACH SECTION = .245 OHM

REVISIONS		
3	Nov. 27 1944	
2	May 14, 1947	
1	July 17 1942	

CE-247-A1 PANEL

FOR BATTERY CHARGE RESISTOR ON 660 OR 1000 H.P. ALCO-GE SWITCHING LOCO.

4610-B

DRAWN BY Wm Aldrich AUG. 27-1941 INSPECTED BY Wm Aldrich Aug 27-1941

GENERAL ELECTRIC WORKS ERIE

K-6724194

10351	3
9605 F3	2
6775	1
PRINTS TO	

RC

FF-566 2m 2-28-40 *

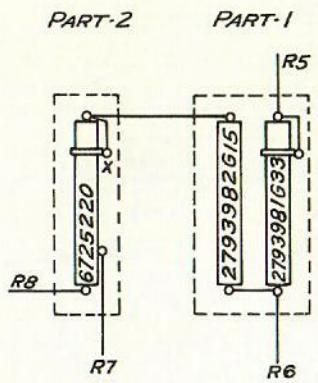

LABEL TERMINALS AS INDICATED

LABEL PANELS "FOR USE WITH 660 H.P. LOCOS."

ADJUST R5 - R6 TO 34 OHMS
ADJUST R7 - TO X = 1.5 OHMS

PART-1
CE-247-B1 PANEL
WITH THE FOLLOWING PARTS

QUAN.	PART	CATALOG NO.
1	UNIT	2793981G33
1	UNIT	2793982G15
1	CONNECTOR	6700553
1	JUMPER	NO. 12 STRAND, ASBESTOS COVERED WIRE SI-57001
1	CONTACT CLIP ASSEMBLY	K-4734358G-15
4	STEEL HEX. NUTS #10-32	
4	STEEL MCH. SCREWS RH #10-32 X 5/16	
4	LOCKWASHERS	SHAKEPROOF TYPE 1210 OR EQUIV.

PART-2
CE-247-A1 PANEL
WITH THE FOLLOWING PARTS

QUAN.	PART	CATALOG NO.
1	UNIT	6725220
1	JUMPER	NO. 12 STRAND, ASBESTOS COVERED WIRE SI-57001
1	CONTACT CLIP ASSEMBLY	K-4734358G-15
4	STEEL HEX. NUTS #10-32	
4	STEEL MCH. SCREWS RH #10-32 X 5/16	
4	LOCKWASHERS	SHAKEPROOF TYPE 1210 OR EQUIV.

REVISIONS		
3	May 14, 1943 J. M. Wetzel	
2	May 15, 1943 J. M. Wetzel	
1	April 26, 1943 J. M. Wetzel	J.T.C.

CE-247-PANELS FOR EXCITER FIELD RESISTORS ON 660 H.P. ALCO-G.E. SWITCHING LOCOMOTIVE (CONNECTION DIAGRAM)

FIRST MADE FOR:- ALCO 4610S

DRAWN BY J. M. Wetzel JUNE 27, 1942 INSPECTED BY W. R. Post June 29, 1942 J.T.C.

GENERAL ELECTRIC WORKS ERIE

K-6724768

9605 F3 G1 | 859 2 | 8158A 1 | PRINTS TO

R.C.

FF-566 2m 11-4-40

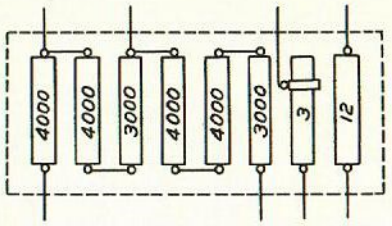

QUAN.	PART	OHMS	DRAWING NO.
1	RES. TUBE	3	QEK-5901210G3
1	RES. TUBE	12	QEK-2673273G1
2	RES. TUBES	3000	QEK-2673273G1
4	RES. TUBES	4000	QEK-2673273G1
1	TERMINALS		K-4735704G9
5	CONNECTORS		V-2455279
1	PANEL		17FR7C8 OUTLINE K-4734136

ADJUST RESISTANCE IN TEST AS FOLLOWS:
3 OHM TUBE = 2.3 OHMS

REVISIONS		
2	May 14, 1943 J. M. Wetzel	
1	May 19, 1943 J. M. Wetzel	J.T.C.

17FR7C8 PANEL
FOR CONTROL RESISTOR ON 660 H.P. ALCO GE SWITCHING LOCO.
(CONNECTION DIAGRAM)

FIRST MADE FOR: ALCO 8265A

DRAWN BY J. M. Wetzel MAY 13, 1943 INSPECTED BY W. R. Post May 15-1943

GENERAL ELECTRIC WORKS ERIE

K-6725730

10351 F1 2 | 9605 F1 1 | PRINTS TO

R.C.

PRINTED IN U. S. A. FF-566 2m 5-18-42

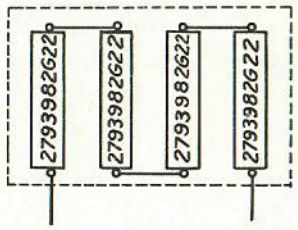

QUANT.	PART	CATALOG No.
4	UNITS	2793982622
3	CONNECTORS	6700553
8	STEEL HEX. NUT #10-32	
8	STEEL MCH. SCREW RH #10-32 X 5/16	
8	LOCKWASHER	SHAKEPROOF TYPE 1210 OR EQUIV.
1	PANEL	CE-247-DI OUTLINE K-2765145 DL-2755640

APPROXIMATE RESISTANCE
TOTAL = 7.5 OHMS

CE-247-DI PANEL

FOR GROUND RELAY RESISTOR 660-1000-2000 H.P. ALCO-GE LOCOS.

4610-C

REVISIONS			
2	Nov. 27, 1946	DRAWN BY W. M. Westcott AUG. 27. 1941.	INSPECTED BY W. R. Stichler Aug 27-1941. CK
1	June 4, 1947	GENERAL ELECTRIC WORKS ERIE	K-6724195

10351 2
960513 1
PRINTS TO

RC

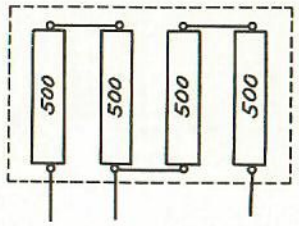

QUANT.	PART	OHMS	DRAWING No.
4	TUBES	500	QFK-2673251-G1
3	CONNECTORS		V-2455279
1	PANEL		17FR7B4 OUTLINE K-4765731

17FR7B4 PANEL

FOR SLIP RELAY RESISTOR 660 H.P. ALCO-GE SWITCHING LOCOS.

4610-D

REVISIONS			
2	Nov. 27, 1946	DRAWN BY W. M. Westcott AUG. 27. 1941.	INSPECTED BY W. R. Stichler Aug 27-1941.
1	June 4, 1947	GENERAL ELECTRIC WORKS ERIE	K-6724196

10351 2
960513 1
PRINTS TO

RC

K-4738807

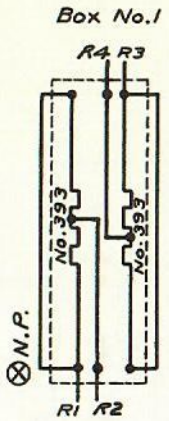

Misc. Parts	Box No. 1
Catalog No.	Quantity
2743999G3	2
2743999G4	2

Approximate Resistance
R1-R2 = R3-R4 = .01075 Ohm

Note:-Terminals Supplied By A.L.Co.
Box No.1 - 17EW102A2, Outline K-8867677

EW Field Shunting Resistor
For Use With 4 - GE731 Motors
(Connection Diagram)

3 Mar. 1, 1950 V.M. Watt WB
2 Aug. 27, 1940 V.M. Watt CAB
1 May 22, 1940 V.M. Watt CAB

First Made For: A.L.Co. 660 & 1000 H.P. Locos. R3474 9605 3
V.M. Watt Oct. 6. 1939 W.R. Post Oct. 10-1939 CAB 23118 2
19518 1

Revisions | General Electric Works | Erie | K-4738807

RC

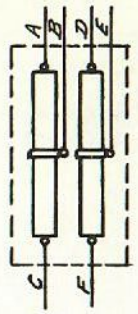

Adjust Resistor In Test
As Follows:
B-C = E-F = 14 Ohms

Quan.	Part	Catalog No.
2	Units	2793981G9
2	Contact Clip Assemblies	K-4734358G15
4	Steel Hex Nuts #10-32	
4	Steel Mch Screws RH #10-32 x 5/16	
4	Lockwashers	Shakeproof Type 1210 Or Equiv.
1	Panel	CE-247-B1 Outline K-2765193 DL-2755638

CE-247-B1 Headlight Resistor Panel
For 100 Watt, 32 Volt Lamps On 74 Volt Circuit 660 H.P. Loco
(Connection Diagram)

3 Mar. 1, 1950 V.M.
2 Aug. 27, 1947 V.M.
1 Oct. 26, 1942 V.M. Watt J.T.C.

First Made For: ALCO 46117I 10351 3

Drawn By V.M. Watt JUNE 24.1942 Inspected By W.R. Post June 26-1942 J.T.C. 96353 2

Revisions | General Electric Works | Erie | K-6724761 | 6935F 1 | Prints To

RC

Printed In U.S.A. FF-588 2m 5-16-41

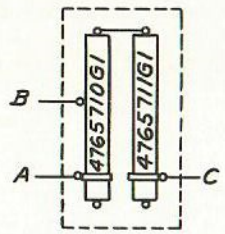

ADJUST RESISTORS IN TEST AS FOLLOWS:-
A-B = 5.9 OHMS
B-C = 5.6 OHMS

CE-247-B1 PANEL WITH THE FOLLOWING PARTS

QUAN.	PART	CATALOG No.
1	UNIT	4765710G1
1	UNIT	4765711G1
1	CONNECTOR	6700553
2	CONTACT CLIP ASSEMBLIES	K-4734358G-15
3	STEEL HEX NUTS #10-32	
3	STEEL MCH SCREWS RH #10-32 X 5/16	
3	LOCKWASHER	SHAKEPROOF TYPE 1210 OR EQUIV.

CE-247-B1 PANEL
FOR HEADLIGHT RESISTOR FOR 250 WATT 32 VOLT LAMP ON 74 VOLTS
(CONNECTION DIAGRAM)
FIRST MADE FOR: ALCO 4612H

2 Dec. 13, 1950
1 Mar. 27, 1949
REVISIONS

DRAWN BY V. M. Wetzel SEPT. 2, 1941 INSPECTED BY W. W. Wiedein Sept. 3-1941

GENERAL ELECTRIC WORKS ERIE

K-6724609

10322 2
9605L3 1
PRINTS TO

RC

FF-566 2m 2-28-40 *

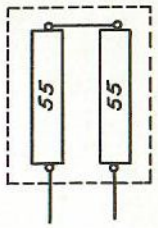

QUANT.	PART	OHMS	DRAWING No.
2	RES. TUBES	55	QFK-5901206G1
1	CONNECTOR		V-2455279
1	PANEL		17FR7D2 OUTLINE K-4737902

17FR7D2 PANEL
FOR GOVERNOR SOLENOID RESISTOR 660, 1000 & 2000 H.P.
ALCO-GE LOCOS.
4610-F

2 Mar. 27, 1949
1 Jan. 4, 1949
REVISIONS

DRAWN BY V. M. Wetzel AUG. 27, 1941 INSPECTED BY W. W. Wiedein Aug. 27-1941

GENERAL ELECTRIC WORKS ERIE

K-6724198

10351 2
9605L3 1
PRINTS TO

RC

FF-566 2m 2-28-40 *

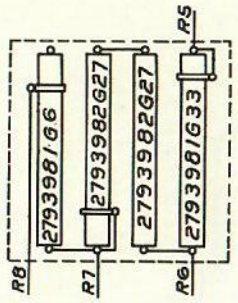

LABEL TERMINALS AS INDICATED.

LABEL PANEL "FOR USE WITH 1000 H.P. LOCOS."

QUAN.	PART	CATALOG No.
1	UNIT	2793981G33
2	UNITS.	2793982G27
3	CONNECTORS	6700553
2	JUMPERS	NO. 12 STRAND ASBESTOS COVERED WIRE SI-57001
1	UNIT	2793981G6
3	CONTACT CLIP ASSEMBLIES	K-4734358 6-15
3	STEEL HEX. NUTS #10-32	
3	STEEL MCH. SCREWS RH #10-32 X 5/16	
3	LOCKWASHERS	SHAKEPROOF TYPE 1210 OR EQUIV.
1	PANEL	CE-247-D1 OUTLINE K-2765145 DL-2755640

ADJUST RESISTORS AS FOLLOWS:

R5-R6 = 18.0 OHMS
R6-R7 = 8.0 OHMS
R7-R8 = 12.0 OHMS

CE-247-D1 PANEL
FOR EXCITER FIELD RESISTORS ON 1000 H.P. ALCO-G.E. SWITCHING LOCO. (CONNECTION DIAGRAM)
FIRST MADE FOR: ALCO 4610T

DRAWN BY Geo. Garner JULY 16, '42 INSPECTED BY W.B. Post July 18-1942 J.T.C.

GENERAL ELECTRIC WORKS ERIE PC

K-6724777

REVISIONS		PRINTS TO	
5	Nov. 27, 1950	10351	5
4	May 19, 1948	9605F3	4
3	Feb. 5, 47	6182A	3
2	July 11, 1944	8158A1	2
1	Aug. 26-1943	8158A	1

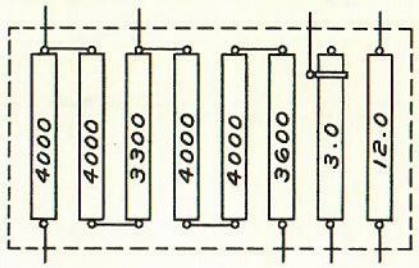

17FR7C8 PANEL
WITH THE FOLLOWING PARTS

QUAN.	PART	OHMS	CATALOG No.
4	UNITS	4000	QFK-2673273G1
1	UNIT	3600	QFK-2673273G1
1	UNIT	3300	QFK-2673273G1
1	UNIT	3.0	QFK-5901210G3
1	UNIT	12.0	QFK-2673273G1
1	TERMINAL		K-4735704-G9
5	CONNECTORS		V-2455279

SET THE 3 OHM TUBE AT 1.86 OHMS

17FR7C8 CONTROL RESISTOR PANEL
FOR 1000 H.P. ALCO-G.E. LOCOMOTIVES
(CONNECTION DIAGRAM)
FIRST MADE FOR: ALCO 4611E

DRAWN BY W.M. Wetzel Aug. 23, 1941 INSPECTED BY W.R. Hickin Sept. 2-1941

GENERAL ELECTRIC WORKS ERIE PC

K-6724604

REVISIONS		PRINTS TO	
2	May 19, 1948	9605F1	2
1	Nov. 13, 1947	9613A2	1

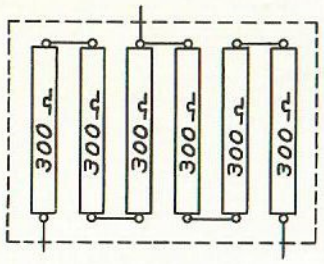

ALL TUBES CONNECTED IN SERIES

17FR7B6 PANEL
WITH THE FOLLOWING PARTS

QUAN.	PART	OHMS	CATALOG No.
6	RESISTOR UNITS	300 (EACH)	QFK-267325161
5	CONNECTORS		V-2455279

17FR7B6 WHEEL SLIP RESISTOR PANEL
FOR USE ON 1000 & 2000 H.P. ALCO-G.E. DIESEL-ELECTRIC LOCOMOTIVES (CONNECTION DIAGRAM)
FIRST MADE FOR: ALCO 4611C

DRAWN BY V.m. Wentzel AUG. 22. 1941 INSPECTED BY W.R. Dickin Sept 2-1941 7713

1 June 8 1947 A.A. Dailey
REVISIONS

GENERAL ELECTRIC WORKS ERIE

K-6724602

960513 1
PRINTS TO

RC

K-6724761

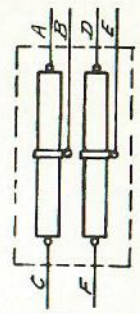

ADJUST RESISTOR IN TEST AS FOLLOWS:
B-C = E-F = 14 OHMS

QUAN.	PART	CATALOG No.
2	UNITS	2793981 G9
2	CONTACT CLIP ASSEMBLIES	K-4734358G15
4	STEEL HEX NUTS #10-32	
4	STEEL MCH SCREWS RH #10-32 x 5/16	
4	LOCKWASHERS	SHAKEPROOF TYPE 1210 OR EQUIV.
1	PANEL	CE-247-B1 OUTLINE K 2765143 DL-2755638

CE-247-B1 HEADLIGHT RESISTOR PANEL
FOR 100 WATT, 32 VOLT LAMPS ON 74 VOLT CIRCUIT 660 H.P. LOCO
(CONNECTION DIAGRAM)
FIRST MADE FOR: ALCO 4611T1

DRAWN BY V.m. Wentzel JUNE 24. 1942 INSPECTED BY W.R. Post June 26-1942 J.T.C.

3 July 7 1947 R.E.D.
2 June 9 1947
1 Oct. 26 1944 J.T.C. V.m. Wentzel
REVISIONS

GENERAL ELECTRIC WORKS ERIE

K-6724761

10351 3
962513 2
6935F 1
PRINTS TO

RC

PRINTED IN U.S.A. FF-586 2m 5-16-41

GENERAL ELECTRIC

K-8862091

REV NO. 1 | K-8862091 CONT ON SHEET SH NO.

TITLE CONSTRUCTION DIAGRAM
CE-247-D1 PANEL FOR HEADLIGHT RESISTOR
FOR 2-200WATT 30 VOLT SEALED BEAM LAMPS ON 75 VOLTS
FIRST MADE FOR ALCO

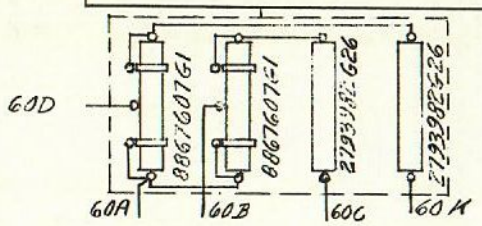

ADJUST RESISTORS IN TEST AS FOLLOWS

60A - 60B = 6.35 OHMS ± 10%
60A - 60D = 6.35 OHMS ± 10%
60B - 60C = 6.75 OHMS + 2% - 0
60D - 60K = 6.75 OHMS + 2% - 0

QUANTITY	PART	CATALOG NUMBER
2	UNIT	8867607G1
2	UNIT	2793982G26
4	CONTACT CLIP ASSEMBLIES	K-4734358G15
2	NUT, STEEL HEX. #10-32	
2	SCREW, STEEL R.H. #10-32 X 5/16"	
2	LOCKWASHER	SHAKEPROOF TYPE 1210 OR EQUIV.
2	CONNECTORS	6700553
1	PANEL	CE-247-D1, DL-2755640 OUTLINE K-2765145

REVISIONS

5 Mar. 15, 1951 V.M. Wetzell — CHGD 60DB TO 60D IN RESISTANCE TABLE	3 May 25, 1950 V.M. Wetzell — CHANGED TOLERANCE OF 60A-60B & 60A-60BB	1 Feb. 23, 1950 V.M. Wetzell — CHGD RESISTANCES & CONNECTIONS OF UNITS
	4 Feb. 21, 1951 — CHGD. WIRE NOMENCLATURE. 60BB TO 60D & 60CC TO 60K.	2 Nov. 19, 1950 — ADDED TOLERANCES TO RESISTORS

PRINTS TO: 5 9228 M1; 4 9228 M; 3 9222AJB; 2 9222AA1; 1 9222AA; 9222M10

MADE BY V.M. Wetzell FEB. 15, 1950
ISSUED V.M. Wetzell Feb. 16, 1950
APPROVALS
CONTROL DIV ERIE WORKS
K-8862091 CONT ON SHEET SH NO.
RC

FF-803-P (3-49)
PRINTED IN U.S.A.

ELECTRO-PNEUMATIC REVERSER

TYPE ME-57-A5, E5, E6, EA5, EA6
(See Fig. 2-22)

INSPECTION AND CARE

1. Make frequent inspections to guard against weak fingers, poor contacts and loose connections.

2. Clean contacts when necessary.

3. Keep bearing grease cups filled with a good grade of cup grease. Tighten cap periodically to insure that bearings are properly lubricated.

4. Test operation of controller (air in system, power off) by depressing valve pins on top of magnet valves. If operation is sluggish the air cylinder probably needs lubrication and attention. See Section 13 under AIR CYLINDERS.

5. If magnet valves are sticky or leak air, see Section 18 - MAGNET VALVES for overhaul information.

6. Check main and control fingers monthly to insure that pressures are within limits given under DATA; adjust if necessary. See Fig. 1-22.

7. About 1/8-inch wear is allowable on main fingers before renewal is necessary. Renew control fingers when worn halfway through.

DATA

Main Fingers

a. Amperes continuous capacity (per motor circuit) . . . . . 750 amps
b. Contact pressure for individual main fingers 15 to 20 lb

Control Fingers

a. Pressure . . . . . 2-5 lb

Magnet Valve

a. Catalog No. 3046106
b. Ohms resistance at 25 C 886
c. Amperes to operate 0.04

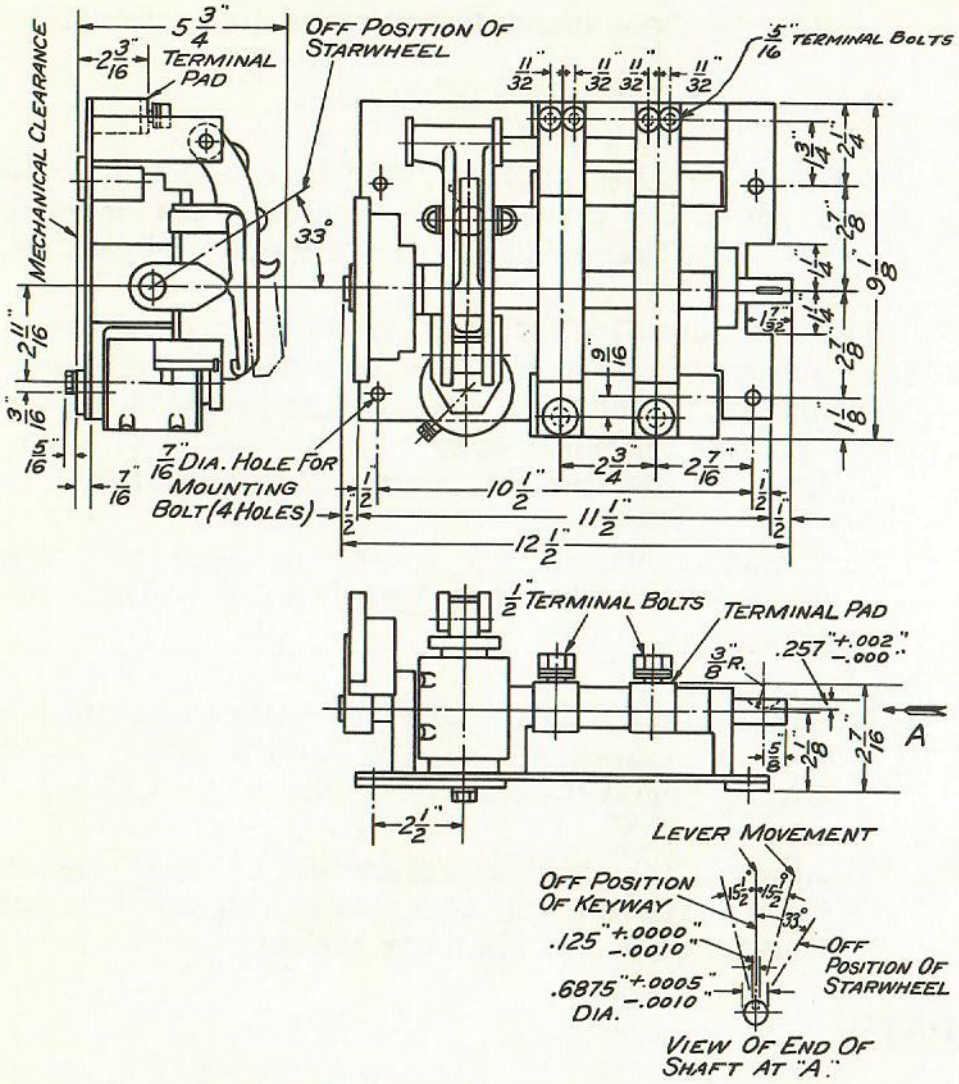

NOTE:- 275 TO 400 INCH POUNDS REQUIRED TO OPERATE SWITCH WITH LOCKING COIL DEENERGIZED.
700 TO 1100 INCH POUNDS REQUIRED TO OPERATE SWITCH WITH LOCKING COIL ENERGIZED.

THE SUPPORTS OF THIS APPARATUS MAY BE GROUNDED.

Fig. 1-22
Finger adjustment for Type ME-57 reverser.

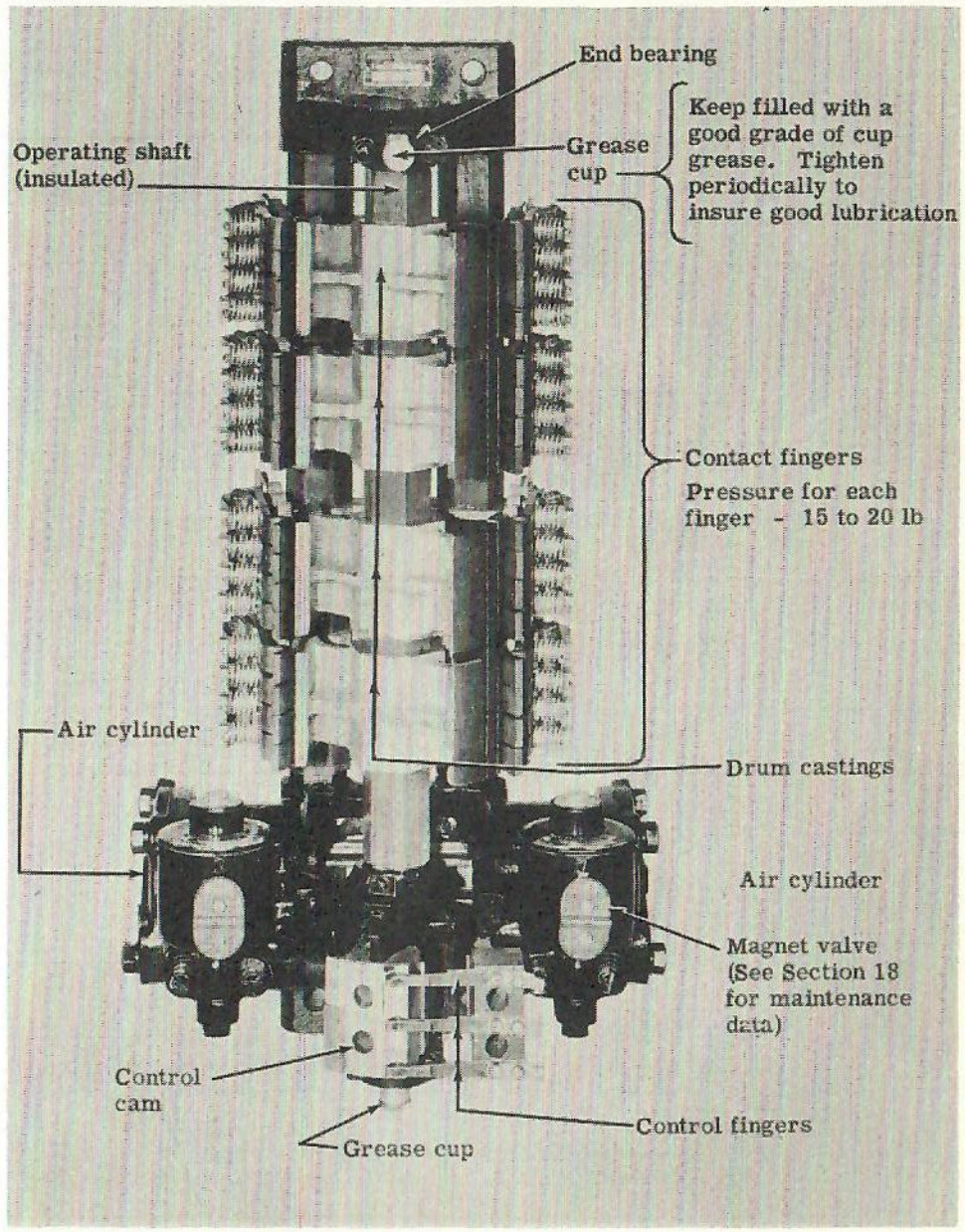

Fig. 2-22
Electro-pneumatic reverser, Type ME-57.

NOTES

SWITCHES

A. PUSH-BUTTON CONTROL SWITCH (117) TYPE 17HP4L3

See LOCOMOTIVE CONNECTION DIAGRAM for switch development and details.

INSPECTION

1. Always have switch open before removing fuses. Fuse clips must be tight.

2. Examine switches periodically for loose connections, broken parts and finger tension. Clean contacts monthly by wiping off with dry clean cloth. Relubricate by applying a thin film of G-E D50E6 grease.

3. Renew fingers and contact segments when combined wear is sufficient to cause poor contact.

See Fig. 1-23.

B. THROTTLE SWITCHES (101 AND 110) TYPE PS-21

COIL DATA	PS-21-D8	PS-21-D9
Cat. No.	4739178	4739179
Res. at 25 C	0.61 ohm	0.081 ohm

See Section 13 for maintenance of silver contacts.

When closing throttle handle see that coil holds contacts together long enough to give quick break action; otherwise check spring and coil.

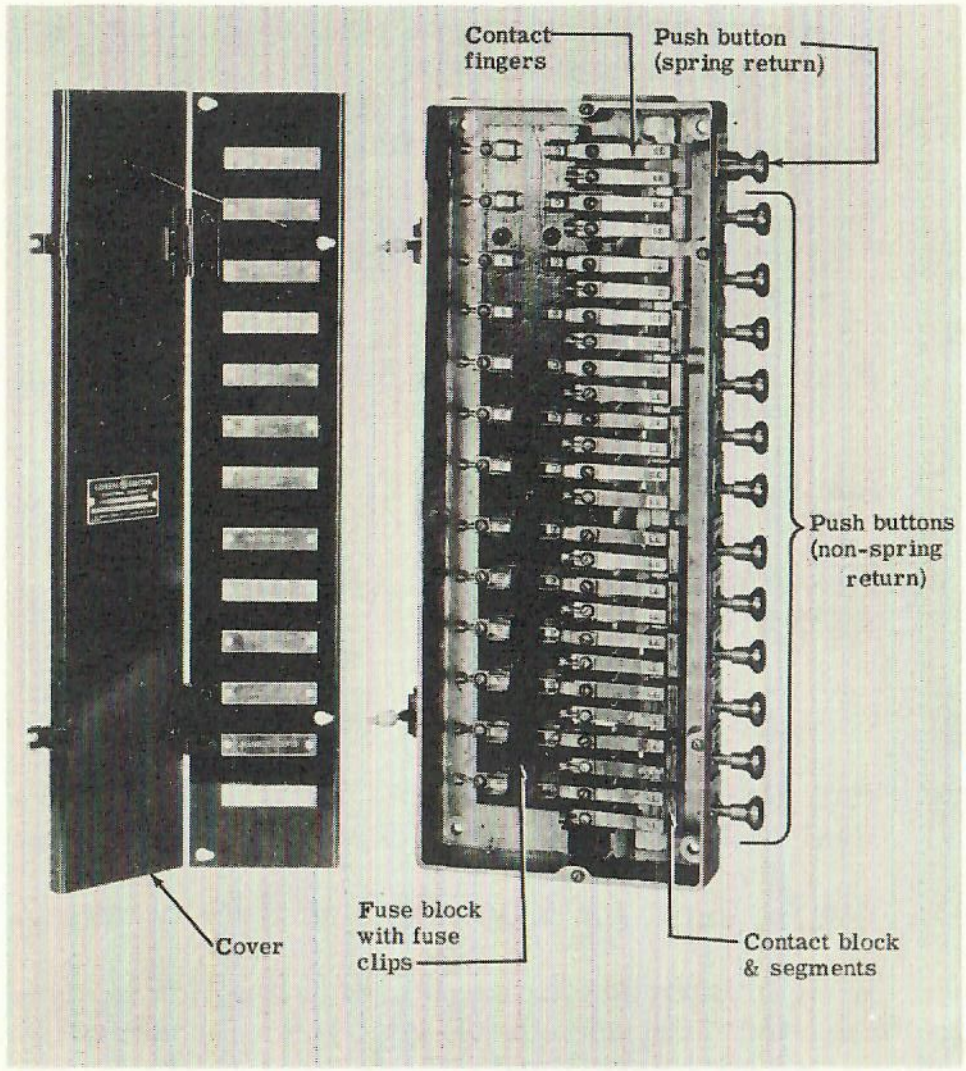

Fig. 1-23
Push button control switch, Type 17HP4L3.

INDEX

Page

A

Adding Lube Oil To Engine ---- 403
Adjusting Valve Clearance ---- 164
Air Brake Schedule ---- 5, 612
Air Compressor ---- 601
  Air Valves and Unloader Arrangement ---- 605
  Connecting Rods and Pistons ---- 604
  Crankcase Breather ---- 607
  Details ---- 602
  Discharge Valves ---- 606
  Drive ---- 707
  Drive Coupling ---- 707
  Inlet Valves ---- 606
  Intake Strainers ---- 601
  Intercooler ---- 601
  Internal Oiling System ---- 603
  Lubricating Oil Capacity ---- 5
  Lubrication ---- 604
  Oil Pump and Strainer ---- 604
  Orifice Test ---- 608
  Replacing Inlet and Discharge Valve Assemblies ---- 607
Air Compressor Governor Type NS 16 ---- 608
Air Compressor Governor Type S 16 ---- 609
Air Filter, Engine ---- 139
  Maintenance ---- 140
Air Manifold, Engine ---- 139
Air Pressure Does Not Build Up ---- 613
Air Problems ---- 612
Air System ---- 601, 610
  Diagram ---- 614
Air Valve
  Removal ---- 149
  Reseating ---- 152
Air Valve Guide
  Installation ---- 151
  Removal ---- 151
Air Valve Lever Spring ---- 147
Armature
  Dynamic Balance ---- 815
  Handling of ---- 812
  Maintenance of ---- 806
Auxiliary Drives ---- 6, 704
Auxiliary Generator - Exciter ---- 718,1101
Axle Bearings (Linings)
  End Play, Measurement of ---- 1028
  Felt-wick Lubrication ---- 1025
  Replacement of ---- 1029
  Waste Packed, Inspection of ---- 1018
  Waste Packed, Repacking of ---- 1019

B

Base, Engine ---- 134
  Covers ---- 134
  End Covers ---- 134
  Screens ---- 134
Battery ---- 701
  General Rules ---- 703
  Hydrometer Readings ---- 701
  Inspection ---- 702
  Regulation ---- 702
Bayonet Gauge
  Air Compressor Lube Oil ---- 604
  Engine Lube Oil ---- 134, 403

Page

Bearings, Electrical Equipment
- Cleaning ---- 827
- Conversion to Sealed Lubrication ---- 834
- Defects ---- 829
- Inspection ---- 827
- Interchangeability of ---- 833
- Repacking of ---- 834

Belts ---- 704
Brake Cylinder Piston Travel, Road Switcher ---- 724
Broken Fuel Pipe ---- 311
Brush Holder ---- 821
- Inspection ---- 821
- Reconditioning of ---- 823

Brushes ---- 825
- Sanding of ---- 825
- Seating of ---- 825

C

Camshaft ---- 249
- Bearing Clearance ---- 15
- Disassembly ---- 254
- Gear to Idler Gear Clearance (Gear Train) ---- 15
- Gear Removal ---- 254
- Inspection and Maintenance ---- 255
- Installation ---- 256
- Reassembly ---- 255
- Removal ---- 254
- Timing ---- 250

Chassis ---- 701
Clearances, Engine ---- 14
Commutator ---- 815
- Air Curing of ---- 820
- Final Grinding of ---- 818
- Grinding Without Removing Armature ---- 816
- Polishing of ---- 819
- Sanding of ---- 816
- Seasoning of ---- 820
- Soldering of ---- 819
- Tightening of ---- 820
- Turning of ---- 817
- Undercutting Mica of ---- 818

Compression Seal Ring ---- 156
Connecting Rod ---- 173
- Bearing and Bushing Lubrication ---- 177
- Bearing Application ---- 179
- Bearing Clearances ---- 14
- Bearings, Undersize ---- 176
- Installation of ---- 178
- Maintenance ---- 176
- Removal ---- 175

Contactors
- Type 17CM ---- 1401
- Type 17CP ---- 1401

Control Air Pressure ---- 610
Control Air System ---- 610
Control Equipment Maintenance, General Information ---- 1301
Controller, Master
- Type C-173-R2 ---- 1501
- Type 17KC53A1 ---- 1501

Cooling Problems ---- 505
Cooling Water System ---- 501
- Capacity ---- 5
- Diagram - 660 HP Switcher ---- 507
- Diagram - 1000 HP Switcher and Road Switcher ---- 508
- Drain ---- 503
- Expansion Tank Capacity ---- 5

Page

- Fill ---- 501
- Level ---- 502
- Temperature ---- 506
- Temperature Control (Manual) ---- 506
- Treatment ---- 502

Coupling, Flexible
- Falk, Radiator Fan Drive ---- 711
- Fast's, Air Compressor Drive ---- 707
- Fast's, Radiator Fan Drive ---- 712

Crankcase Breathers ---- 135, 272
Crankpin Bearing Clearance ---- 14
Crankshaft ---- 180
- Deflection ---- 270
- Gear ---- 182
- Gear Installation ---- 183
- Gear Maintenance ---- 183
- Gear Removal ---- 182
- Gear Timing ---- 183
- Gear to Idler Gear Clearance (Gear Train) ---- 15
- Installation ---- 182
- Main and Crankpin Journal Dimensions ---- 181
- Maintenance ---- 181
- Removal ---- 180
- Thrust ---- 14, 183

Cross Section
- Drawing, 660 HP Engine ---- 40
- Drawing, 1000 HP Engine ---- 41

Curvature, Minimum Radius ---- 4
Cutting Out Fuel Injection Pump ---- 309
Cylinder Block ---- 136
- Block to Base Application ---- 138
- Maintenance ---- 138
- Removal ---- 137

Cylinder Head ---- 148
- Air and Exhaust Valve Guide Installation ---- 151
- Air and Exhaust Valve Guide Removal ---- 151
- Air and Exhaust Valve Removal ---- 149
- Air and Exhaust Valve Reseating ---- 152
- Bushings and Gaskets ---- 158
- Compression Seal Ring ---- 156
- Disassembly ---- 149
- Gas Leaks, Causes and Corrections ---- 163
- Indicator Hole Plug ---- 155
- Installation of ---- 159
- Maintenance ---- 151
- Nozzle Clamp ---- 157
- Nozzle Hole Bushing ---- 156
- Reassembly ---- 159
- Removal ---- 149
- Water Leaks, Causes and Corrections ---- 161
- Water Test ---- 158

Cylinder Liner ---- 178
- Clearance ---- 16
- Installation ---- 179
- Maintenance ---- 178
- Removal ---- 178
- Wear Limits ---- 178

Cylinder Location ---- 13
Cylinder Not Firing ---- 311

D

Description, Locomotive ---- 3
Diesel Engine ---- 101
Diesel Engine, Description ---- 12
Dilution, Lubricating Oil ---- 407

Page

Draining
- Air System ---- 611
- Cooling Water ---- 503
- Fuel Tank ---- 303
- Governor ---- 103, 124
- Lubricating Oil ---- 403

E

Electrical Rotating Apparatus
- Cleaning by Steam Jenny ---- 803
- Cleaning by Vapor Degreasing ---- 802
- Cleaning of ---- 801
- Cleaning Solvents ---- 803
- General Maintenance ---- 801
- Inspection After Repairs ---- 841
- Overhaul Instructions ---- 804
- Testing After Repairs ---- 841

Elevation Drawing, 660 HP Engine ---- 38
Elevation Drawing, 1000 HP Engine ---- 39
Emergency Fuel Cutoff Valve ---- 302
Engine ---- 101
- Air Filter ---- 139
- Air Filter Servicing ---- 140
- Balancing ---- 268
- Barring Hole Cover ---- 135
- Base ---- 134
- Base Maintenance ---- 135
- Bore and Stroke ---- 13
- Clearances ---- 14
- Cubic Inch Displacement ---- 13
- Data ---- 13
- Description ---- 12
- Engine and Generator Removal ---- 133
- Horsepower ---- 13
- Installation ---- 272
- Low Oil Pressure Switch ---- 403
- No. of Cylinders ---- 13
- Overspeed Trip ---- 216
- Running-in Procedure ---- 274
- Speed ---- 13
- Speed Adjustment ---- 130
- Water Capacity ---- 5
- Water Temperature ---- 506
- Water Temperature Control (manual) ---- 506

Excessive Lube Oil Consumption ---- 408
Exciter-Auxiliary Generator Set ---- 718, 1101
- GMG-139, Assembly of ---- 1111
- GMG-139, Disassembly of ---- 1102
- GMG-139, Lubrication of ---- 1102
- GMG-139, Maintenance Data ---- 1101
- GMG-144, Assembly of ---- 1119
- GMG-144, Disassembly of ---- 1117
- GMG-144, Lubrication of ---- 1117
- GMG-144, Maintenance Data ---- 1116

Exhaust Manifold ---- 141
- Maintenance ---- 142

Exhaust Valve
- Reseating ---- 152
- Removal ---- 149

Exhaust Valve Guide
- Installation ---- 151
- Removal ---- 151

Explosion Cover ---- 272

F

Page

Falk Coupling, Radiator Fan Drive ---- 711
Fast's Coupling, Air Compressor Drive ---- 707
Fast's Coupling, Radiator Fan Drive ---- 712
Field Coils ---- 825
- Polarity Test ---- 1030

Filler and Drain Diagrams
- 660 HP Switcher ---- 26
- 1000 HP Switcher ---- 28
- 1000 HP Road Switcher ---- 30

Filling
- Cooling Water ---- 501
- Fuel Tank ---- 303
- Governor ---- 103, 125
- Lubricating Oil ---- 403

Filters
- Air Compressor ---- 602
- Engine Air ---- 139
- Fuel Oil Duplex ---- 303
- Fuel Oil Felt ---- 306
- Fuel Oil Filter and Strainer Assembly ---- 304
- Fuel Oil Paper ---- 306
- Lubricating Oil ---- 404, 405

Firing Order ---- 13
Freezing Weather Precautions ---- 504
Fuel Booster Pump ---- 16, 307
- Does Not Run ---- 310

Fuel Drainage System ---- 308
Fuel Injection Nozzle and Holder ---- 230
- Clamp ---- 157
- Disassembly, Inspection and Maintenance ---- 233
- Drainage ---- 308
- Gasket ---- 248
- Hole Bushing ---- 156
- Identification ---- 249
- Installation ---- 248
- Opening Pressure ---- 13
- Reassembly ---- 246
- Reconditioning ---- 235
- Removal ---- 232
- Testing ---- 233
- Tubes ---- 247

Fuel Injection Pump ---- 219
- Cutout ---- 309
- Disassembly and Maintenance ---- 221
- Drainage ---- 309
- Identification ---- 229
- Installation ---- 226
- Rack Setting ---- 13, 229
- Racking Setting Adjustment ---- 229
- Reassembly ---- 225
- Removal ---- 209, 221
- Timing ---- 13, 227

Fuel Injection Pump and Governor Drive ---- 204
Fuel Injection Pump Camshaft
- Bearing Removal ---- 209
- Camshaft and Drive Shaft Separation ---- 209

Fuel Injection Pump Casing
- Installation ---- 212
- Disassembly ---- 208
- Maintenance ---- 209
- Reassembly ---- 209
- Removal ---- 206

Fuel Injection Pump Control Shaft Removal ---- 208
Fuel Injection Pump Crosshead Removal ---- 209
Fuel Injection Pump Cutout Shaft Removal ---- 208

Page

Fuel Injection Pump Drive Shaft
- Clearance ---- 15
- Gear Removal ---- 207, 258
- Removal ---- 207

Fuel Oil Duplex Filter ---- 303
Fuel Oil Filter and Strainer Assembly ---- 304
- Drainage ---- 305
- Drawing ---- 305

Fuel Oil System ---- 301
- Cutoff Valve ---- 302
- Diagram, 660 and 1000 HP Locomotives ---- 312
- Diagram, 1000 HP Road Switcher ---- 313
- Oil Pressure ---- 307
- Oil Pressure Drops ---- 308, 310
- Oil Pressure Regulating Valve ---- 307
- Oil Pressure Relief Valve ---- 307
- Problems ---- 310

Fuel Pipes, High Pressure ---- 309
Fuel Tank
- Capacity ---- 5
- Drain Valve ---- 303
- Draining ---- 303
- Filling ---- 303
- Sight Glass ---- 303

G

Gear Cases, Traction Motor ---- 1030
Gear Ratio, Traction Motor ---- 4
Gear Train ---- 256
- Camshaft Gear, Removal of ---- 254
- Crankshaft Gear, Removal of ---- 182
- Fuel Injection Pump Drive Shaft Gear, Removal of ---- 258
- Gear Clearance ---- 15
- Gear Teeth Inspection ---- 261
- Governor Drive Gear, Removal of ---- 256
- Idler Gear, Removal of ---- 259
- Idler Gear, Replacement of ---- 260
- Reassembly of ---- 262
- Timing of ---- 262

Gear Unit
- Adjusting Backlash ---- 1215
- Adjusting Horizontal Shaft End Play ---- 1213
- Adjustment of Horizontal Gear ---- 1210
- Checking Backlash of Gearing ---- 1203
- GA-14-15, Assembly of ---- 1209
- GA-14-15, Disassembly of ---- 1204
- GA-14-15, Inspection of ---- 1202
- GA-14-15, Lubrication of ---- 1201
- GA-14-15, Maintenance Data ---- 1201
- GA-14-15, Overhaul ---- 1202
- GA-14-F1, Assembly of ---- 1221
- GA-14-F1, Disassembly of ---- 1220
- GA-14-F1, Inspection and Overhaul of ---- 1220
- GA-14-F1, Lubrication of ---- 1219
- GA-14-F1, Maintenance Data ---- 1219

Gears, Electrical Equipment, Condemning Limits of ---- 836
General Data ---- 3
- Engine ---- 13
- Locomotive ---- 4

Generator, Traction ---- 266, 901
Governor, Air Compressor, Type NS 16 ---- 608
Governor, Air Compressor, Type S 16 ---- 609
Governor and Fuel Injection Pump Drive ---- 204
Governor Bevel Gear Clearance ---- 15
Governor Drive ---- 204

Page

Governor Drive Gear Clearance ---- 15
- ernor, Engine Speed Adjustment ---- 130
- nor, Engine, Type PG ---- 123
  - escription of Operation ---- 127
  - eneral ---- 123
- Installation ---- 124
- Installation Adjustments ---- 125
- Oil ---- 124
- Schematic Diagram ---- 125
- Speed Adjustment ---- 129

Governor, Engine, Type SI ---- 101
- Installation ---- 122
- Maintenance ---- 103
  - Assembly Instructions ---- 118
  - Ballarm Bearings ---- 107
  - Ballarm Pins ---- 109
  - Ballarm Toes ---- 109
  - Check Valves ---- 113
  - Compensating Spring Adjustment ---- 112
  - Description ---- 101
  - Disassembly into Subassemblies ---- 104
  - Drive Shaft Disassembly and Repair ---- 116
  - Drive Shaft Oil Seal ---- 105
  - Oil Changes ---- 102
  - Oil Level ---- 103
  - Oil Seals ---- 105
  - Pilot Valve Adjustment ---- 111
  - Pilot Valve Bushing ---- 109
  - Pilot Valve Plunger ---- 110
  - Pilot Valve Plunger Bearing ---- 109
  - Piston Rod Oil Seal ---- 107
  - Rotating Sleeve Adjustment and Repair ---- 107
  - Servomotor ---- 114
  - Work Requirements ---- 103
- Removal of ---- 102

H

High Engine Water Temperature ---- 505
High Pressure Fuel Pipes ---- 309
Hot Cylinder ---- 310

I

Index ---- 2401
Indicator Hole Plug ---- 155
Idler Gear to Camshaft Gear Clearance (Gear Train) ---- 15
Idler Gear to Crankshaft Gear Clearance (Gear Train) ---- 15
Idler Gear Removal ---- 259
Idler Gear Replacement ---- 260
Instruments, Type "DO" ---- 1601
Interlocks ---- 1701

J

Jacking and Lifting Diagrams
- 660 HP Switcher ---- 32
- 1000 HP Switcher ---- 34
- 1000 HP Road Switcher ---- 36

Journal Size ---- 5

L

Load Testing (Water Box) ---- 274

Page

Location of Apparatus
660 HP Switcher ---- 20
1000 HP Switcher ---- 22
1000 HP Road Switcher ---- 24
Locomotive
Data ---- 4
Description ---- 3
Dimensions ---- 4
Maintenance
Electrical ---- 11
Mechanical ---- 7
Speed ---- 4
Supplies
Air Compressor ---- 5
Cooling Water ---- 5
Fuel ---- 5
Lubricating Oil ---- 5
Sand ---- 5
Water, Steam Generator ---- 5
Loss of Air Pressure ---- 612
Low Lubricating Oil Pressure ---- 408
Low Lubricating Oil Pressure Switch ---- 403
Mounting ---- 135
Lubricating Oil
Consumption ---- 408
Dilution ---- 407
Problems ---- 407
Specifications ---- 409
Lubricating Oil Bayonet Gauge
Air Compressor ---- 604
Engine ---- 134, 403
Lubricating Oil Filter ---- 405
By-pass Relief Valve ---- 406
Check Valve ---- 406
Installation ---- 406
Packing ---- 406
Removal ---- 405
Lubricating Oil Header ---- 134
Lubricating Oil Low Pressure Switch ---- 403
Lubricating Oil Pressure Regulating Valve ---- 403
Lubricating Oil Pump ---- 16
Delivery ---- 16
Pressure ---- 16
Lubricating Oil Pump and Drive ---- 191
Assembly of ---- 196
Disassembly of ---- 193
Installation of ---- 198
Maintenance of ---- 195
Removal of ---- 191
Lubricating Oil Pump Drive Gear Clearance ---- 15
Lubricating Oil Strainers ---- 135, 404
Lubricating Oil System ---- 401
Capacity ---- 5
Diagram
660 HP Switcher ---- 410
1000 HP Switcher and Road Switcher ---- 411
Filling and Draining ---- 403
Priming ---- 274

M

Magnet Valves ---- 1801
Main Bearing ---- 184
Break-in ---- 186
Caps ---- 134
Clearance ---- 14
Installation ---- 185

Page

Maintenance ---- 184
Removal ---- 184
Undersize ---- 185
Main Frame - See Cylinder Block ---- 136
Main Generator - See Traction Generator ---- 266, 901
Main Reservoir Pressure Poorly Maintained ---- 612
Motor, Traction ---- 4, 1001

O

Oil in Water System ---- 503
Oil Slinger ---- 266
Oil Trap and Crankcase Breather ---- 272
Orifice Test, Air Compressor ---- 608
Overspeed Trip, Engine
Disassembly ---- 217
Installation ---- 218
Maintenance ---- 218
Reassembly ---- 218
Removal ---- 217

P

Piston ---- 165
Cleaning ---- 168
Clearance ---- 15
Disassembly ---- 168
Installation ---- 172
Maintenance ---- 168
Reassembly ---- 171
Removal ---- 166
Piston Pin ---- 166, 169
Bushing Installation ---- 177
Clearance ---- 14, 166
Covers ---- 169
Cups ---- 169
Piston Rings ---- 15, 165, 171
Break-in ---- 173
Gap ---- 15
Groove Wear ---- 170
Over-size ---- 170
Side Clearance ---- 15
Pulleys ---- 706
Alignment ---- 707
Groove Wear ---- 706
Replacement ---- 707
Push Rod Maintenance ---- 146
Push Rod Lifter
Bushing Clearance ---- 14
Maintenance ---- 146

R

Radiator ---- 503
Radiator Fan Drive ---- 710
Alignment ---- 713
Radiator Fan Gear Unit - See "Gear Unit" ---- 1201
Regulating Valve
Fuel Oil Pressure ---- 307
Lubricating Oil Pressure ---- 403
Relays
Type 17LC19 Reverse Current ---- 2001
Type 17LV66J11 ---- 2005
Type 17LV40D ---- 2009
Type 17LV40H22 ---- 2010
Type 17LS7C3 ---- 2011

Page

Type 17LV24E1 ---- 2012
Type 17LC18E2 ---- 2013
Type 17LE51A1 Relay Equipment ---- 2027
Voltage Regulating Relays ---- 2015
Relief Valve, Fuel Oil Pressure ---- 307
Removal of Engine and Generator ---- 134
Resistors ---- 2101
Reversers, Types ME51, A5, E5, E6, EA5, EA6 ---- 2201
Rotating Apparatus Maximum Speeds
Air Compressor ---- 6
Auxiliary Generator and Exciter ---- 6
Cab Heater Motor ---- 6
Diesel Engine ---- 6
Lubricating Oil Pump ---- 6
Motor Driven Fuel Pump ---- 6
Radiator Fan ---- 6
Traction Generator ---- 6
Traction Motor Blower ---- 6
Water Pump ---- 6

S

Safety Valve, Main Reservoir ---- 610
Sand Box Capacity ---- 5
Sanding ---- 611
Speed and Gear Ratio ---- 4
Starting Tractive Effort ---- 4
Steam Generator Water Tank Capacity ---- 5
Supplies (System Capacity)
Air Compressor Lubricating Oil ---- 5
Engine Lubricating Oil ---- 5
Fuel Oil ---- 5
Sand ---- 5
Water ---- 5
Strainer
Fuel Oil, Cuno ---- 305
Lubricating Oil ---- 135, 404
Switches ---- 2301

T

Table of Engine Clearances ---- 14
Testing Main Air Reservoir Safety Valve ---- 610
Throttle Operators ---- 1901
Traction Generator ---- 266, 901
Adjustment of Brush Pressure ---- 907
Alignment with Engine ---- 912
Assembly of ---- 908
Disassembly of ---- 903
Inspection and Maintenance ---- 901
Installation ---- 268
Lubrication ---- 903
Reconditioning of ---- 907
Removal ---- 266
Resurfacing Commutator in Locomotive ---- 915
Traction Motor
Adjustment of Brush Pressure ---- 1014
Assembly of ---- 1031
Axle Bearings ---- 1018
GE 731
Bearing Clearances ---- 1036
Disassembly of ---- 1007
Gear Ratio ---- 4
Inspection After Repairs ---- 1039
Lubrication of ---- 1003
Maintenance Data ---- 1001

Page

Overhaul ---- 1004
Removal and Mounting of Pinions ---- 1004
Replacement of Porcelain Insulator ---- 1017
Replacement of Stud Insulation ---- 1014
Resurfacing Commutator in Locomotive ---- 1041
Testing After Overhaul ---- 1039
Traction Motor Blower ---- 716
Tractive Effort, Starting ---- 4
Trucks
660 and 1000 HP Switchers ---- 728
1000 HP Road Switcher ---- 718
Turbocharger ---- 12, 199
Disassembly ---- 200
Installation ---- 204
Maintenance ---- 201
Reassembly ---- 202
Removal ---- 199

V

Valves
Removal ---- 149
Reseating ---- 152
Timing ---- 13
Valve Guide
Clearance ---- 14
Installation ---- 151
Removal ---- 151
Valve Lever
Bushing Clearance ---- 14
Casing Gaskets ---- 147
Casing Removal ---- 144
Lubrication ---- 144
Maintenance ---- 145
Mechanism ---- 142
Valve Tappet
Clearance ---- 14
Clearance Adjustment ---- 164
Varnishes, for Dipping Armatures and Coils ---- 808
Ventilating Holes, Generator Air ---- 135

W

Water Box (Load Test) ---- 274
Water Capacity, Engine ---- 5
Water in Fuel Tank ---- 303
Water Leaks ---- 505
Water Level ---- 502
Water Pump ---- 15, 186
Capacity ---- 15
Disassembly ---- 188
Drive Gear Clearance ---- 15
Installation ---- 190
Maintenance ---- 188
Pressure ---- 15
Reassembly ---- 189
Removal ---- 187
Water Tank Capacity, Steam Generator ---- 5
Water Temperature ---- 506
Control (Manual) ---- 506
Water Treatment ---- 502
Weight, Locomotive ---- 4
Weight on Drivers ---- 4
Weights for Lifting ---- 16
Wheel Base ---- 4
Wheel Diameter ---- 4, 724, 734
Wheels, No. of Pairs ---- 4

ROYAL
OD 5571